Multimedia PC

A110EU SERVICE MANUAL

LCD Computer

A110EU

Service Manual

Notice

The company reserves the right to revise this publication or to change its contents without notice. Information contained herein is for reference only and does not constitute a commitment on the part of the manufacturer or any subsequent vendor. They assume no responsibility or liability for any errors or inaccuracies that may appear in this publication nor are they in anyway responsible for any loss or damage resulting from the use (or misuse) of this publication.

This publication and any accompanying software may not, in whole or in part, be reproduced, translated, transmitted or reduced to any machine readable form without prior consent from the vendor, manufacturer or creators of this publication, except for copies kept by the user for backup purposes.

Brand and product names mentioned in this publication may or may not be copyrights and/or registered trademarks of their respective companies. They are mentioned for identification purposes only and are not intended as an endorsement of that product or its manufacturer.

Version 1.0

©September 2012

Trademarks

Intel, **Celeron,** and **Intel Core** are trademarks/registered trademarks of Intel Corporation.

Windows® is a registered trademark of Microsoft Corporation.

Other brand and product names are trademarks and/or registered trademarks of their respective companies.

About this Manual

This manual is intended for service personnel who have completed sufficient training to undertake the maintenance and inspection of personal computers.

It is organized to allow you to look up basic information for servicing and/or upgrading components of the ***A110EU*** series LCD PC.

The following information is included:

Chapter 1, Introduction, provides general information about the location of system elements and their specifications.
Chapter 2, Disassembly, provides step-by-step instructions for disassembling parts and subsystems and how to upgrade elements of the system.

Appendix A, Part Lists
Appendix B, Schematic Diagrams
Appendix C, Wall Moutning Information
Appendix D, Updating the FLASH ROM BIOS

FCC Statement

(Federal Communications Commission)

You are cautioned that changes or modifications not expressly approved by the party responsible for compliance could void the user's authority to operate the equipment.

This equipment has been tested and found to comply with the limits for a Class B digital device, pursuant to Part 15 of the FCC Rules. These limits are designed to provide reasonable protection against harmful interference in a residential installation. This equipment generates, uses and can radiate radio frequency energy and, if not installed and used in accordance with the instructions, may cause harmful interference to radio communications. However, there is no guarantee that interference will not occur in a particular installation. If this equipment does cause harmful interference to radio or television reception, which can be determined by turning the equipment off and on, the user is encouraged to try to correct the interference by one or more of the following measures:

- Re orient or relocate the receiving antenna.
- Increase the separation between the equipment and receiver.
- Connect the equipment into an outlet on a circuit different from that to which the receiver is connected.
- Consult the service representative or an experienced radio/TV technician for help.

Operation is subject to the following two conditions:

1. This device may not cause interference.

   And

2. This device must accept any interference, including interference that may cause undesired operation of the device.

FCC RF Radiation Exposure Statement:

1. This Transmitter must not be co-located or operating in conjunction with any other antenna or transmitter.
2. This equipment complies with FCC RF radiation exposure limits set forth for an uncontrolled environment. This equipment should be installed and operated with a minimum distance of 20 centimeters between the radiator and your body.

Warning

Use only shielded cables to connect I/O devices to this equipment. You are cautioned that changes or modifications not expressly approved by the manufacturer for compliance with the above standards could void your authority to operate the equipment.

IMPORTANT SAFETY INSTRUCTIONS

Follow basic safety precautions, including those listed below, to reduce the risk of fire, electric shock, and injury to persons when using any electrical equipment:

1. Do not use this product near water, for example near a bath tub, wash bowl, kitchen sink or laundry tub, in a wet basement or near a swimming pool.
2. Avoid using this equipment with a telephone line (other than a cordless type) during an electrical storm. There may be a remote risk of electrical shock from lightning.
3. Do not use the telephone to report a gas leak in the vicinity of the leak.
4. Use only the power cord and batteries indicated in this manual. Do not dispose of batteries in a fire. They may explode. Check with local codes for possible special disposal instructions.
5. This product is intended to be supplied by a Listed Power Unit (Full Range AC/DC Adapter – AC Input 100 - 240V, 50 - 60Hz, DC Output 19V, 6.3A).

CAUTION

This Computer's Optical Device is a Laser Class 1 Product

Instructions for Care and Operation

The notebook computer is quite rugged, but it can be damaged. To prevent this, follow these suggestions:

1. **Don't drop it, or expose it to shock.** If the computer falls, the case and the components could be damaged.
2. **Keep it dry, and don't overheat it.** Keep the computer and power supply away from any kind of heating element. This is an electrical appliance. If water or any other liquid gets into it, the computer could be badly damaged.
3. **Follow the proper working procedures for the computer**. Shut the computer down properly and don't forget to save your work. Remember to periodically save your data as data may be lost if the battery is depleted.
4. **Avoid interference.** Keep the computer away from high capacity transformers, electric motors, and other strong magnetic fields. These can hinder proper performance and damage your data.
5. **Take care when using peripheral devices**.

Removal Warning

When removing any cover(s) and screw(s) for the purposes of device upgrade, remember to replace the cover(s) and screw(s) before restoring power to the system.

Also note the following when the cover is removed:

- Hazardous moving parts.
- Keep away from moving fan blades

Power Safety Warning

Before you undertake any upgrade procedures, make sure that you have turned off the power, and disconnected all peripherals and cables (including telephone lines and power cord). You must also remove your battery in order to prevent accidentally turning the machine on.

Power Safety

The computer has specific power requirements:

- Only use a power adapter approved for use with this computer.
- Your AC adapter may be designed for international travel but it still requires a steady, uninterrupted power supply. If you are unsure of your local power specifications, consult your service representative or local power company.
- The power adapter may have either a 2-prong or a 3-prong grounded plug. The third prong is an important safety feature; do not defeat its purpose. If you do not have access to a compatible outlet, have a qualified electrician install one.
- When you want to unplug the power cord, be sure to disconnect it by the plug head, not by its wire.
- Make sure the socket and any extension cord(s) you use can support the total current load of all the connected devices.
- Before cleaning the computer, make sure it is disconnected from any external power supplies.

Do not plug in the power cord if you are wet.	*Do not use the power cord if it is broken.*	*Do not place heavy objects on the power cord.*
	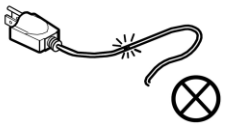	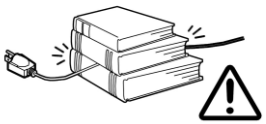

Cleaning

Do not apply cleaner directly to the computer, use a soft clean cloth.
Do not use volatile (petroleum distillates) or abrasive cleaners on any part of the computer.

Servicing

Do not attempt to service the computer yourself. Doing so may violate your warranty and expose you and the computer to electric shock. Refer all servicing to authorized service personnel. Unplug the computer from the power supply. Then refer servicing to qualified service personnel under any of the following conditions:

- When the power cord is damaged or frayed.
- If the computer has been exposed to any liquids.
- If the computer does not work normally when you follow the operating instructions.
- If the computer has been dropped or damaged (do not touch the poisonous liquid if the LCD panel breaks).
- If there is an unusual odor, heat or smoke coming from your computer.

Removal Warning

When removing any cover(s) and screw(s) for the purposes of device upgrade, remember to replace the cover(s) and screw(s) before turning the computer on.

Related Documents

You may also need to consult the following manual for additional information:

User's Manual on CD

This describes the computer's features and the procedures for operating the computer and its ROM-based setup program. It also describes the installation and operation of the utility programs provided with the computer.

System Startup

1. Remove all packing materials, CDs/DVDs and floppy disks etc.
2. Securely attach any peripherals you want to use with the computer (e.g. keyboard and mouse) to their ports.
3. Attach the AC/DC adapter to the DC-In jack located at the rear of the LCD, then plug the AC power cord into an outlet, and connect the AC power cord to the AC/DC adapter.
4. Push the power button at the front of the computer (along the bottom of the LCD) to turn the computer "on".

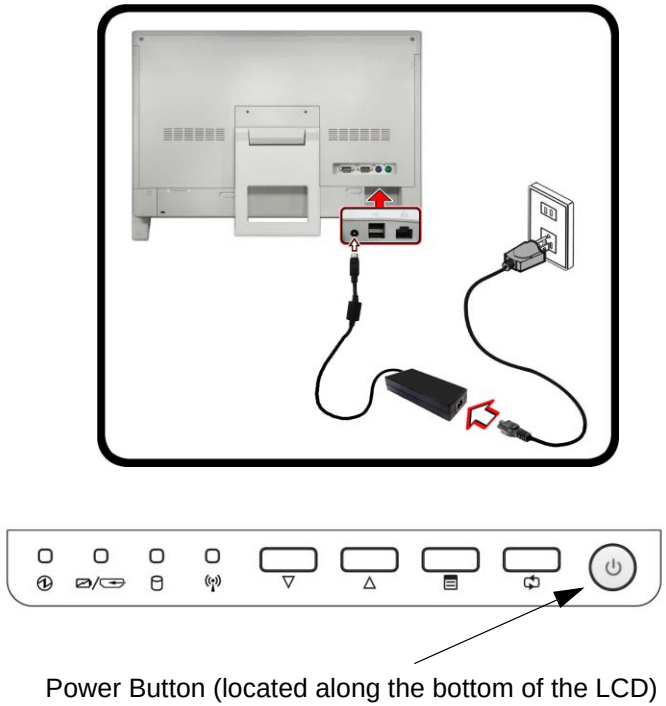

Figure 1 -
Computer with AC/DC Adapter Plugged-In/Power Button

Contents

Notice 1-II
About this Manual 1-III
FCC Statement 1-IV
FCC RF Radiation Exposure Statement: 1-V
Cleaning 1-VII
Servicing 1-VII

Introduction 1-1

Overview 1-1
Specifications 1-2
Tilting the LCD Screen & Adjusting the Height 1-4
External Locator - Front View 1-5
External Locator - Left & Right Side Views 1-6
External Locator - Rear View 1-7
Mainboard Overview - Top (Key Parts) 1-8
Mainboard Overview - Bottom (Key Parts) 1-9
Mainboard Overview - Top (Connector) 1-10
Mainboard Overview - Bottom (Connectors) 1-11

Disassembly 2-1

Overview 2-1
Maintenance Tools 2-2
Connections 2-2
Maintenance Precautions 2-3
Disassembly Steps 2-4
Removing and Installing the Battery 2-5
Removing the Rear Top Cover 2-7
Removing the Hard Disk Drive 2-8
Hard Disk Upgrade Process 2-8
Removing the Optical (CD/DVD) Device 2-13
Upgrading the System Memory (RAM) 2-14
Removing the Stand 2-16
Removing the Wireless LAN Module 2-17
Removing the CPU 2-18

Part Lists A-1

Part List Illustration Location A-2
Front A-3
Front (No CCD) A-4
MB A-5
Back A-6
HDD A-7
DVD A-8
Combo A-9

Schematic Diagrams B-1

System Block Diagram B-2
Processor 1/7 ..... B-3
Processor 2/7 ..... B-4
Processor 3/7 ..... B-5
Processor 4/7 ..... B-6
Processor 5/7 ..... B-7
Processor 6/7 ..... B-8
Processor 7/7 ..... B-9
DDR3 SO-DIMM_0 ..... B-10
DDR3 SO-DIMM_1 ..... B-11
PCH PCI B-12
PCH USB/PCIE/DMI B-13
PCH SATA B-14
PCH GPIO/HDA B-15
PCH NVRAM/HDMI B-16
PCH FDI/USB3/Clock B-17

PCH Power B-18
PCH Power B-19
PCH GND B-20
LVDS, Inverter B-21
SCALAR B-22
SCALAR-1 ..... B-23
HDMI IN, USB2.0*2 ..... B-24
HDMI OUT B-25
KBC-ITE IT8518 ..... B-26
Audio Codec ALC269 ..... B-27
AMP2607 & Audio Switch B-28
Card Reader / RTS5229 ..... B-29
LAN (Intel LAN82579) B-30
LAN CON/New Card B-31
HDD/ODD/ESATA B-32
USB3.0 ..... B-33
WLAN/TPM1.2/CCD/TP B-34
5VS, 3VS, 1.5VS_CPU, 12V B-35
3.3V_M, 1.05V_M, 1.05VS_VTT B-36
COM Port / PS2 ..... B-37
VDD3, VDD5 ..... B-38
Power 0.925V/1.8VS B-39
Power 1.5V/1.05VS B-40
Power VCORE1 ..... B-41
Power VCORE2 ..... B-42
AC-In, Charger B-43
Audio/USB Board B-44
Power SW LED CIR Board B-45
Power Sequence B-46

Wall Mounting Guide C-1

Removing the Stand C-2
Mounting Systems C-3
General Guidelines for Wall Mounting C-4
Mounted System Example C-5

Updating the FLASH ROM BIOS D-1

Download the BIOS D-1
Unzip the downloaded files to a bootable CD/DVD/ or
USB Flash drive D-1
Set the computer to boot from the external drive D-1
Use the flash tools to update the BIOS D-2
Restart the computer (booting from the HDD) D-2

Chapter 1: Introduction

Overview

This manual covers the information you need to service or upgrade the ***A110EU*** series LCD computer. Information about operating the computer (e.g. getting started, and the *Setup* utility) is in the *User's Manual*. Information about drivers (e.g. VGA & audio) is also found in *User's Manual*. That manual is shipped with the computer.

Operating systems (e.g. *Windows 7*, etc.) have their own manuals as do application software (e.g. word processing and database programs). If you have questions about those programs, you should consult those manuals.

The ***A110EU*** series computer is designed to be upgradeable. See ***Disassembly 2 on page 2 - 1*** for a detailed description of the upgrade procedures for each specific component. Please note the warning and safety information indicated by the " " symbol.

The balance of this chapter reviews the computer's technical specifications and features.

Specifications

Latest Specification Information

The specifications listed here are correct at the time of sending them to the press. Certain items (particularly processor types/speeds) may be changed, delayed or updated due to the manufacturer's release schedule. Check with your service center for more details.

CPU

The CPU is not a user serviceable part. Accessing the CPU in any way may violate your warranty.

Processor Options

Intel® Core™ i7 Processor

i7-3770S (3.10GHz)

8MB L3 Cache, **22nm**, DDR3-1600MHz, TDP 65W

i7-3570S (3.10GHz)

6MB L3 Cache, **22nm**, DDR3-1600MHz, TDP 65W

Intel® Core™ i5 Processor

i5-3550S (3.00GHz), i5-3475S (2.90GHz), i5-3470S (2.90GHz), i5-3450S (2.80GHz), i5-3570T (2.30GHz)

6MB L3 Cache, **22nm**, DDR3-1600MHz, TDP 65W

Intel® Pentium® Processor

G640 (2.80GHz)

3MB L3 Cache, **22nm**, DDR3-1066MHz, TDP 65W

Intel® Celeron® Processor

G540 (2.50GHz)

2MB L3 Cache, **22nm**, DDR3-1066MHz, TDP 65W

Core Logic

Intel® HM61 Chipset

BIOS

One 48Mb SPI Flash ROM

AMI BIOS

Memory

Two 204 Pin SO-DIMM Sockets Supporting **DDR3 1333/1600MHz** Memory

Memory Expandable up to 8GB

Storage

(**Factory Option**) One Changeable 12.7mm(h) Optical Device Type Drive (Super Multi Drive Module or

Blu-Ray Combo Drive Module)

One Changeable 2.5" 9.5mm (h) **SATA** (Serial) HDD

One Changeable 3.5" 25mm (h) **SATA** (Serial) HDD

Video Adapter

Intel Integrated GPU

(GPU is Dependent on Processor)

Intel® HD Graphics

Dynamic Frequency (Intel Dynamic Video Memory Technology for up to **1.7GB**)

Microsoft DirectX®10 Compatible

Intel® HD Graphics 2500

Dynamic Frequency (Intel Dynamic Video Memory Technology for up to **1.7GB**)

Microsoft DirectX®11 Compatible

Intel® HD Graphics 4000

Dynamic Frequency (Intel Dynamic Video Memory Technology for up to **1.7GB**)

Microsoft DirectX®11 Compatible

LCD

21.5" (54,61cm) FHD

Audio

High Definition Audio Compliant Interface

Built-In Microphone

2 * Built-In Speakers

Security

BIOS Password

Security (Kensington® Type) Lock Slot

TPM 1.2

Interface

Four USB 2.0 Ports
Two USB 3.0 Ports
One HDMI-In Port
One HDMI-Out Port
One Headphone-Out Jack
One Microphone-In Jack
Two RS232 Serial (COM) Ports
Two PS/2 Ports
One RJ-45 LAN Jack
One DC-in Jack

Slots

One Slot for **WLAN** Module or **Combo WLAN and Bluetooth** Module
One ExpressCard/34(54) Slot

Card Reader

Embedded Multi-in-1 Card Reader
- MMC (MultiMedia Card) / RS MMC
- SD (Secure Digital) / Mini SD / SDHC/ SDXC
- MS (Memory Stick) / MS Pro / MS Duo

Communication

Built-In Gigabit Ethernet LAN
(**Factory Option**) 2.0M FHD PC Camera Module

WLAN/ Bluetooth Half Mini-Card Modules:

(**Factory Option**) Intel® Centrino® Wireless-N 2230 Wireless LAN (**802.11b/g/n**) + Bluetooth **4.0**
(**Factory Option**) Third-Party Wireless LAN (**802.11b/g/n**)
(**Factory Option**) Third-Party Wireless LAN (**802.11b/g/n**) + Bluetooth 4.0

Power

Full Range AC/DC Adapter
AC Input: 100 - 240V, 50 - 60Hz
DC Output: 19V, 6.3A (**120W**)

(**Factory Option**) 6 Cell Smart Lithium-Ion Battery Pack, 62.16WH

Envionmental Spec

Temperature
Operating: 5°C - 35°C
Non-Operating: -20°C - 60°C
Relative Humidity
Operating: 20% - 80%
Non-Operating: 10% - 90%

Dimensions & Weight

525mm (w) * 49mm (d) * 418mm (h))
Around 7kg (with ODD)

Tilting the LCD Screen & Adjusting the Height

It is possible to tilt the LCD screen in order to get the best possible viewing angle of the screen without glare etc.

- Place one hand at the top of the computer (1), and use the other to open the stand (2) to an angle of around 15 degrees from the vertical position (the stand will allow you to adjust to the appropriate angle if you pull it out and let it spring back).
- Apply pressure with one hand at the top (at point (3)) of the computer (while holding on to the side with the other hand) to carefully push the LCD screen down in order to tilt it to the appropriate viewing angle (**up to 50 degrees from the vertical position**).
- Use one hand at the top of the computer (while holding on to the side with the other hand) to move the computer back to the original position

Adjust the stand to tilt the computer to 15° from the vertical position.

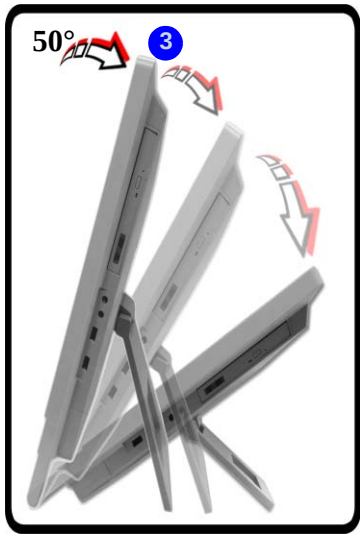

Apply pressure from the top of the screen to adjust the stand outwards (up to 50° from the vertical position).

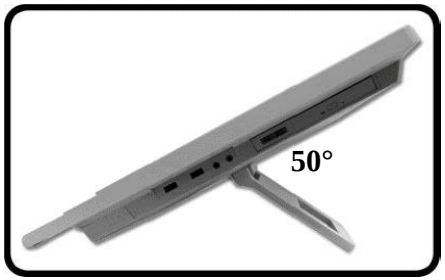

Figure 1
Adjust the Stand/LCD Screen Tilt

Moving the Computer

We strongly recommend using both hands to move the computer. You can use one hand to grip the computer by the stand, and the other to hold the top of the LCD screen.

It is recommended that you carry the computer with the LCD facing your body to avoid scratching the surface against other objects. However take care not to scratch the LCD with any personal items, belt fittings or jewelry etc.(one hand gripping the stand and the other gripping the top of the computer to avoid accidentally dropping it).

External Locator - Front View

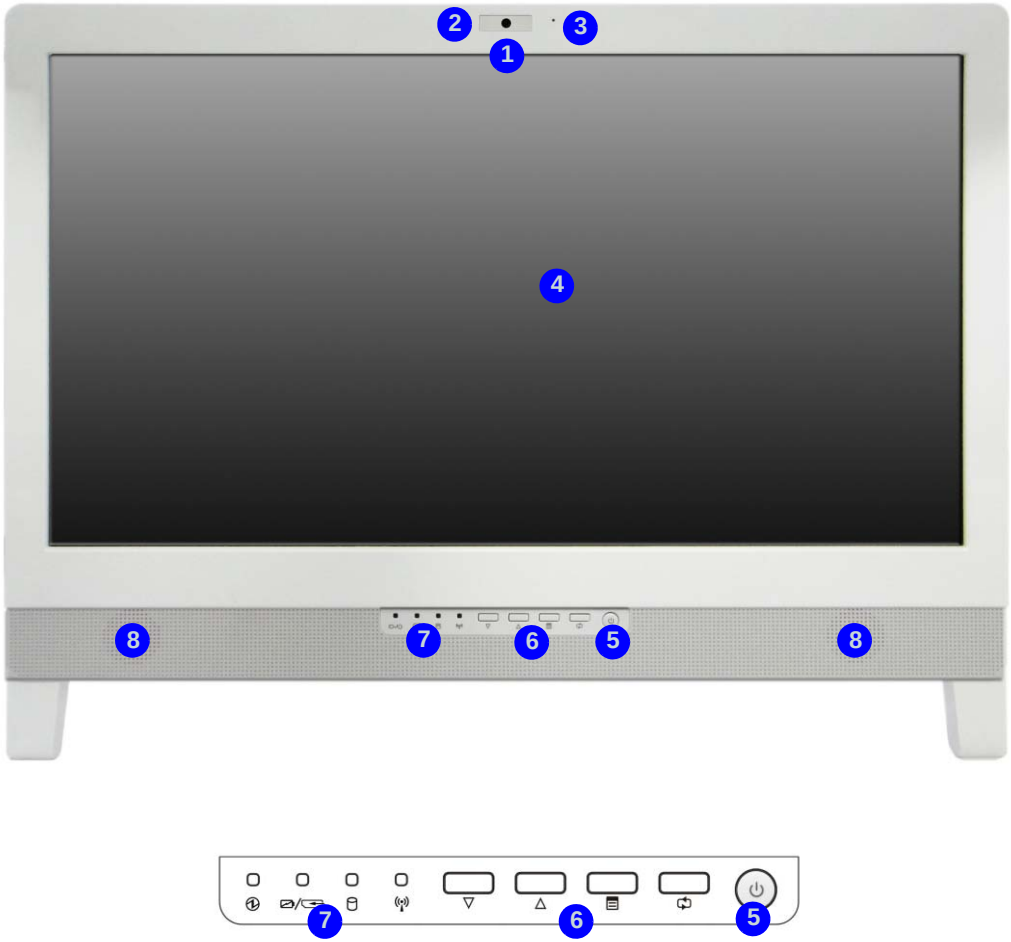

Figure 2
Front View

1. PC Camera (**Optional**)
2. PC Camera LED
3. Built-In Microphone
4. LCD (With **Optional** Touch Panel)
5. Power Button
6. Function Buttons
7. Power & System Activity LED Indicators
8. Speakers

External Locator - Left & Right Side Views

Figure 3
Left & Right Side Views

1. Stand
2. Multi-in-1 Card Reader
3. ExpressCard Slot /54(34)
4. 2 * USB 3.0 Port
5. HDMI-In Port
6. HDMI-Out Port
7. Emergency Eject Hole
8. Optical Device Drive Bay
9. Headphone-Out Jack
10. Microphone-In Jack
11. USB 2.0 Port
12. Stand

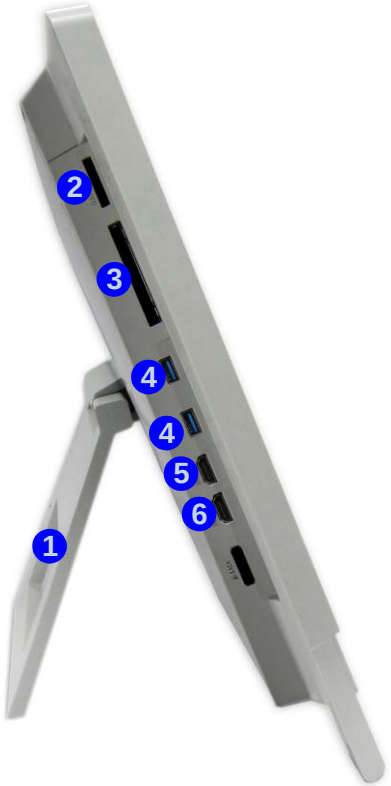

ExpressCard Slot

The ExpressCard Slot accepts either **ExpressCard/34** or **ExpressCard/54** formats.

Multi-in-1 Card Reader

The card reader allows you to use the most popular digital storage card formats:

MMC (MultiMedia Card) / SD (Secure Digital) / MS (Memory Stick) / MS Pro (Memory Stick Pro) / MS Duo (requires PC adapter) / Mini SD (requires PC adapter) / RS MMC (requires PC adapter)

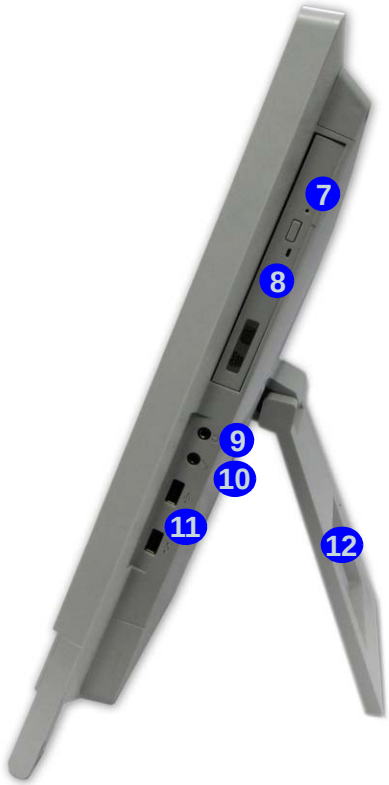

External Locator - Rear View

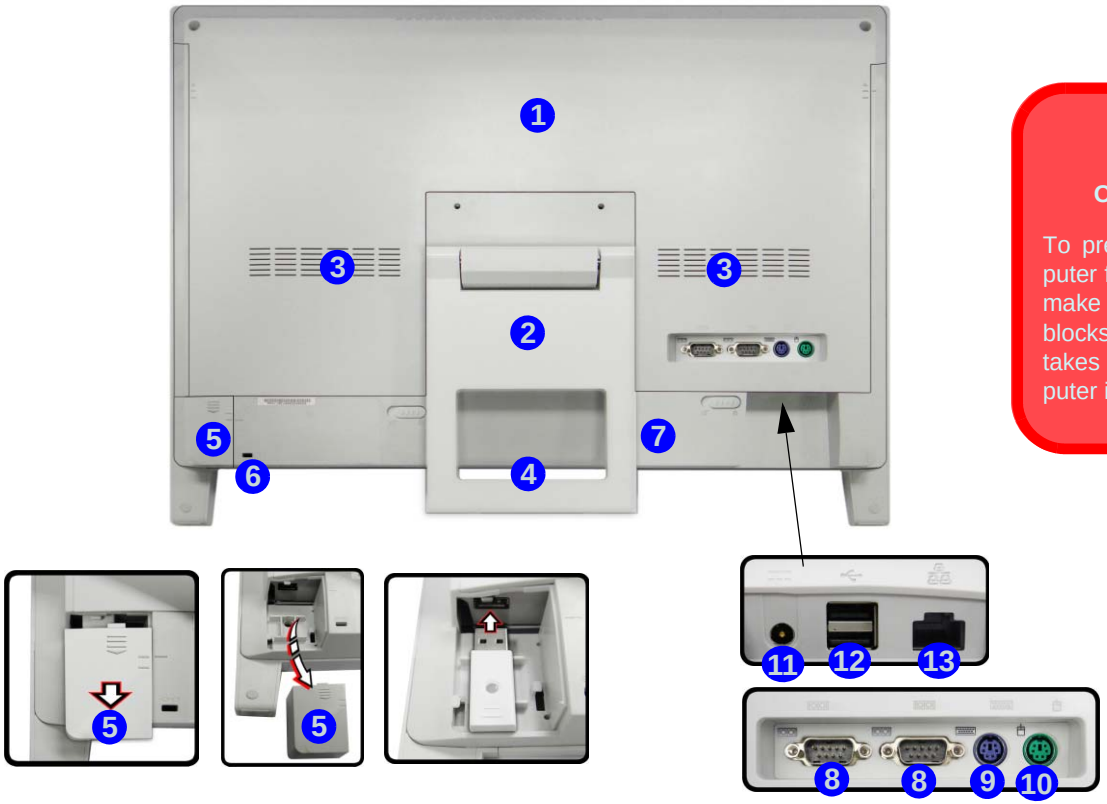

Overheating

To prevent your computer from overheating make sure nothing blocks the vent/fan intakes while the computer is in use.

Figure 4
Rear View

1. Rear Component Cover
2. Stand
3. Vent/Fan Intake
4. Carrying Handle Area
5. USB Wireless Transceiver Cover (for Optional RF Keyboard & Mouse Kit)
6. Security Lock Slot
7. Battery
8. 2 * RS-232 Serial Ports
9. PS/2 Port (keyboard)
10. PS/2 Port (mouse)
11. DC-In Jack
12. 2 * USB Ports
13. RJ-45 LAN Port

USB Port for Wireless Transceiver

Note that the USB port for the wireless transceiver is designed specifically for the **optional** RF Keyboard & Mouse kit supplied with this model only.

Do not use any other USB devices in this port.

Mainboard Overview - Top (Key Parts)

Figure 5
Mainboard Top Key Parts

1. ExpressCard/34/54 Slot
2. TUSB7320
3. TSUMU88ADT3
4. KBC-ITE IT8518
5. Platform Controller Hub

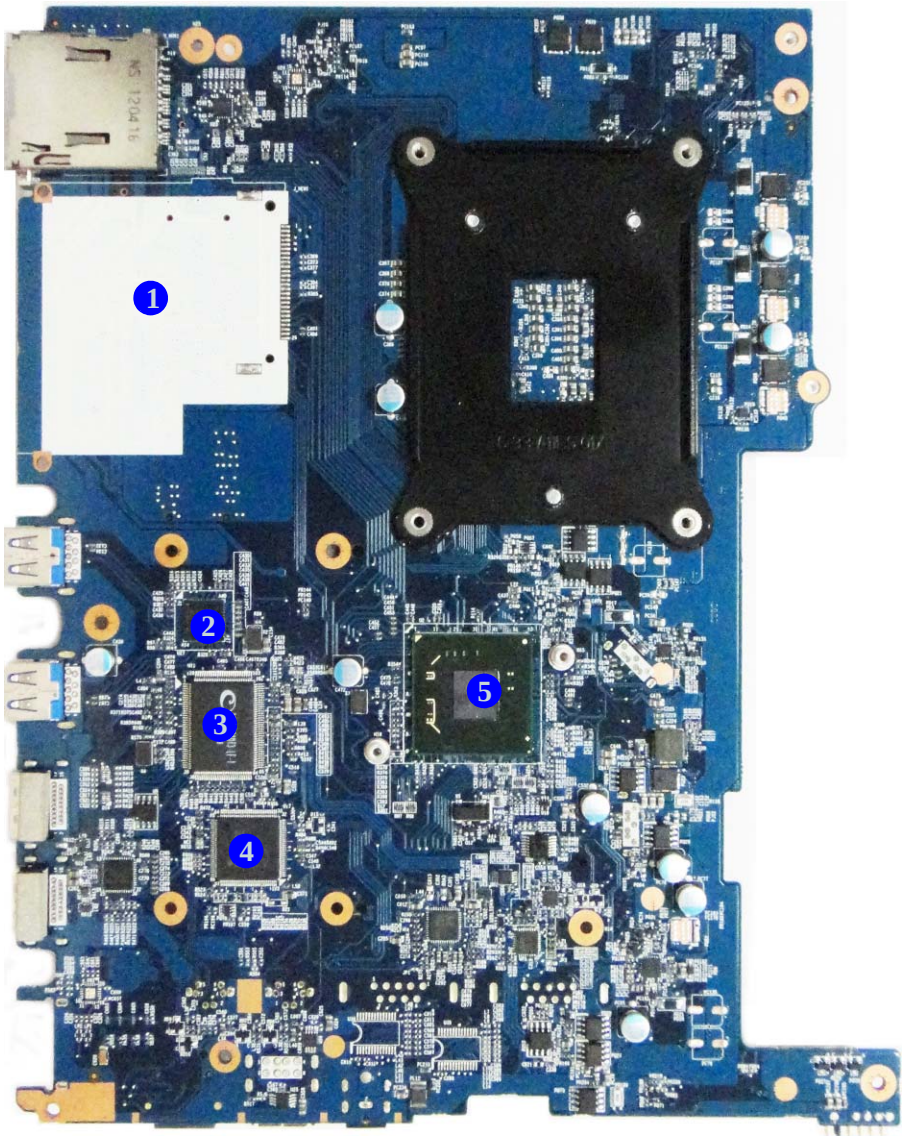

Mainboard Overview - Bottom (Key Parts)

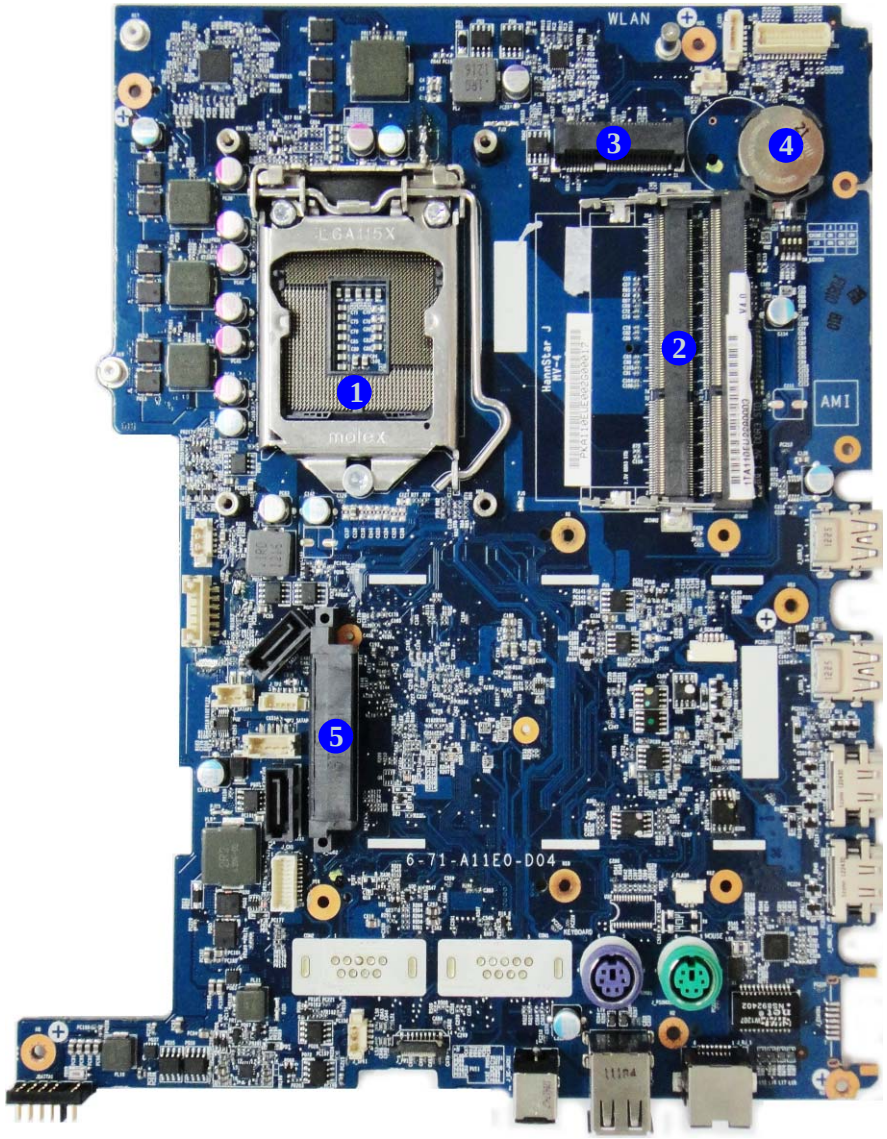

Figure 6
Mainboard Bottom Key Parts

1. CPU Socket (CPU uninstalled)
2. Memory Slots DDR3 SO-DIMM
3. Mini-Card Connector (WLAN Module)
4. Coin Battery
5. HDD/SDD Connector

Mainboard Overview - Top (Connector)

Figure 7
Mainboard Top Connector

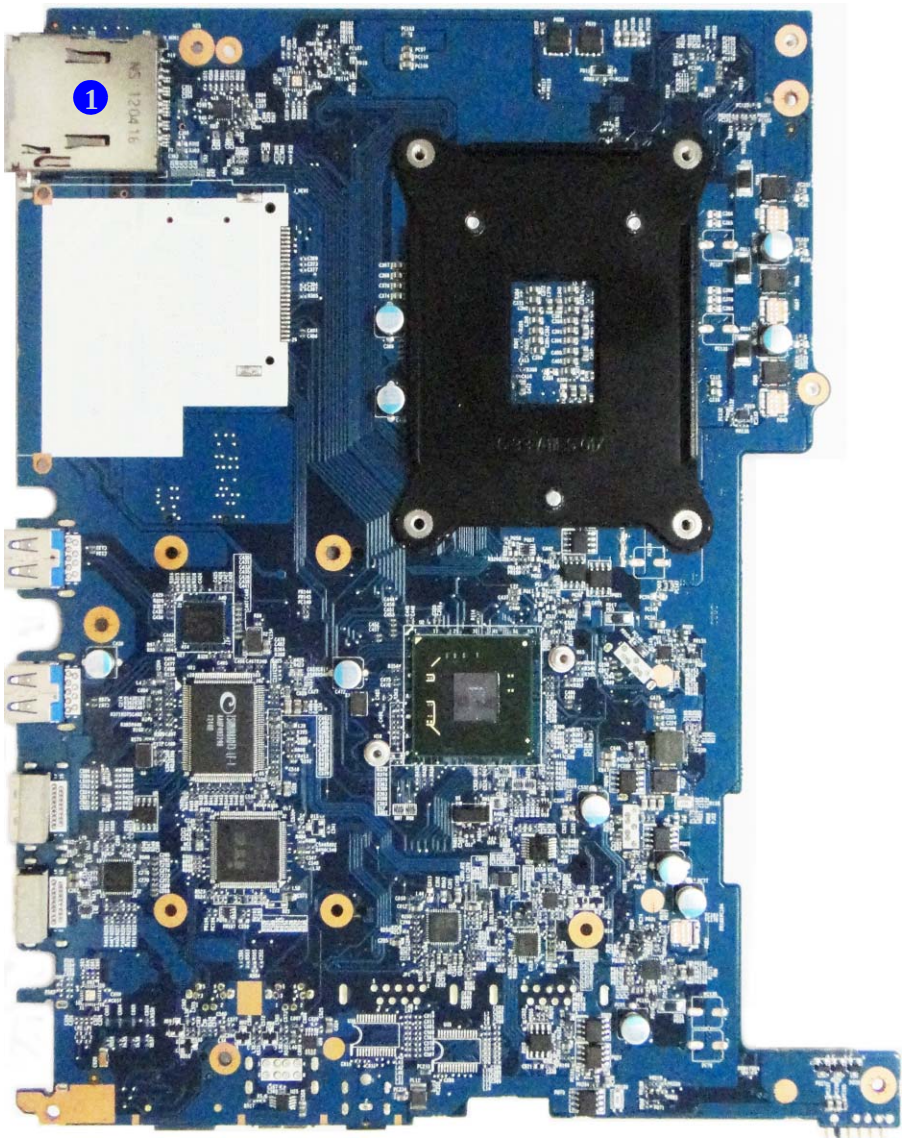

1. Multi-in-1 Card Reader

Mainboard Overview - Bottom (Connectors)

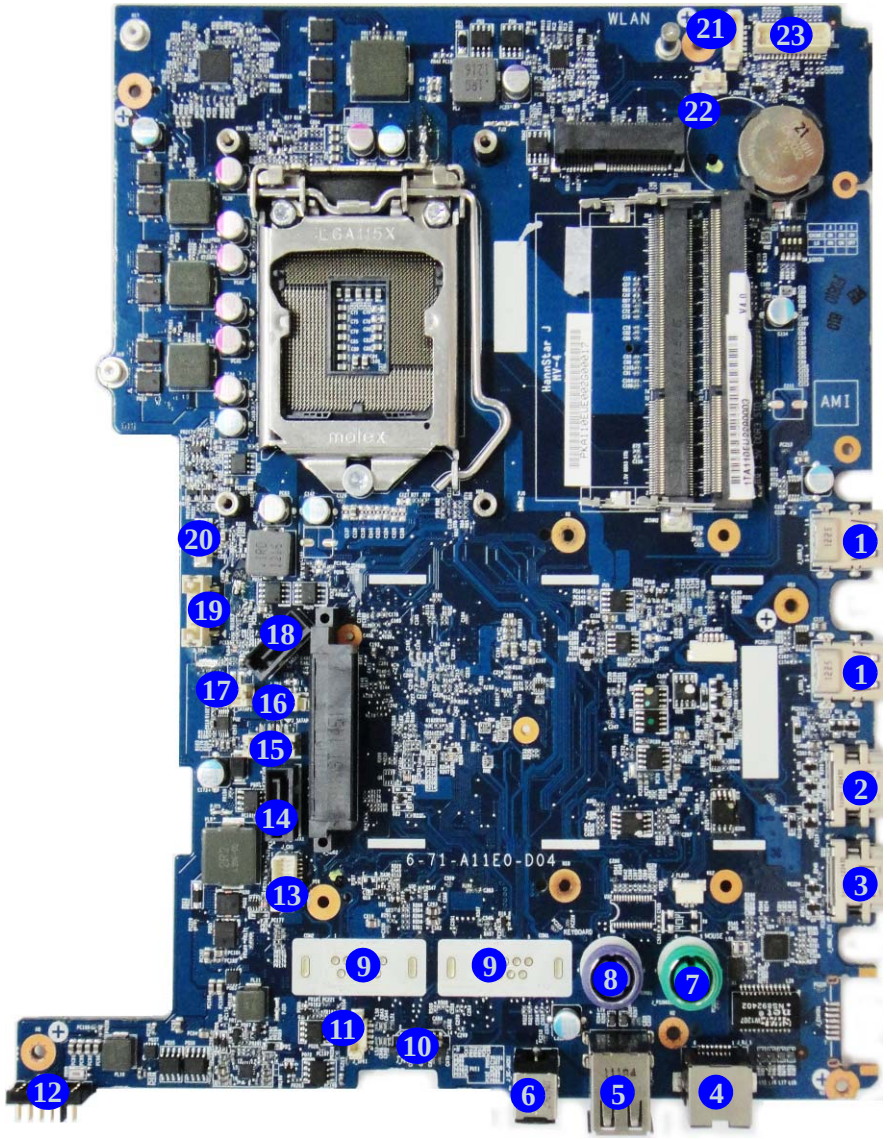

Figure 8
Mainboard Bottom Connectors

1. USB 3.0 Ports
2. HDMI-In Port
3. HDMI-Out Port
4. RJ-45 Lan Jack
5. USB 3.0 Port
6. DC-In Jack
7. PS/2 Port (keyboard)
8. PS/2 Port (mouse)
9. Serial Ports
10. Power Switch Cable Connector
11. Speaker Cable Connector
12. Battery Connector
13. CN1 Connector
14. SATA Connector 1
15. SATAP Connector
16. TP Connector
17. SATAP1 Connector
18. SATA Connector 2
19. Inverter Connector
20. CPU Fan Cable Connector
21. CCD Cable Connector
22. MIC Cable Connector
23. LCD Cable Connector

Chapter 2: Disassembly

Overview

This chapter provides step-by-step instructions for disassembling the ***A110EU*** series LCD computer's parts and subsystems. When it comes to reassembly, reverse the procedures (unless otherwise indicated).

We suggest you completely review any procedure before you take the computer apart.

Procedures such as upgrading/replacing the RAM, optical device and hard disk are included in the User's Manual but are repeated here for your convenience.

To make the disassembly process easier each section may have a box in the page margin. Information contained under the figure # will give a synopsis of the sequence of procedures involved in the disassembly procedure. A box with a lists the relevant parts you will have after the disassembly process is complete. **Note**: The parts listed will be for the disassembly procedure listed ONLY, and not any previous disassembly step(s) required. Refer to the part list for the previous disassembly procedure. The amount of screws you should be left with will be listed here also.

A box with a will also provide any possible helpful information. A box with a contains warnings.

An example of these types of boxes are shown in the sidebar.

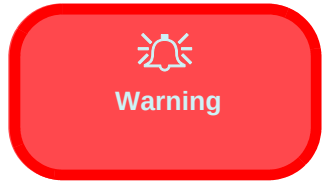

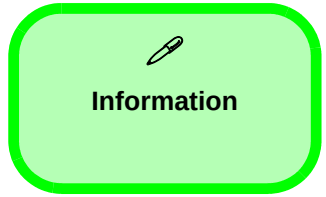

NOTE: All disassembly procedures assume that the system is turned **OFF**, and disconnected from any power supply.

Maintenance Tools

The following tools are recommended when working on the notebook PC:

- M3 Philips-head screwdriver
- M2.5 Philips-head screwdriver (magnetized)
- M2 Philips-head screwdriver
- Small flat-head screwdriver
- Pair of needle-nose pliers
- Anti-static wrist-strap

Connections

Connections within the computer are one of four types:

Locking collar sockets for ribbon connectors	To release these connectors, use a small flat-head screwdriver to gently pry the locking collar away from its base. When replacing the connection, make sure the connector is oriented in the same way. The pin1 side is usually not indicated.
Pressure sockets for multi-wire connectors	To release this connector type, grasp it at its head and gently rock it from side to side as you pull it out. Do not pull on the wires themselves. When replacing the connection, do not try to force it. The socket only fits one way.
Pressure sockets for ribbon connectors	To release these connectors, use a small pair of needle-nose pliers to gently lift the connector away from its socket. When replacing the connection, make sure the connector is oriented in the same way. The pin1 side is usually not indicated.
Board-to-board or multi-pin sockets	To separate the boards, gently rock them from side to side as you pull them apart. If the connection is very tight, use a small flat-head screwdriver - use just enough force to start.

Maintenance Precautions

The following precautions are a reminder. To avoid personal injury or damage to the computer while performing a removal and/or replacement job, take the following precautions:

1. **Don't drop it**. Perform your repairs and/or upgrades on a stable surface. If the computer falls, the case and other components could be damaged.
2. **Don't overheat it**. Note the proximity of any heating elements. Keep the computer out of direct sunlight.
3. **Avoid interference**. Note the proximity of any high capacity transformers, electric motors, and other strong magnetic fields. These can hinder proper performance and damage components and/or data. You should also monitor the position of magnetized tools (i.e. screwdrivers).
4. **Keep it dry**. This is an electrical appliance. If water or any other liquid gets into it, the computer could be badly damaged.
5. **Be careful with power**. Avoid accidental shocks, discharges or explosions.
   - Before removing or servicing any part from the computer, turn the computer off and detach any power supplies.
   - When you want to unplug the power cord or any cable/wire, be sure to disconnect it by the plug head. Do not pull on the wire.
6. **Peripherals** – Turn off and detach any peripherals.
7. **Beware of static discharge**. ICs, such as the CPU and main support chips, are vulnerable to static electricity. Before handling any part in the computer, discharge any static electricity inside the computer. When handling a printed circuit board, do not use gloves or other materials which allow static electricity buildup. We suggest that you use an anti-static wrist strap instead.
8. **Beware of corrosion**. As you perform your job, avoid touching any connector leads. Even the cleanest hands produce oils which can attract corrosive elements.
9. **Keep your work environment clean**. Tobacco smoke, dust or other air-born particulate matter is often attracted to charged surfaces, reducing performance.
10. **Keep track of the components**. When removing or replacing any part, be careful not to leave small parts, such as screws, loose inside the computer.

Power Safety Warning

Before you undertake any upgrade procedures, make sure that you have turned off the power, and disconnected all peripherals and cables (including telephone lines).

Removal Warning

When removing any cover(s) and screw(s) for the purposes of device upgrade, remember to replace the cover(s) and screw(s) before turning the computer on.

Cleaning

Do not apply cleaner directly to the computer, use a soft clean cloth.
Do not use volatile (petroleum distillates) or abrasive cleaners on any part of the computer.

Disassembly Steps

The following table lists the disassembly steps, and on which page to find the related information. **PLEASE PERFORM THE DISASSEMBLY STEPS IN THE ORDER INDICATED.**

To remove the Battery:

1. Remove the battery *page 2 - 5*
2. Install the battery *page 2 - 6*

To remove the Rear Top Cover:

1. Remove the rear top cover *page 2 - 7*

To remove the Hard Disk Drive:

1. Remove the rear top cover *page 2 - 7*
2. Remove the HDD *page 2 - 8*

To remove the Optical Device:

1. Remove the rear top cover *page 2 - 7*
2. Remove the optical device *page 2 - 13*

To remove and install the System Memory:

1. Remove the rear top cover *page 2 - 7*
2. Remove the system memory *page 2 - 14*

To remove the Stand:

1. Remove the rear top cover *page 2 - 7*
2. Remove the stand *page 2 - 16*

To remove the WLAN Module:

1. Remove the rear top cover *page 2 - 7*
2. Remove the WLAN module *page 2 - 17*

To remove the CPU:

1. Remove the rear top cover *page 2 - 7*
2. Remove the CPU *page 2 - 18*
3. Install the CPU *page 2 - 20*

Removing and Installing the Battery

Battery Removal Procedure

1. Turn the computer **off**, remove the AC/DC adapter. Access the rear of the computer.
2. Slide the latch 1 in the direction of the arrow (***Figure 1a***).
3. Slide the latch 2 in the direction of the arrow, and hold it in place (***Figure 1a***).
4. Slide the cover in the direction of the arrow until the bottom marker of the battery cover icon 3 is aligned with the marker on the side of the computer 4 (***Figure 1a***).
5. Remove the batter bay cover 5 (***Figure 1b***).
6. Raise the battery up out of the bay 6 (***Figure 1c***).
7. Remove the battery 7 (***Figure 1d***).

Figure 1
Battery Removal

a. Slide the latch and hold it in place.
b. Remove the battery bay cover.
c. Raise the battery up out of the bay
d. Remove the battery.

a.

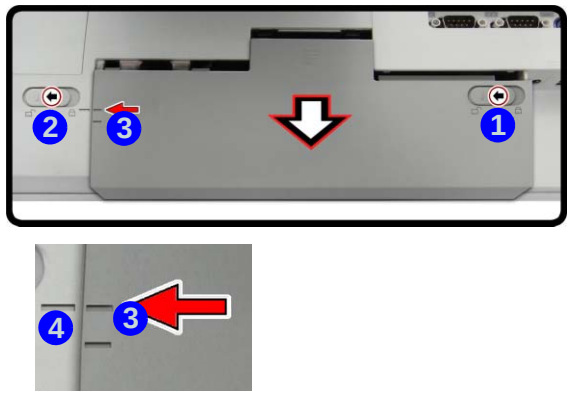

b.

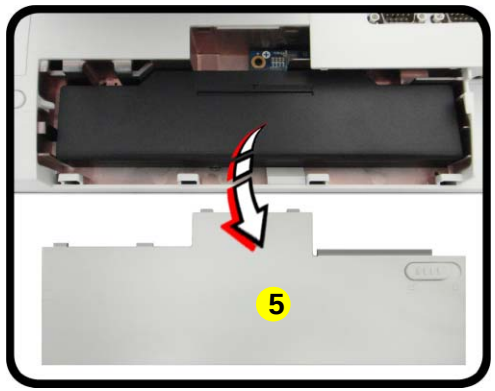

c.

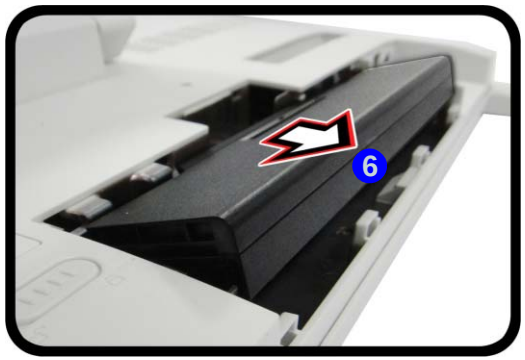

d.

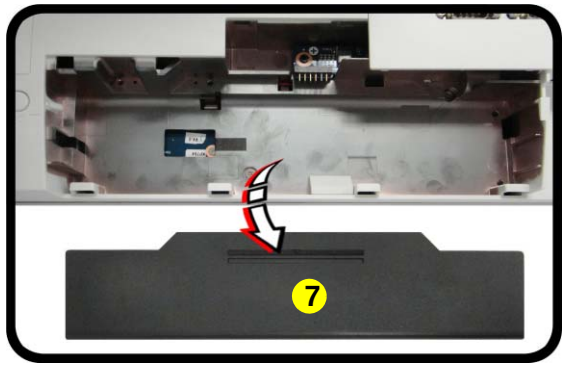

5. Battery Bay Cover
7. Battery

Figure 2
Battery Installation

a. Insert the battery.
b. Insert the battery bay cover.
c. Slide the latches towards the lock symbols.

Battery Installation Procedure

1. Insert the battery 1 at an angle and slide it firmly into the battery bay until connected (***Figure 2a***).
2. Insert the battery bay cover 2 by angling it to fit on the right 3 at first, and then click the left side into place 4 (***Figure 2b***).
3. Slide the cover in the direction of the arrow 5 until the top marker of the battery cover icon 6 is aligned with the marker on the side of the computer 7 (***Figure 2c***).
4. Slide the latches 8 towards the lock symbols to lock the cover in place (***Figure 2c***).

a.

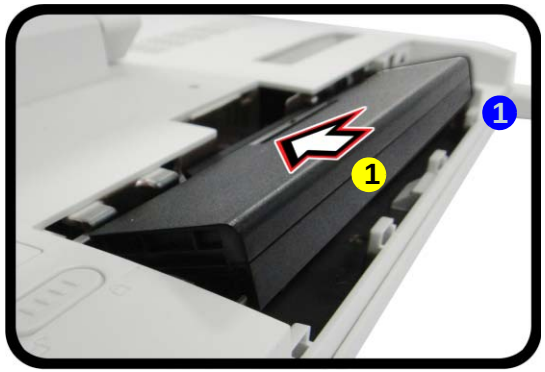

b.

c.

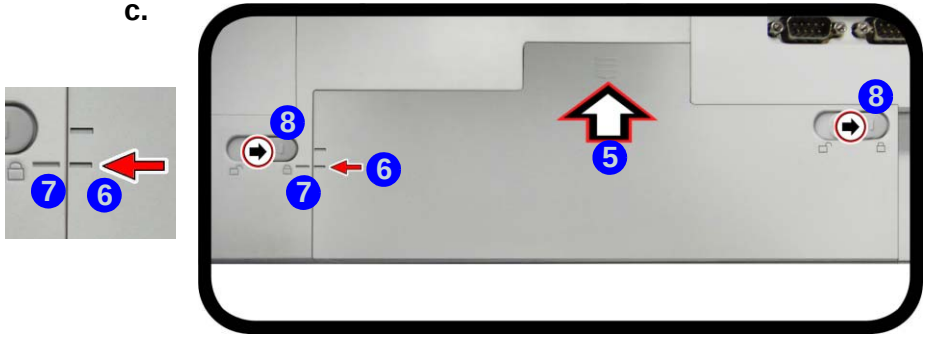

1. Battery
2. Battery Bay Cover

Removing the Rear Top Cover

Before undertaking any upgrade procedure it is necessary to remove the rear top cover to access the components.

1. Turn **off** the computer and disconnect all cables and peripherals.
2. Carefully place the computer flat with the LCD facing down (make sure you cover the LCD to avoid scratches) so that you may access the rear cover.
3. Remove screws A & B (*Figure 3a*).
4. Slide the rear top cover in the direction of the arrow C until the bottom marker of the rear cover icon is aligned with the marker on the side of the computer D (*Figure 3b*).
5. Carefully remove the rear cover E and set it aside (*Figure 3c*).

Figure 3
Rear Top Cover Removal

a. Remove the screws.
b. Slide the rear top cover to unlock.
c. Remove the rear top cover.

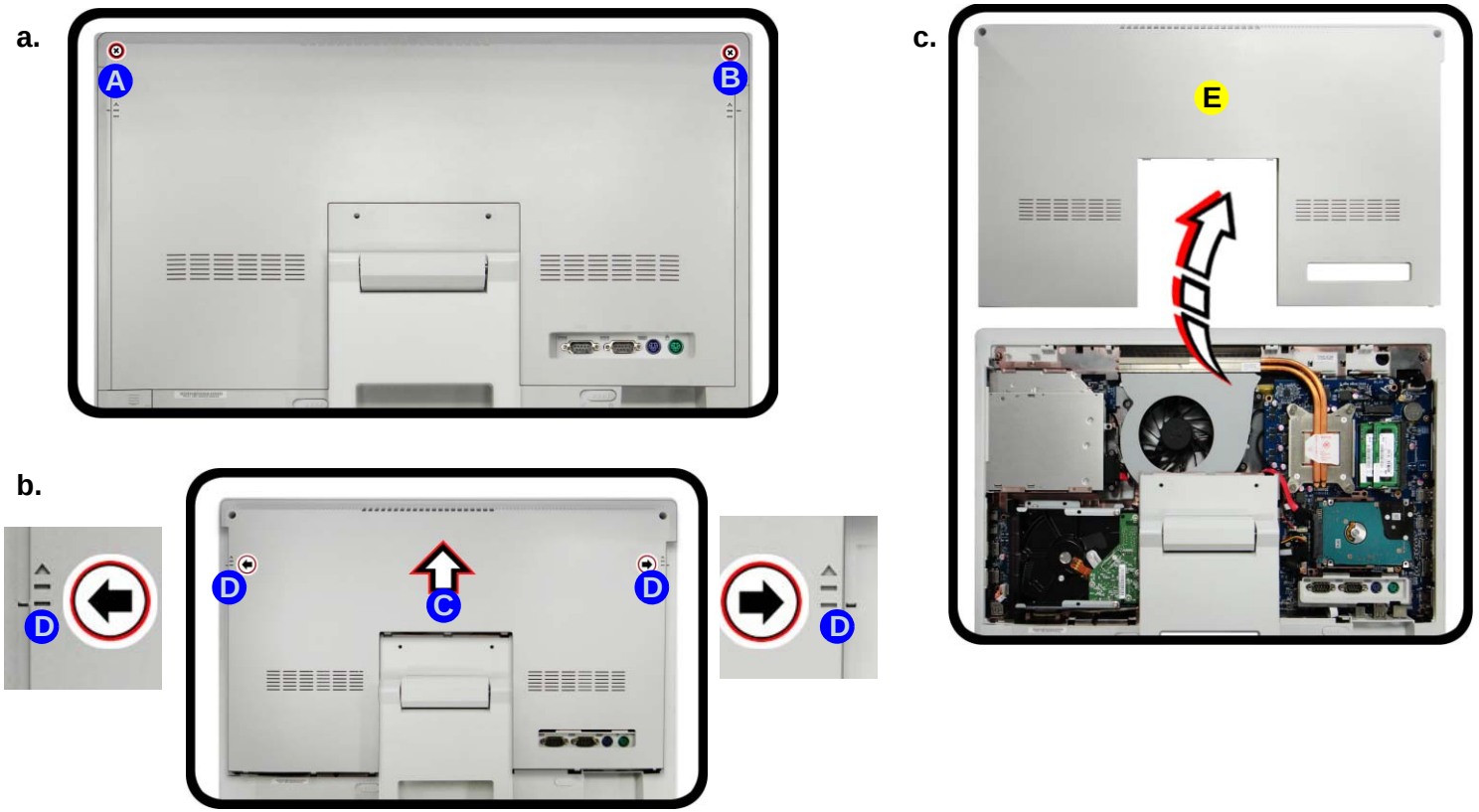

E. Rear Top Cover

- 4 Screws

Figure 4
3.5” HDD Removal

a. Locate the hard disk assembly
b. Remove the screws.
c. Slide the hard disk in the direction of the arrows.

Removing the Hard Disk Drive

The hard disk drive can be taken out to accommodate other 2.5" serial (SATA) hard disk drives with a height of 9.5mm (h). Follow your operating system’s installation instructions, and install all necessary drivers and utilities (as outlined in **Chapter 4 of the User’s Manual**) when setting up a new hard disk.

Hard Disk Upgrade Process

Removing the 3.5" (88.9mm) HDD

1. Remove the battery (***page 2 - 5***) and rear top cover (***page 2 - 7***).
2. The hard disk is located at point 1 (***Figure 4a***).
3. Remove screws 2 - 5 (***Figure 4b***).
4. Slide the hard disk assembly in the direction of arrow 6 (***Figure 4c***).

a.

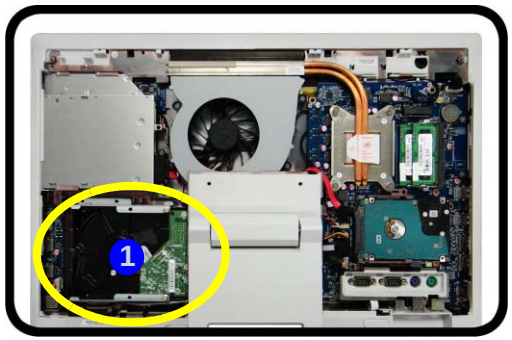

c.

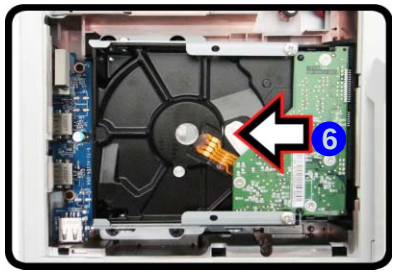

b.

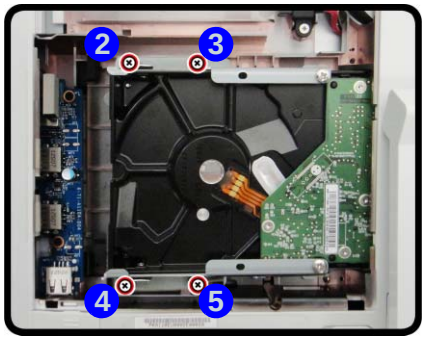

7. Hard Disk Assembly

- 4 Screws

Hard Disk Slot

Make sure you install the hard disk into the lower slot on the mainboard.

HDD System Warning

New HDD’s are blank. Before you begin make sure:

You have backed up any data you want to keep from your old HDD.

You have all the CD-ROMs and FDDs required to install your operating system and programs.

If you have access to the internet, download the latest application and hardware driver updates for the operating system you plan to install. Copy these to a removable medium.

5. Lift the hard disk assembly 7 out of the computer (*Figure 5d*).
6. Remove screws 8 - 13 from the hard disk bracket (*Figure 5e*).
7. Remove the left and right side brackets 14 from the HDD 15.
8. Reverse the process to install a new hard disk.

Figure 5
3.5" HDD Removal (cont'd.)

d. Remove the hard disk assembly.
e. Remove the screws

d.

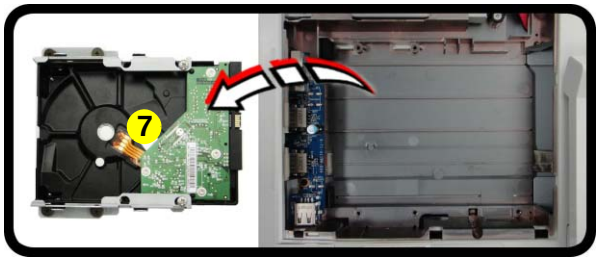

e.

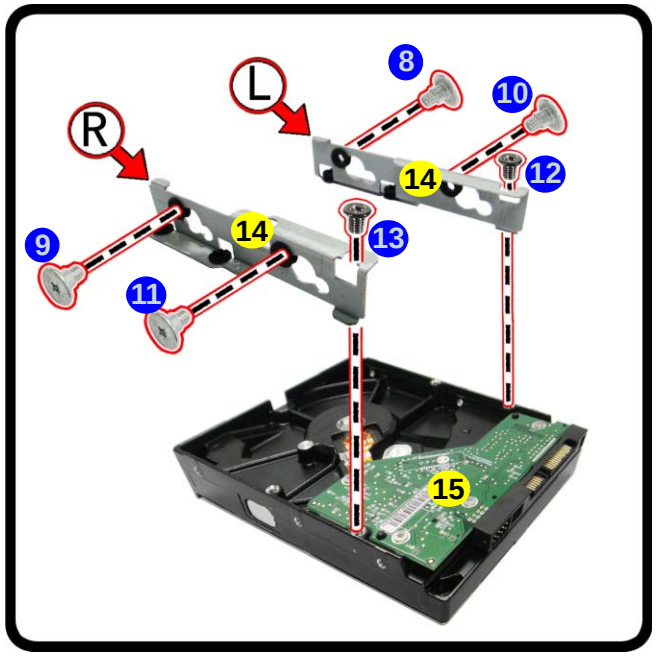

7. Hard Disk Assembly
14. Side Brackets
15. Hard Disk

- 6 Screws

Figure 6
2.5” HDD or SSD Removal

a. Locate the hard disk assembly
b. Remove the screws.
c. Lift the hard disk assembly out of the computer.

Removing the 2.5" (63.5mm) HDD or SSD

1. Remove the battery (***page 2 - 5***) and rear top cover (***page 2 - 7***).
2. The hard disk is located at point 1 (***Figure 7a***).
3. Remove screws 2 & 3 from the bracket (make sure you **use a small manual screwdriver** and not an electrical screwdriver to do this, due to the delicate nature of the screws).
4. Lift the HDD assembly 4 out of the computer.

a.

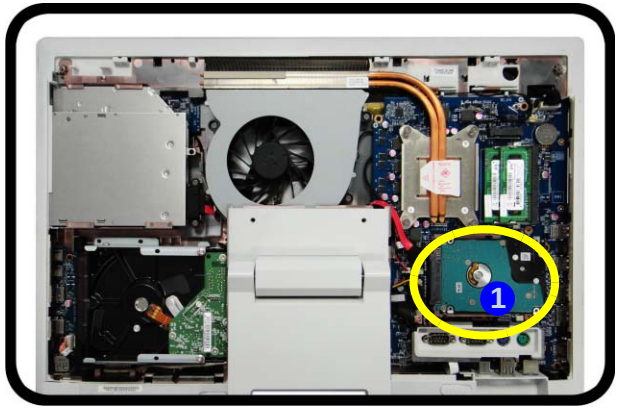

b.

c.

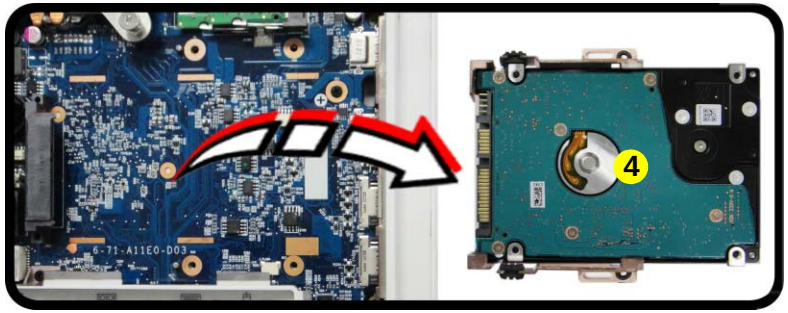

4. Hard Disk Assembly

- 2 Screws

Removing the 2.5" (63.5mm) HDD from the Bracket

5. Remove screws 5 & 6 and separate the bracket 7 from the HDD 8.
6. Reverse the process to install a new hard disk.

d.

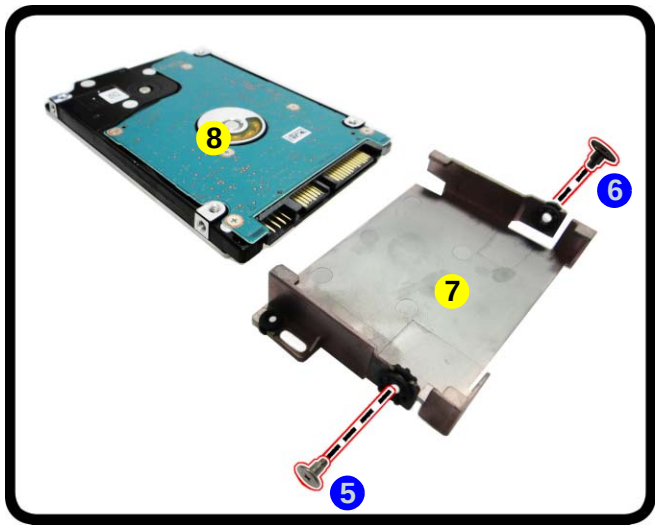

Figure 7
2.5” HDD Removal

d. Remove the screws and separate the bracket from the HDD

7. Bracket

- 2 Screws

Figure 8
SSD Removal

d. Remove the screws and separate the bracket from the HDD
e. Separate the bracket and sponge

Removing the SDD from the Bracket

5. Remove screws 5 & 6 and separate the bracket and sponge assembly 7 from the HDD 8.
6. Separate the bracket 9 from the sponge 10 (***Figure 4e***).
7. **Make sure you insert the sponge when installing a new HDD.**
8. Reverse the process to install a new hard disk.

d.

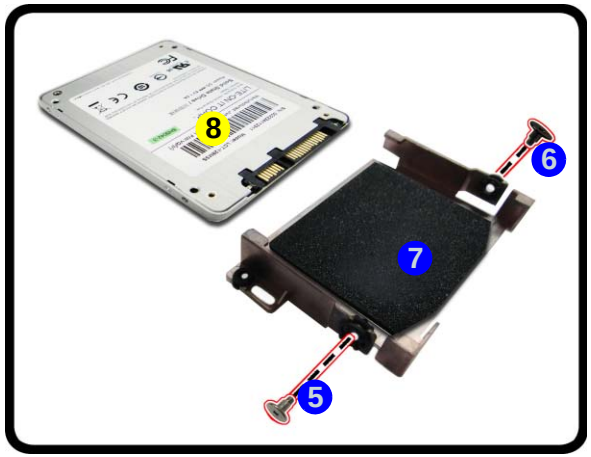

e.

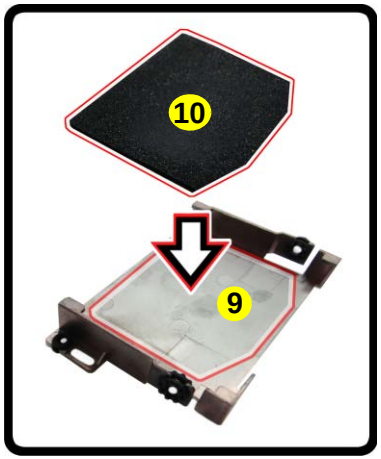

8. Hard Disk
9. Bracket
10. Sponge

- 2 Screws

Removing the Optical (CD/DVD) Device

1. Remove the battery (***page 2 - 5***) and rear top cover (***page 2 - 7***).
2. Remove screw A from the optical device (***Figure 9a***).
3. Push the optical device B out in the direction of arrow C (***Figure 9b***).

a.

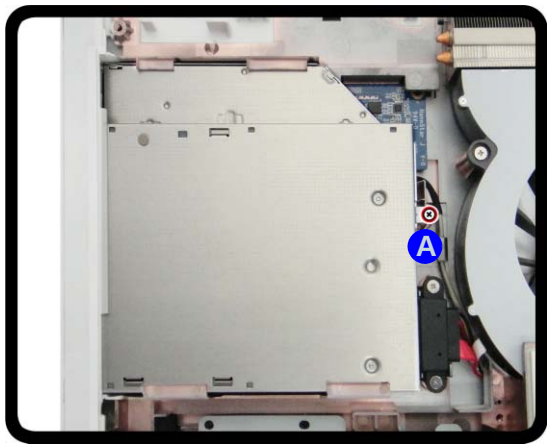

b.

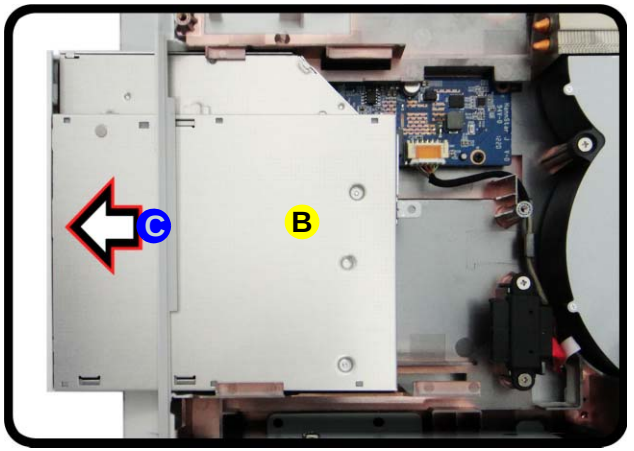

Figure 9
Optical Device Module Removal

a. Remove the screw.
b. Push out the optical device module.

B. Optical Device Module

- 1 Screw

Figure 10
RAM Module Removal

a. Locate the RAM.
b. Pull the latches to release the RAM module.
c. Remove the RAM module.

Single Memory Module Installation

If your computer has a single memory module, then insert the module into the **Channel 0 (JDIMM_1)** socket. In this case this is the upper memory socket (the socket furthest from the mainboard) as shown in ***Figure 10b***.

D. RAM Module

Upgrading the System Memory (RAM)

The computer has **two** memory sockets for 204 pin Small Outline Dual In-line (SO-DIMM) **DDRIII (DDR3)** type memory modules (see *Memory* ***page 1 - 2*** for details of supported module types).

The total memory size is automatically detected by the POST routine once you turn on your computer.

1. Remove the battery (***page 2 - 5***) and rear top cover (***page 2 - 7***).
2. The RAM is located at point A (***Figure 10a***).
3. Gently pull the two release latches on the sides of the memory socket in the direction indicated by the arrows (B & C) in ***Figure 10b***.
4. The RAM module D will pop-up (***Figure 10c***), and you can remove it (see over).

a.

b.

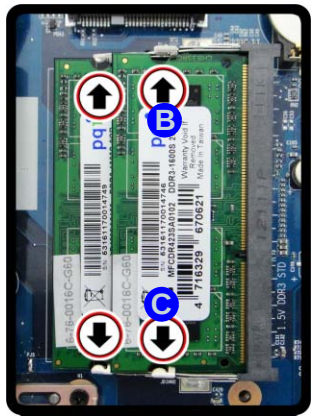

c.

Contact Warning

Be careful not to touch the metal pins on the module's connecting edge. Even the cleanest hands have oils which can attract particles, and degrade the module's performance.

5. Pull the latches to release the second module if necessary.
6. Insert a new module holding it at about a 30° angle and fit the connectors firmly into the memory slot.
7. The module's pin alignment will allow it to only fit one way. Make sure the module is seated as far into the slot as it will go. DO NOT FORCE the module; it should fit without much pressure.
8. Press the module in and down towards the mainboard until the slot levers click into place to secure the module.
9. Replace the module bay cover and screws.
10. Restart the computer to allow the BIOS to register the new memory configuration as it starts up.

Figure 11
Stand Removal

a. Push to release the stand cover.
b. Remove the screws
c. Remove the stand.

Removing the Stand

1. Turn **off** the computer and disconnect all cables and peripherals.
2. Carefully place the computer flat with the LCD facing down (make sure you cover the LCD to avoid scratches) so that you may access the rear cover.
3. Push at point A to release the stand cover in the direction of the arrow B (***Figure 11a***).
4. Lift the stand cover C off the computer and remove screws D - K from the stand (***Figure 11b***).
5. Remove the stand L (***Figure 11b***).

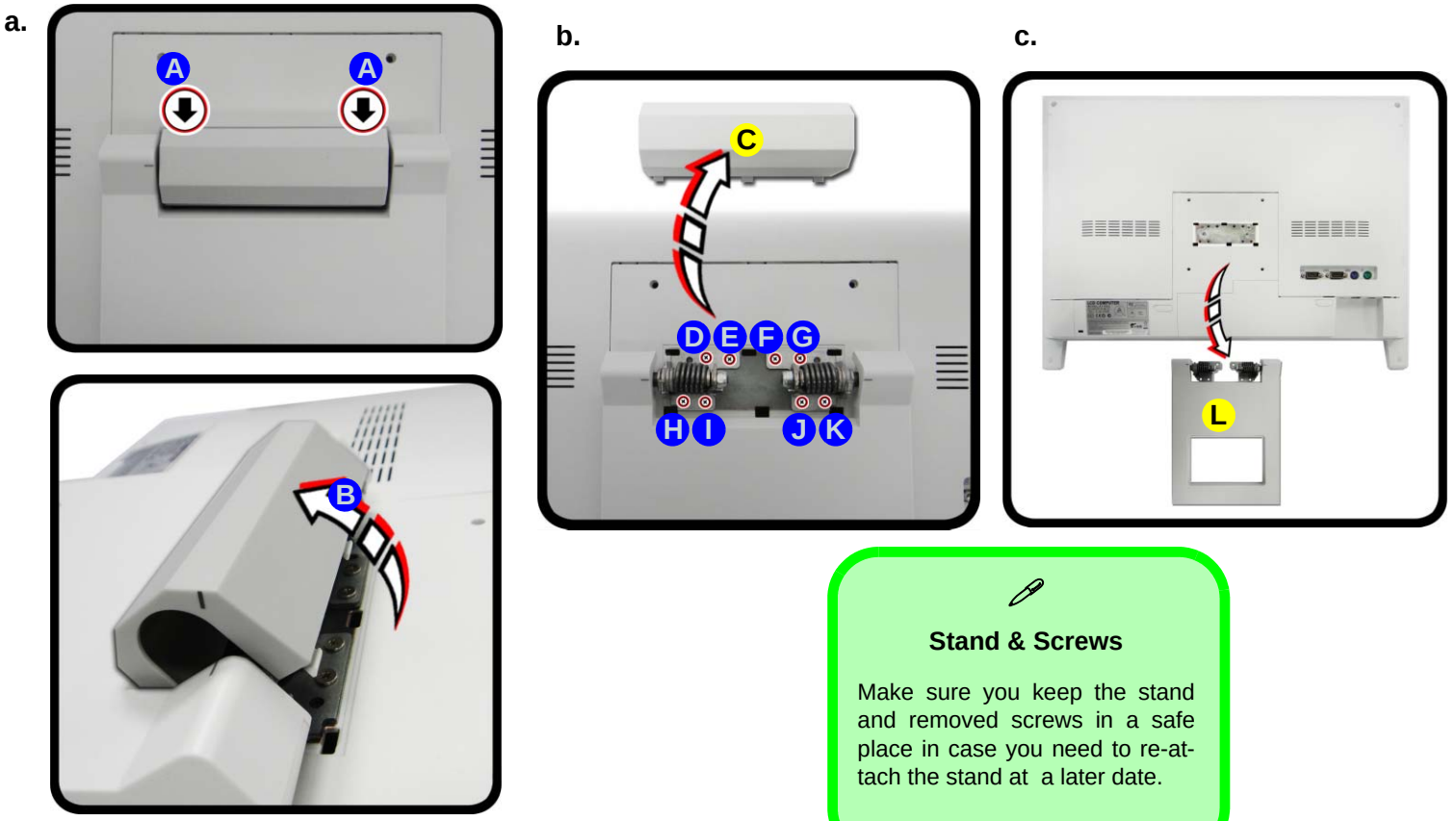

C. Stand Cover
L. Stand

- 8 Screws

Stand & Screws

Make sure you keep the stand and removed screws in a safe place in case you need to re-attach the stand at a later date.

Removing the Wireless LAN Module

1. Remove the rear top cover (*page 2 - 7*).
2. The WLAN module is located at point A (*Figure 12a*).
3. Remove screw B, and disconnect antenna cables C & D (*Figure 12b*).
4. When the screw and cables have been removed/disconnected the WLAN module E will pop up (*Figure 12c*) and can be removed (*Figure 12d*).

a.

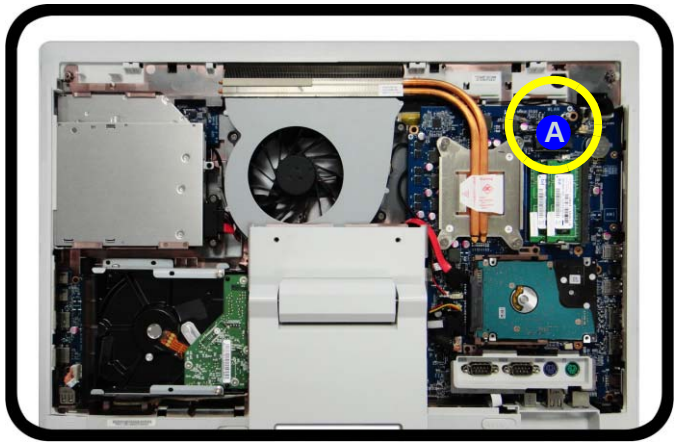

b.

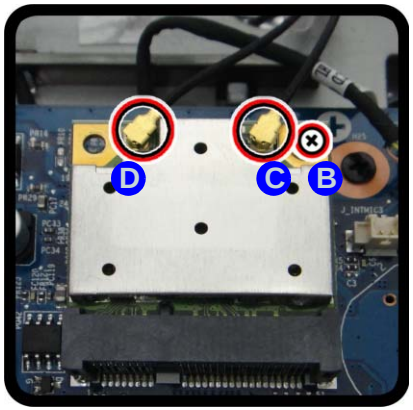

c.

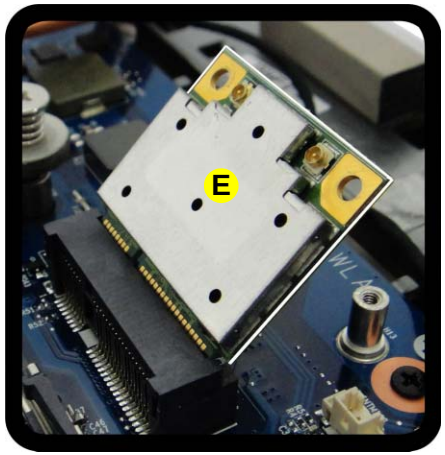

d.

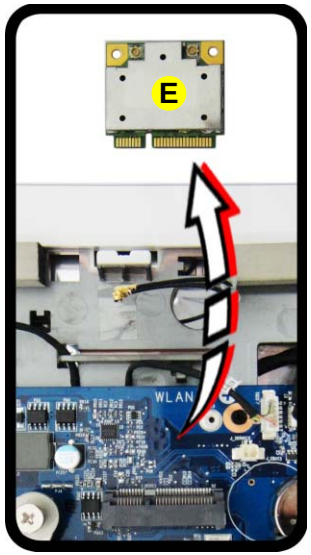

Figure 12
WLAN Module Module Removal

a. Locate the WLAN module.
b. Remove the screw and disconnect the antenna cables.
c. The module will pop up.
d. You can then remove the module.

E. WLAN Module

- 1 Screw

Figure 13
CPU Removal

a. Locate the heat sink.
b. Loosen the screws in the order indicated.
c. Remove the heat sink unit.

Removing the CPU

1. Remove the rear top cover (*page 2 - 7*).
2. The CPU heat sink unit is located at point A (*Figure 13a*).
3. Loosen the heat sink unit screws in the order 4, 3, 2, 1 (*Figure 13b*).
4. You can then remove the heat sink unit B (*Figure 13c*).

a.

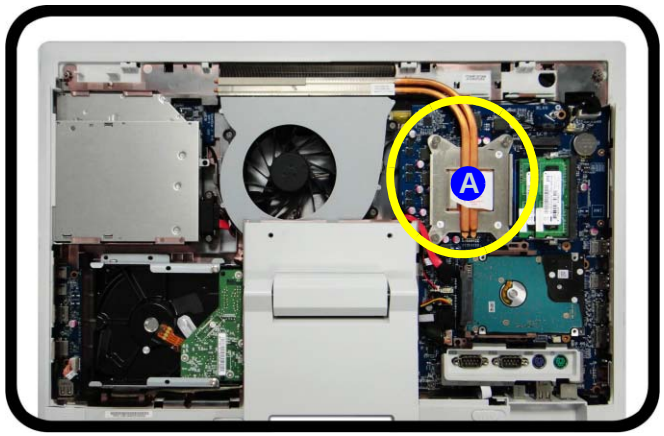

b.

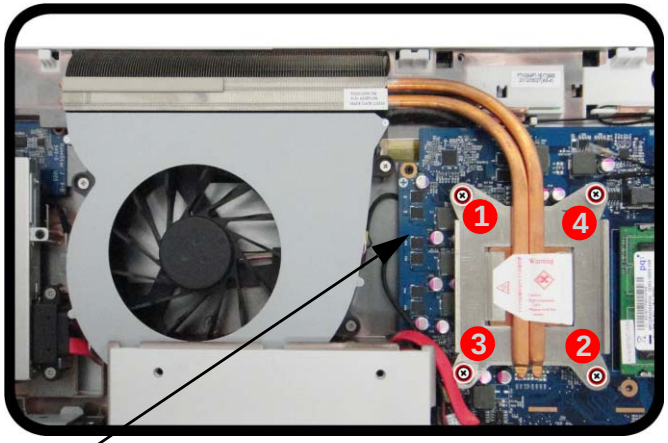

To remove the heat sink unit, loosen the screws in the order 4, 3, 2, 1 (there are numbers on the heat sink unit itself).

c.

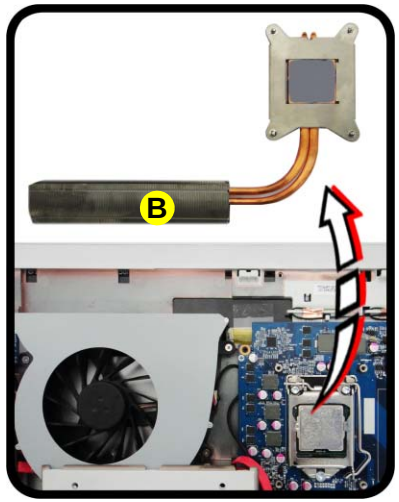

B. Heat Sink Unit

Caution

The heat sink, and CPU area in general, contains parts which are subject to high temperatures. Allow the area time to cool before removing these parts.

5. Press down and hold the latch C (with the latch held down, you will be able to release it) (*Figure 14d*).
6. Move the latch D and bracket E fully in the direction indicated to unlock the CPU.
7. Carefully (it may be hot) lift the CPU F up out of the socket (*Figure 14e*).
8. See *page 2 - 20* for information on inserting a new CPU.
9. When inserting a CPU, pay careful attention to the pin alignment, it will fit only one way (DO NOT FORCE IT!).

Figure 14
CPU Removal (cont'd)

d. Press and hold the latch.
e. Move the latch and bracket fully in the direction to unlock the CPU.
f. Remove the CPU.

d.

e.

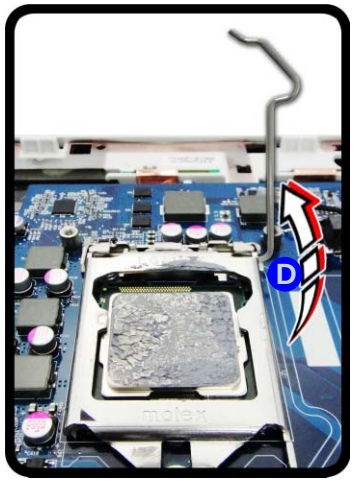

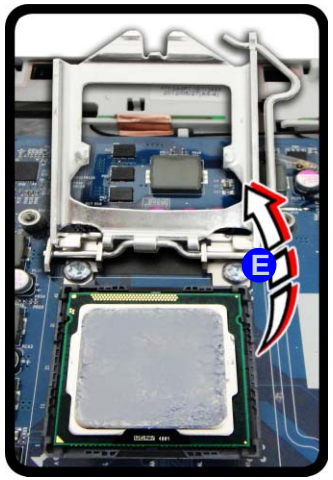

f.

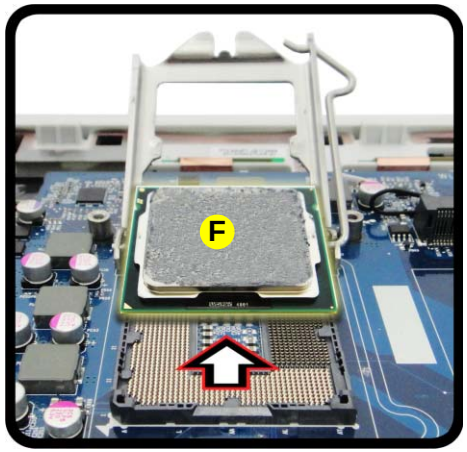

F. CPU

Figure 15
Processor Installation

a. Insert and lock in the CPU.
b. Apply thermal grease to top of the CPU.
c. Insert the heat sink.
d. Tighten the screws in the order indicated.

Processor Installation Procedure

1. Insert the CPU (A), paying careful attention to the pin alignment, it will fit only one way (DO NOT FORCE IT!) (***Figure 15a***).
2. Press the bracket (B) and latch (C) to lock it.
3. Apply the thermal grease (D) to top of the CPU (***Figure 15b***).
4. Insert the heat sink (E) as indicated (***Figure 15c***).
5. Tighten screws in the order (1), (2), (3), (4) (***Figure 15d***).

a.

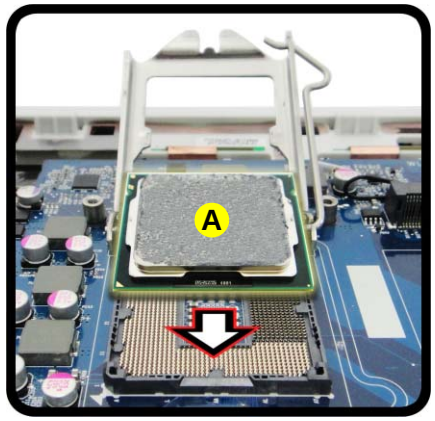

b.

c.

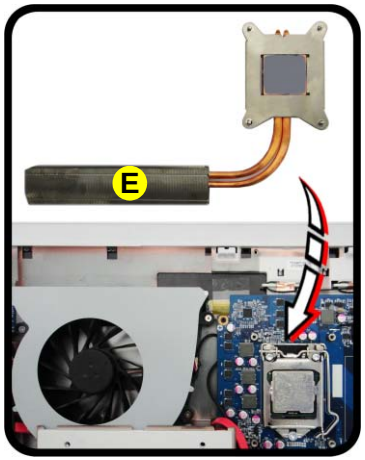

d.

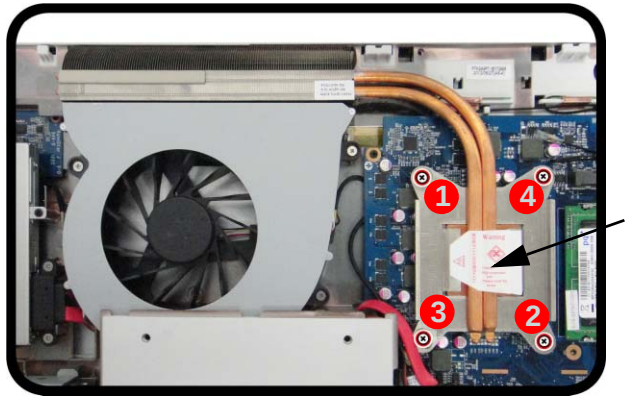

To secure the heat sink unit, tighten the screws in the order (1), (2), (3), (4) (there are numbers on the heat sink unit itself).

A. CPU
E. Heat Sink Unit

Appendix A: Part Lists

This appendix breaks down the ***A110EU*** series LCD computer's construction into a series of illustrations. The component part numbers are indicated in the tables opposite the drawings.

Note: This section indicates the *manufacturer's* part numbers. Your organization may use a different system, so be sure to cross-check any relevant documentation.

Note: Some assemblies may have parts in common (especially screws). However, the part lists DO NOT indicate the total number of duplicated parts used.

Note: Be sure to check any update notices. The parts shown in these illustrations are appropriate for the system at the time of publication. Over the product life, some parts may be improved or re-configured, resulting in *new* part numbers.

Part List Illustration Location

The following table indicates where to find the appropriate part list illustration.

Table A- 1
Part List Illustration Location

Parts	A110EU
Front	*page A - 3*
Front (No CCD)	*page A - 4*
MB	*page A - 5*
Back	*page A - 6*
HDD	*page A - 7*
DVD	*page A - 8*
COMBO	*page A - 9*

Front

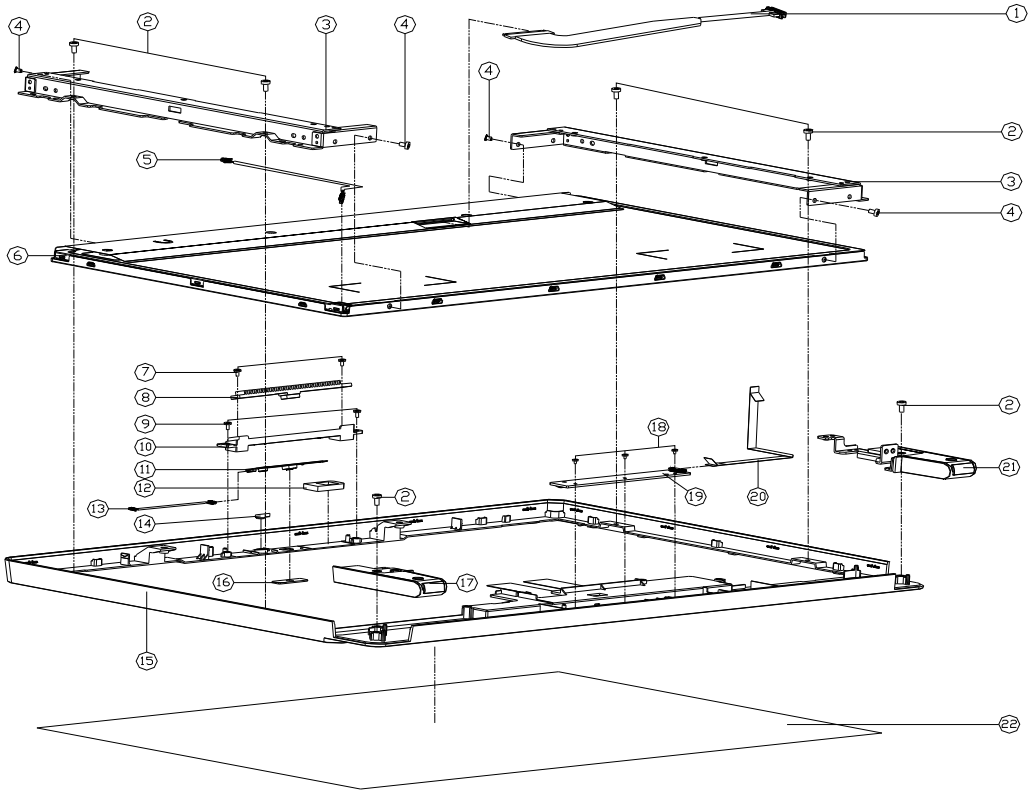

ITEM	PART NAME	PART NO	REMARK
1	WIRE CABLE LCD TO MB 30PIN 0.4L/PS CONN(YP-30F) (WHITE) A110EU 450LD	6-43-A11E1-011-B	
2	SCREW M3*6L KI NI ICT NY	6-35-B1130-6RA	
3	LCD BKT-UPDOWN SECC A110EU	6-33-A11E1-011	FOR 6-50-RB2B5-D00
3	LCD BKT-RL SECC A110EU	6-33-A11E1-021	FOR 6-50-RB2A7-L00
4	SCREW M3*4L KI BZ ICT NY (D=4.8 T=0.5)	6-35-B6130-4RB	
5	WIRE CABEL PANEL TO CONVERTER BOARD 6PIN 0.4L/WH A110EU 450LD	6-43-A11E1-021	FOR 6-50-RB2A7-L00 6-50-A11E1-010
5	WIRE CABEL PANEL TO CONVERTER BOARD 6PIN 0.4L/ (WHITE) A110EU 450LD	6-43-A11E1-032	FOR 6-50-RB2B5-D00
6	LCD 21.5" FHD CHIMEI M215HGE-L21 LED 11.5MM	6-50-RB2B5-D00	FOR 6-33-A11E1-01X 6-43-A11E1-03X
6	LCD 21.5" FHD LG LM215WF4-TLG1 LED 10.7MM	6-50-RB2A7-L00	FOR 6-33-A11E1-02X 6-43-A11E1-02X
7	SCREW M2.5*5L KI BK/Z ICT NY	6-35-B6125-5RA	
8	CCD HEAT SINK MODULE AL (CHANGE) L390T	6-31-L39TN-102	
9	SCREW M2.5*6L K BZ ICT NY	6-35-82125-6RA	
10	CCD SUPPORT HOUSING PC+ABS A110EU	6-42-A11E1-032	
11	INC CHECK HOUSING FOR INDUCTOR 3W 2W FOR SMD(4020) POWER WIRE WOUND POWER	6-88-P37EC-4902	
12	CCD LED SPONGE(255*14*4.15T)SM55 A110EU	6-47-0019A-255	
13	WIRE CABLE CCD+MIC TO MB 6PIN (HL) A110EU	6-43-A11ET-012	
14	MIC RUBBER SILICONE A110EU	6-47-A11E1-031	
15	LCD FRONT COVER MODULE A110EU	6-39-A11E1-012	
16	CCD LENS PMMA A110EU	6-42-A11E1-042	
17	STAND L MODULE A110EU	6-42-A11E1-L01	
18	SCREW M2*3L KI NI ICT NY (OD=ø4.5,DT=0.4)	6-35-B1120-3RE	
19	POWER SWITCH BOARD V4.0 A110EU	6-77-A11ES-D04	
20	FFC CABLE SWITCH BOARD TO MB (PITCH=0.5,15PIN) (CNLD) GOLD A110EU	6-43-A11E0-052	
21	STAND R MODULE A110EU	6-42-A11E1-R01	
22	LCD FRONT COVER PROTECT MYLAR PET A110EU	6-40-A11E8-012	

Figure A - 1
Front

Front (No CCD)

Figure A - 2
Front (No CCD)

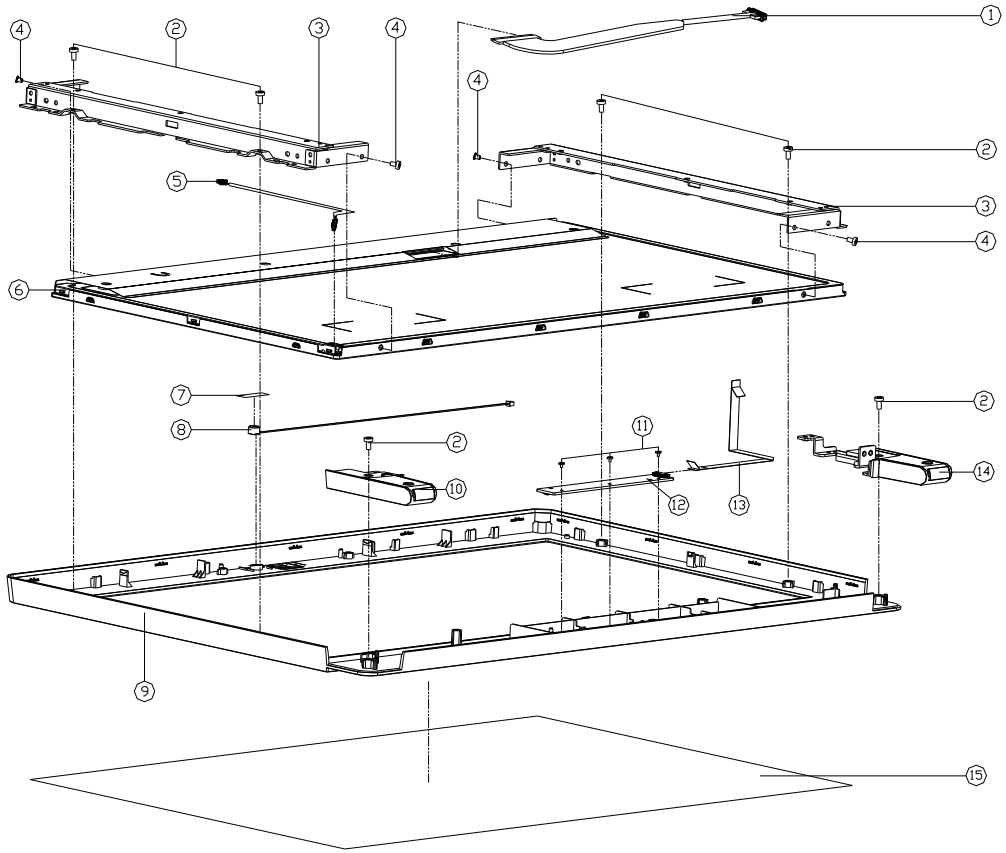

ITEM	PART NAME	PART NO	REMARK
1	WIRE CABLE LCD TO MB 30PIN 0H/PS CONVERTER 30FT WHITE) A110EU (GOLD)	6-43-A11E1-011-B	
2	SCREW M3*6L K1 NI ICT NY	6-35-B1130-6RA	
3	LCD BKT-RL SECC A110EU	6-33-A11E1-021	FOR LG
3	LCD BKT-UPDOWN SECC A110EU	6-33-A11E1-011	FOR CHIMEI
4	SCREW M3*3L T16 P NI ICT NY	6-35-01130-3RA	
5	WIRE CABLE PANEL TO CONVERTER BOARD 6PIN 0H/JST) A110EU (GOLD)	6-43-A11E1-021	FOR LG
5	WIRE CABLE PANEL TO CONVERTER BOARD 6PIN 0H/ ENTERY) A110EU (GOLD)	6-43-A11E1-032	FOR CHIMEI
6	LCD 21.5" FHD LG LM215WF4-TLG1 LED 10.7MM	6-50-RB2A7-L00	FOR LG
6	LCD 21.5" FHD CHIMEI M215HGE-L21 LED 11.5MM	6-50-RB2B5-D00	FOR CHIMEI
7	TAPE MYLAR (C),MYLAR M550J	6-40-M55J2-030	
8	MIC 6.7MM*3.3 10V-2V 22K W/CABLE L=350MM A110EU	6-23-EA11E-011	
9	LCD FRONT COVER MODULE A110EU	6-39-A11E1-012	
10	STAND L MODULE A110EU	6-42-A11E1-L01	
11	SCREW M2*3L K1 NI ICT NY (DD=Ø4.5,DT=0.4)	6-35-B1120-3RE	
12	POWER SWITCH BOARD V3.0 A110EU	6-77-A11ES-D04	
13	FFC CABLE SWITCH BOARD TO MB (PITCH=1.5,5PIN) (CN,US) GOLD A110EU	6-43-A11E0-052	
14	STAND R MODULE A110EU	6-42-A11E1-R01	
15	LCD FRONT COVER PROTECT MYLAR PET A110EU	6-40-A11E8-012	

MB

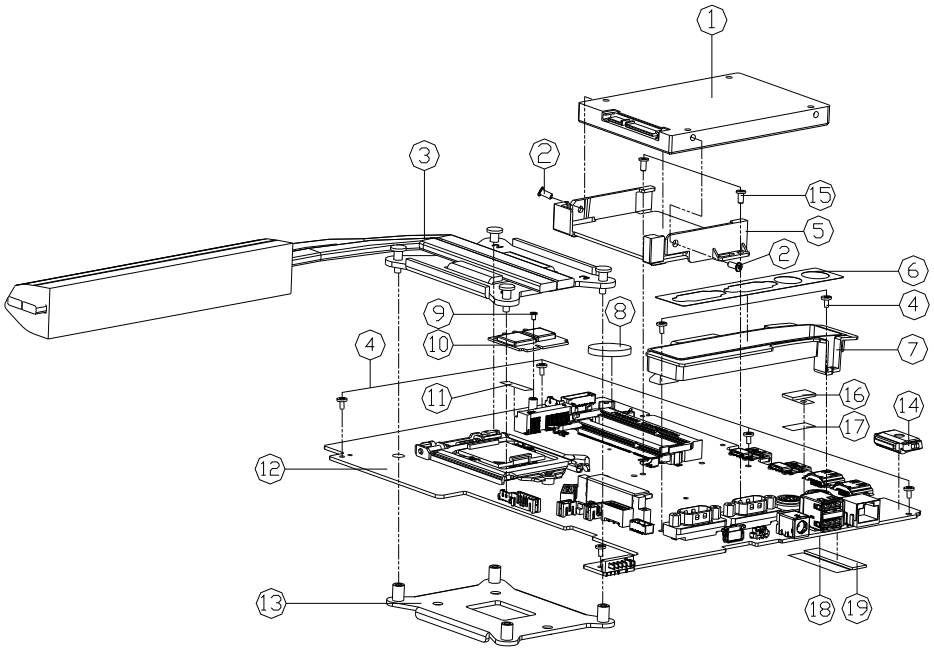

ITEM	PART NAME	PART NO	REMARK
1	W/2.5" HDD ASS'Y A110EU	6-79-A110EU0J-010	(OPTION)
1	W/O 2.5" HDD ASS'Y A110EU	6-79-A110EU0J-030	(OPTION)
2	SHOULDER SCREW M3*8L BNI ICT NY	6-35-Z9130-8R0	
3	CPU HEATSINK MODULE A110EU	6-31-A11EN-102	
4	SCREW M2.5*6L K BZ ICT NY	6-35-82125-6RA	
5	2ND HDD SUPPORT HOUSING MODULE A110EU	6-42-A11EJ-101	
6	RS232 MYLAR FOR CLEVO PC A110EU	6-40-A11ES-011	
7	RS232 COVER MODULE A110EU	6-42-A11ES-102	
8	BAT. 20MM 3V 220MAH CR2032XP (MAXELL)	6-23-22015-TA0	
9	SCREW M2*3L KI NI ICT NY (DD=Φ4.5,DT=0.4)	6-35-B1120-3RE	
10	[illegible]	6-88-W345F-7000	(OPTION)
10	[illegible]	6-88-W345F-9400	(OPTION)
10	[illegible]	6-88-W25H2-9400	(OPTION)
10	[illegible]	6-88-P17EF-4200	(OPTION)
11	TAPE MYLAR TRANSPARENT (20*10*0.05) P180HM	6-40-P1803-020	
12	MAIN BOARD V4.0 A110EU	6-77-A11E0-D04-1	
13	CPU SUPPORT BKT SPCC A110EU	6-33-A11ES-012	
14	E-SATA DUMMY RUBBER FOR EPSON KE5612GU A110EU	6-47-A11E8-012-E	
15	SHOULDER SCREW M2.5*7.8L NI ICT NY	6-35-Z1125-7R8	
16	TAIL GASKET FOR 2ND HDD A110EU	6-47-A11EJ-050	
17	MYLAR(10*10*0.15MM) BLACK M860TUE	6-40-M860S-0C0	
18	HDMI MYLAR DFR117 (36*8*0.25T) A110EU	6-40-A11ES-020	
19	GASKET (36*6*6H) FOR HDMI A110EU	6-47-00190-361	

Figure A - 3
MB

Back

Figure A - 4
Back

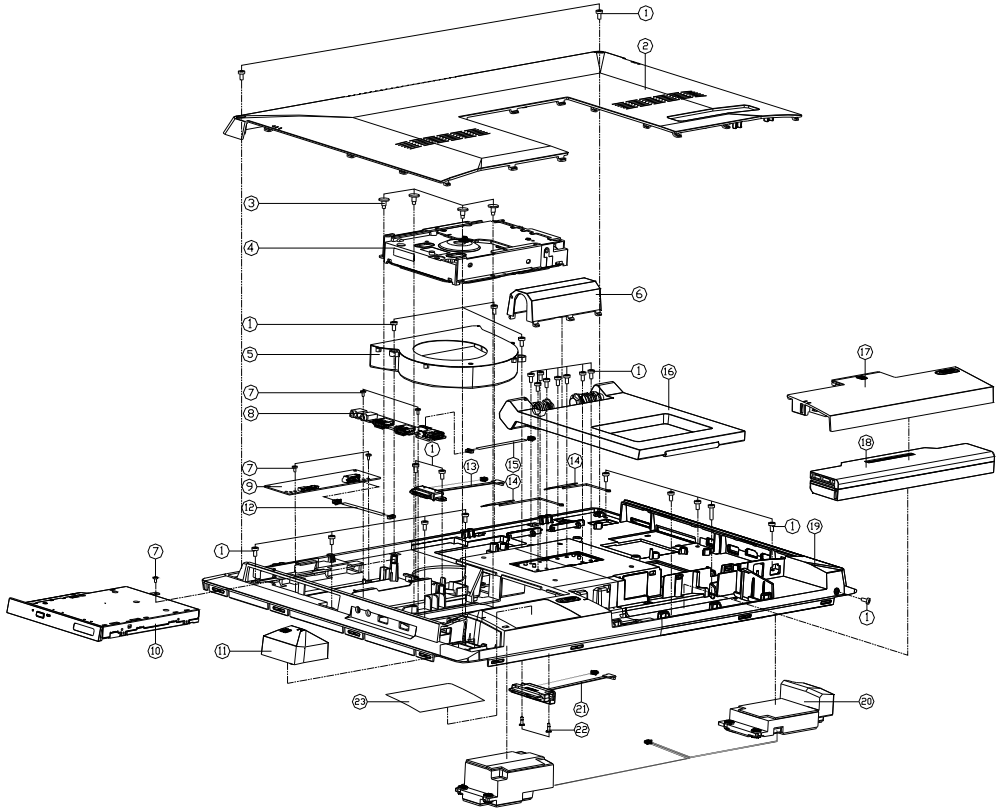

ITEM	PART NAME	PART NO	REMARK
1	SCREW M3*6L K1 NI ICT NY	6-35-B1130-6RA	
2	CPU COVER MODULE A110EU	6-42-A11E8-102	FOR A110EU/-T
2	CPU COVER MODULE (EPSIN LOGO) A110EU-E (KAPOK)	6-42-A11E8-101-E	FOR A110EU-E
3	SHOULDER SCREW M3*8L BNI ICT NY	6-35-Z9130-8R0	
4	W/3.5" HDD ASS'Y A110EU	6-79-A110EU0J-020	(OPTION)
4	W/O 3.5" HDD ASS'Y A110EU	6-79-A110EU0J-040	(OPTION)
5	FAN MODULE A110EU	6-31-A11ES-101	
6	HINGE COVER PC+ABS A110EU	6-42-A11E8-022	
7	SCREW M2.5*6L K BZ ICT NY	6-35-82125-6RA	
8	PHONE JACK & USB BOARD V4.0 A110EU	6-77-A11EA-D04	
9	CONVERTER BOARD V4.0 A110EU	6-77-A11EV-D04	
10	SATA DVD SUPER MULTI ASS'Y (OPTION)	6-79-A110EU0Q-000	
10	SATA BLU-RAY COMBO ASS'Y (OPTION)	6-79-A110EU0W-010	
10	W/O ODD ASS'Y A110EU	6-79-A110EU0Z-000	
11	RF DONGLE PC+ABS A110EU	6-42-A11ER-012	
12	WIRE CABLE CONVERTER BOARD TO MB 6PIN (HL) A110EU	6-43-A11E0-031	
13	WIRE CABLE ODD TO MB (VSD) A110EU WITH GOLDEN	6-43-A11EZ-012	
14	ANTENNA WIRE WGI WF+I PCB 2.4G/35GHZ/5% WI + 150M A110EU	6-23-7A11E-010	
15	WIRE CABLE AUDIO BOARD TO MB 20PIN (HL) A110EU	6-43-A11E0-022	
16	HINGE STAND MODULE A110EU	6-33-A11E3-103	
17	BATTERY COVER MODULE A110EU	6-42-A11EM-102	
18	BLUETOOTH/CAMERA PCB 32P SPONGE/DBL SIDEWAY (EDGE) WIRE	6-87-W130S-4D71	
19	LCD BACK COVER MODULE A110EU	6-39-A11E1-022	
20	SPK-CABLE W/GOLDEN-PLUG 30W 4P P20K(G)4-4 A110EU(GLUE)	6-23-5A11E-0S2	
21	WIRE CABLE HDD TO MB (VSD) A110EU	6-43-A11EJ-011	
22	SHOULDER SCREW M2*7.5L NI ICT NY	6-35-Z1120-7R5	
23	PRODUCT LABEL FOR A110EU	6-45-A110EU03-010	FOR A110EU
23	PRODUCT LABEL A110EU-E FOR EPSIN	6-45-A110EUE3-010	FOR A110EU-E
23	PRODUCT LABEL FOR A110EU-T	6-45-A110EUT3-010	FOR A110EU-T

HDD

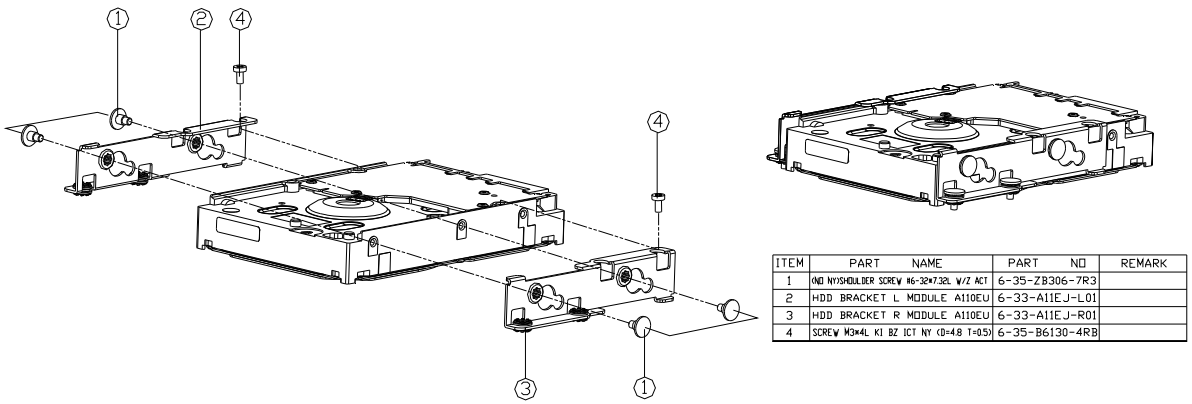

ITEM	PART NAME	PART NO	REMARK
1	(NI) NYSHOULDER SCREW #6-32*7.32L W/Z ACT	6-35-ZB306-7R3	
2	HDD BRACKET L MODULE A110EU	6-33-A11EJ-L01	
3	HDD BRACKET R MODULE A110EU	6-33-A11EJ-R01	
4	SCREW M3*4L KI BZ ICT NY (D=4.8 T=0.5)	6-35-B6130-4RB	

Figure A - 5
HDD

DVD

Figure A - 6
DVD

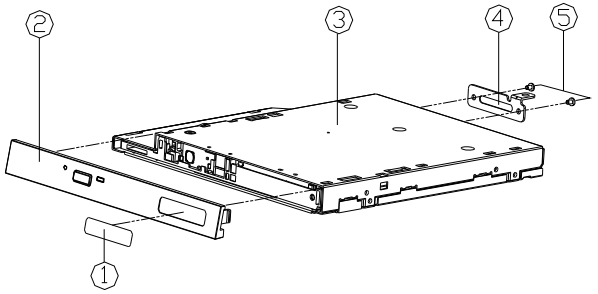

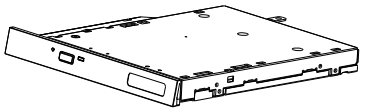

ITEM	PART NAME	PART NO	REMARK
1	SUPER MULTI ODD BEZEL LABEL(WHITE) A110EU	6-45-A110EU0Q-010	
2	ODD BEZEL MODULE A110EU	6-42-A11EZ-102	
3	[illegible]	6-85-A078X-P13	
3	[illegible]	6-85-A078X-T13	
4	CD-ROM LOCK BRACKET,SECC(#1) M55GG	6-33-M55GZ-013	
5	SCREW M2*3L KI NI ICT NY (OD=4.5,DT=0.4)	6-35-B1120-3RE	

Combo

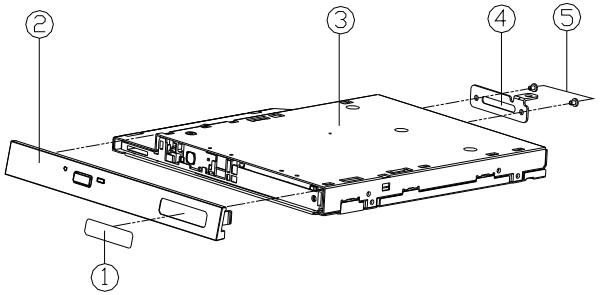

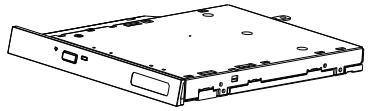

ITEM	PART NAME	PART NO	REMARK
1	BLU-RAY ODD BEZEL LABEL (WHITE) A110EU	6-45-A110EU0W-010	
2	ODD BEZEL MODULE A110EU	6-42-A11EZ-102	
3	[illegible]	6-85-B076X-1P0	
4	CD-ROM LOCK BRACKET,SECC(NID M550G	6-33-M55GZ-013	
5	SCREW M2*3L KI NI ICT NY (OD=Ø4.5,DT=0.4)	6-35-B1120-3RE	

Figure A - 7
Combo

Appendix B: Schematic Diagrams

This appendix has circuit diagrams of the ***A110EU*** series LCD computer's PCBs. The following table indicates where to find the appropriate schematic diagram.

Diagram - Page	Diagram - Page	Diagram - Page
System Block Diagram - Page B - 2	*PCH Power - Page B - 18*	*WLAN/TPM1.2/CCD/TP - Page B - 34*
Processor 1/7 - Page B - 3	*PCH Power - Page B - 19*	*5VS, 3VS, 1.5VS_CPU, 12V - Page B - 35*
Processor 2/7 - Page B - 4	*PCH GND - Page B - 20*	*3.3V_M, 1.05V_M, 1.05VS_VTT - Page B - 36*
Processor 3/7 - Page B - 5	*LVDS, Inverter - Page B - 21*	*COM Port / PS2 - Page B - 37*
Processor 4/7 - Page B - 6	*SCALAR - Page B - 22*	*VDD3, VDD5 - Page B - 38*
Processor 5/7 - Page B - 7	*SCALAR-1 - Page B - 23*	*Power 0.925V/1.8VS - Page B - 39*
Processor 6/7 - Page B - 8	*HDMI IN, USB2.0*2 - Page B - 24*	*Power 1.5V/1.05VS - Page B - 40*
Processor 7/7 - Page B - 9	*HDMI OUT - Page B - 25*	*Power VCORE1 - Page B - 41*
DDR3 SO-DIMM_0 - Page B - 10	*KBC-ITE IT8518 - Page B - 26*	*Power VCORE2 - Page B - 42*
DDR3 SO-DIMM_1 - Page B - 11	*Audio Codec ALC269 - Page B - 27*	*AC-In, Charger - Page B - 43*
PCH PCI - Page B - 12	*AMP2607 & Audio Switch - Page B - 28*	*Audio/USB Board - Page B - 44*
PCH USB/PCIE/DMI - Page B - 13	*Card Reader / RTS5229 - Page B - 29*	*Power SW LED CIR Board - Page B - 45*
PCH SATA - Page B - 14	*LAN (Intel LAN82579) - Page B - 30*	*Power Sequence - Page B - 46*
PCH GPIO/HDA - Page B - 15	*LAN CON/New Card - Page B - 31*	
PCH NVRAM/HDMI - Page B - 16	*HDD/ODD/ESATA - Page B - 32*	
PCH FDI/USB3/Clock - Page B - 17	*USB3.0 - Page B - 33*	

Table B - 1
Schematic Diagrams

Version Note

The schematic diagrams in this chapter are based upon version 6-7P-A11E3-003. If your mainboard (or other boards) are a later version, please check with the Service Center for updated diagrams (if required).

System Block Diagram

Sheet 1 of 45
System Block Diagram

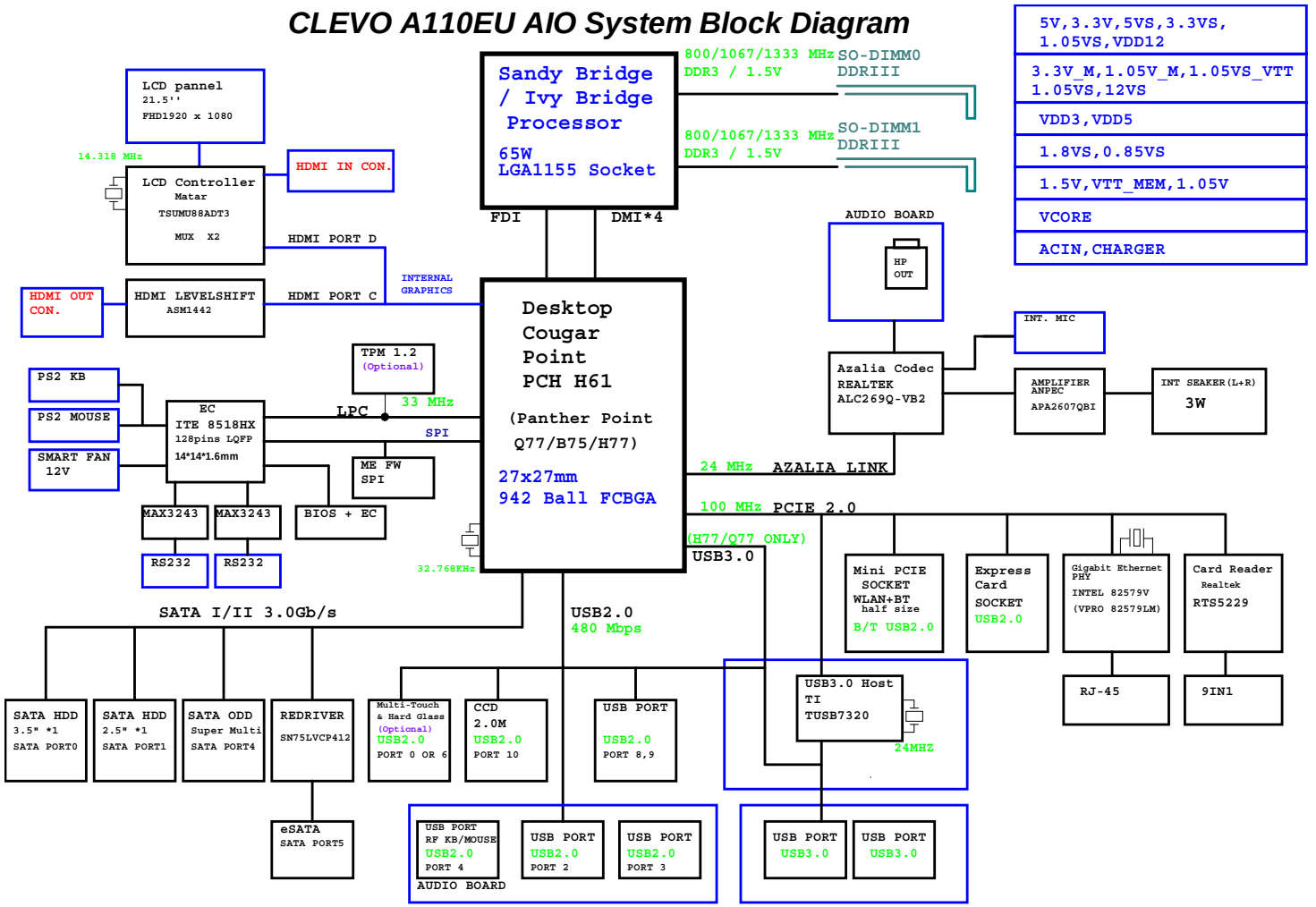

Processor 1/7

DMI,FDI

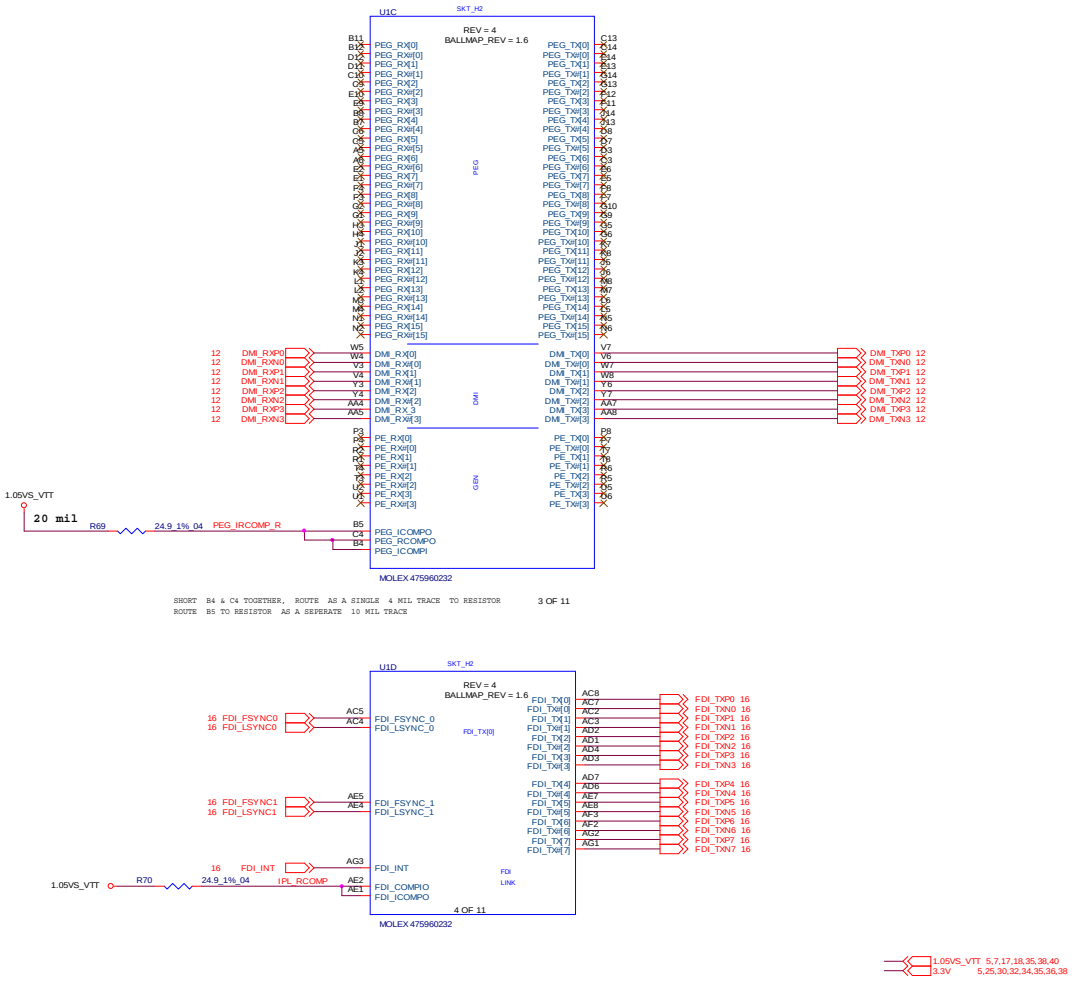

Processor 2/7

Sheet 3 of 45
Processor 2/7

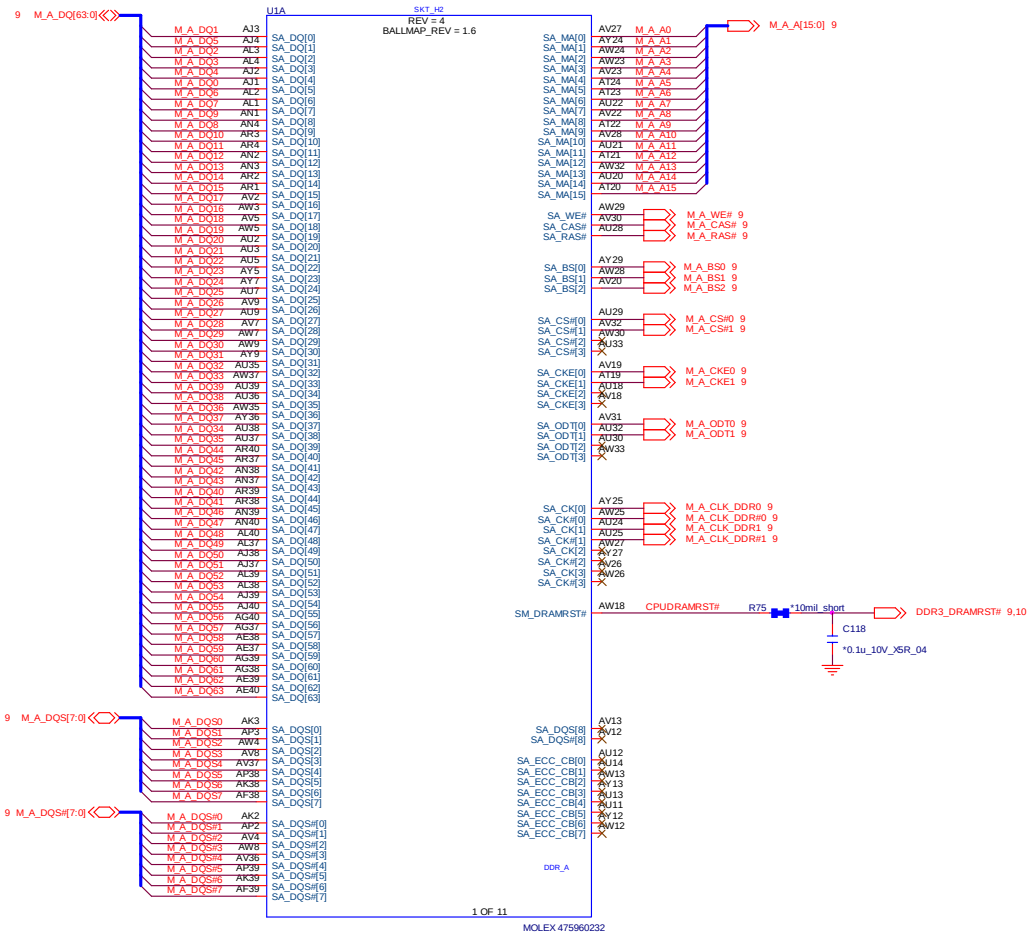

Processor 3/7

DDR B CHANNEL

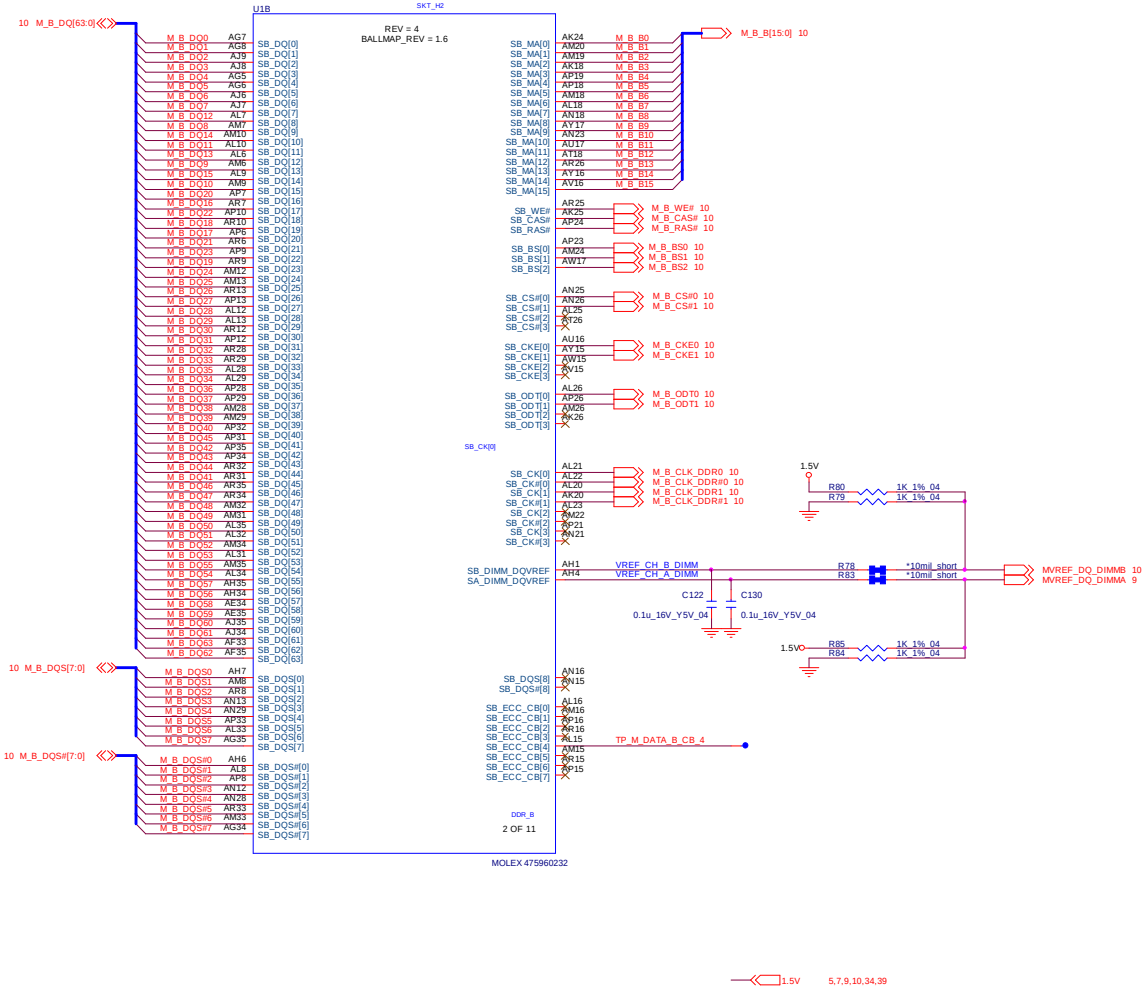

Sheet 4 of 45
Processor 3/7

Processor 4/7

Sheet 5 of 45
Processor 4/7

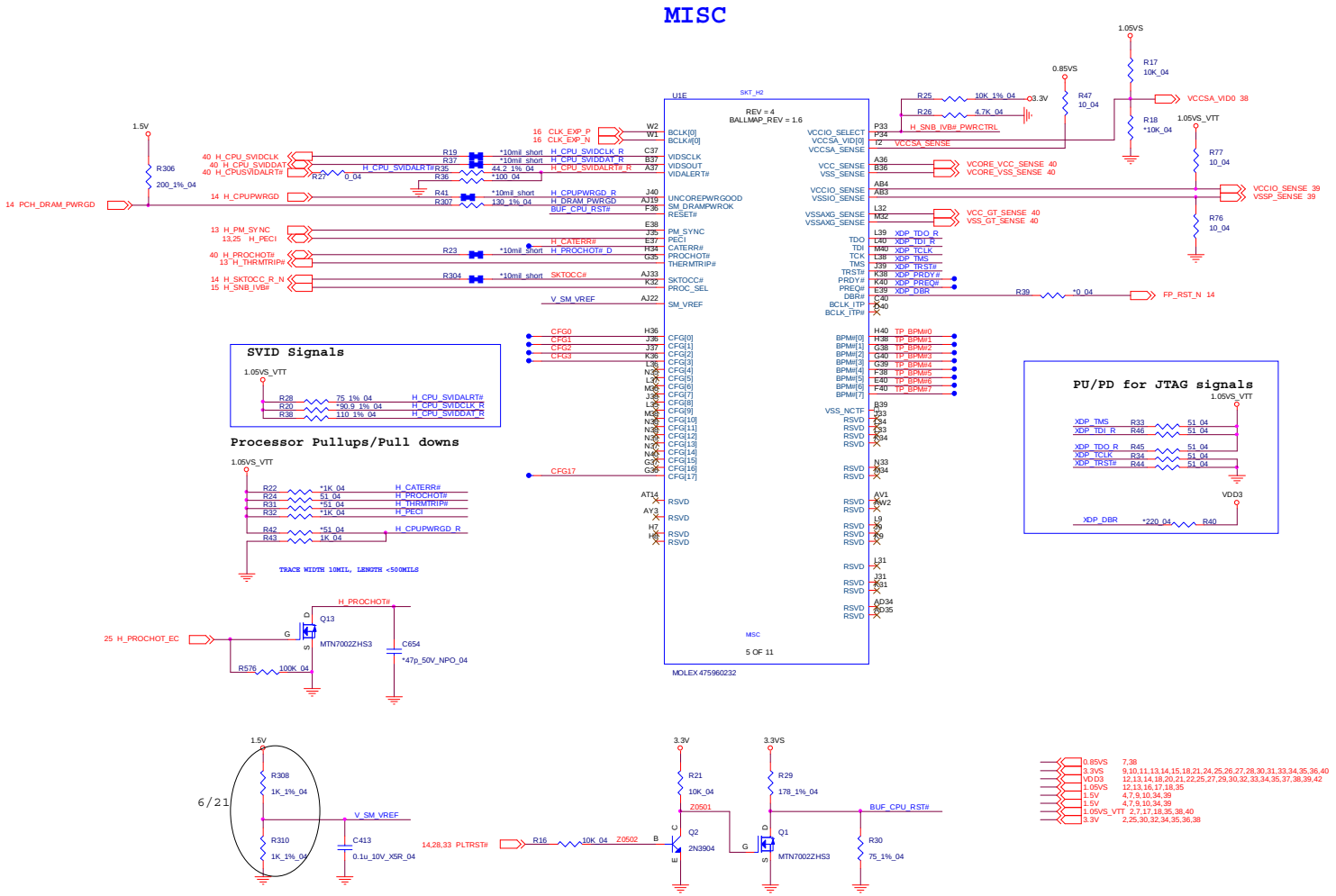

Processor 5/7

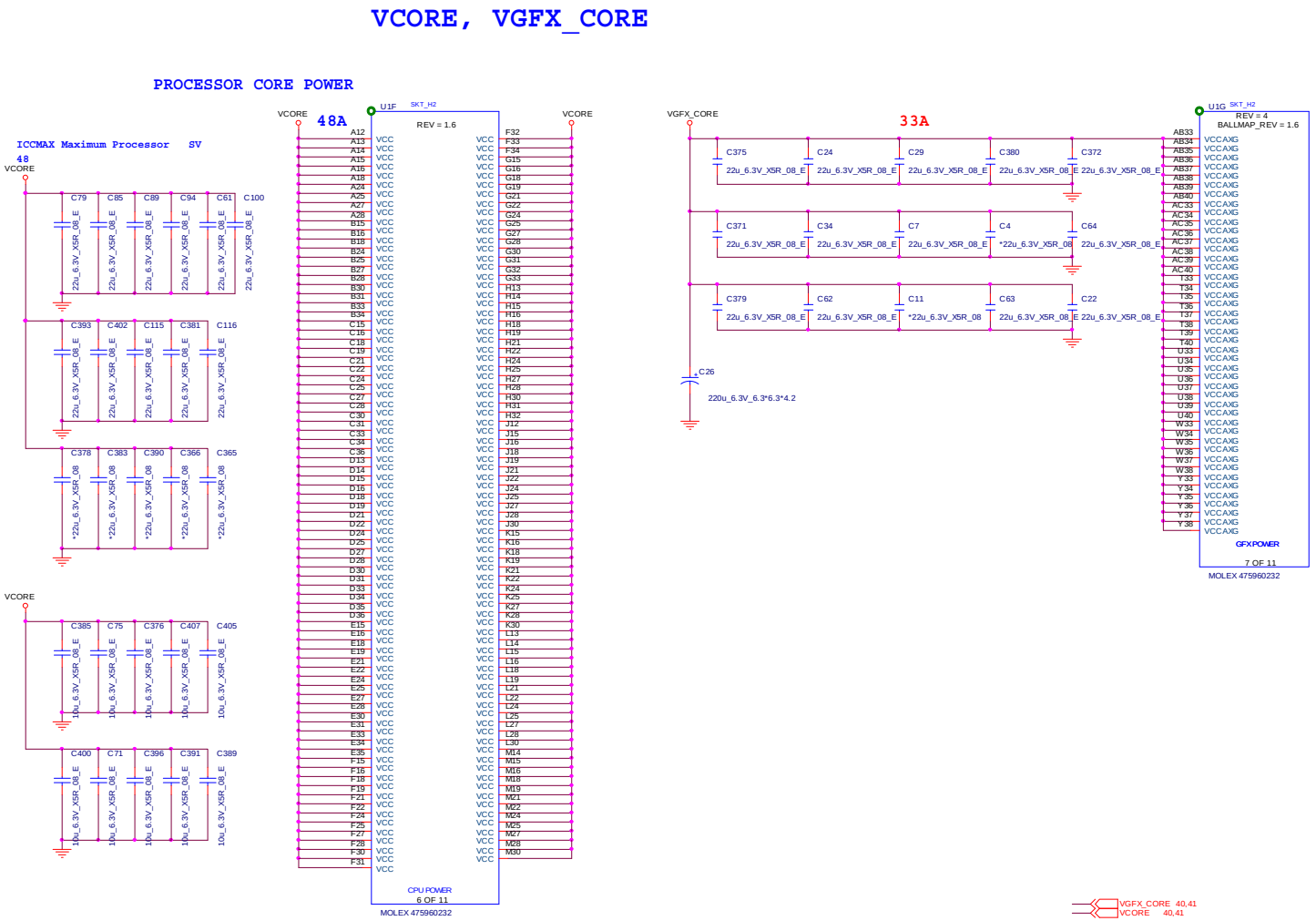

Sheet 6 of 45
Processor 5/7

Processor 6/7

Sheet 7 of 45
Processor 6/7

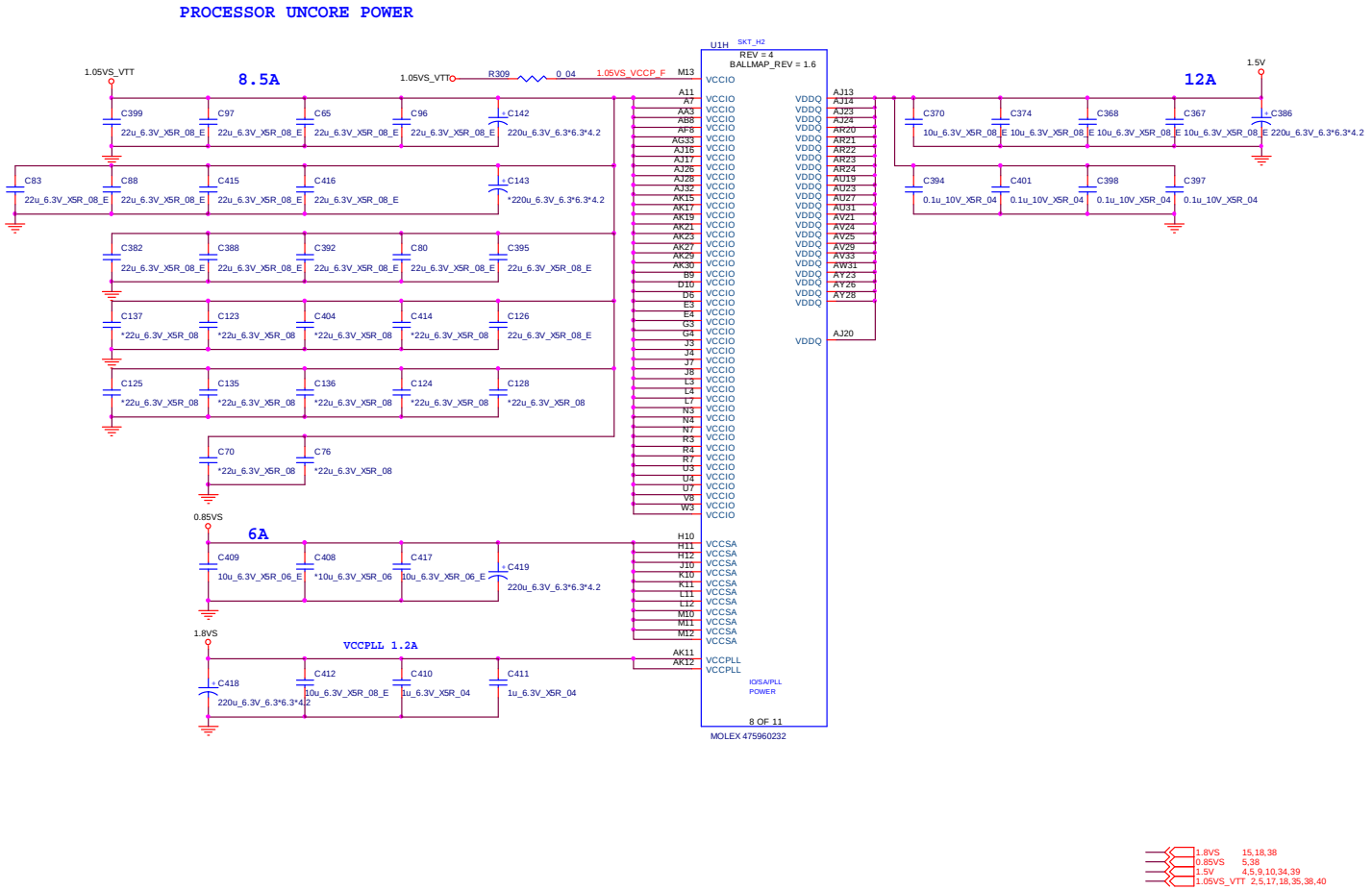

Processor 7/7

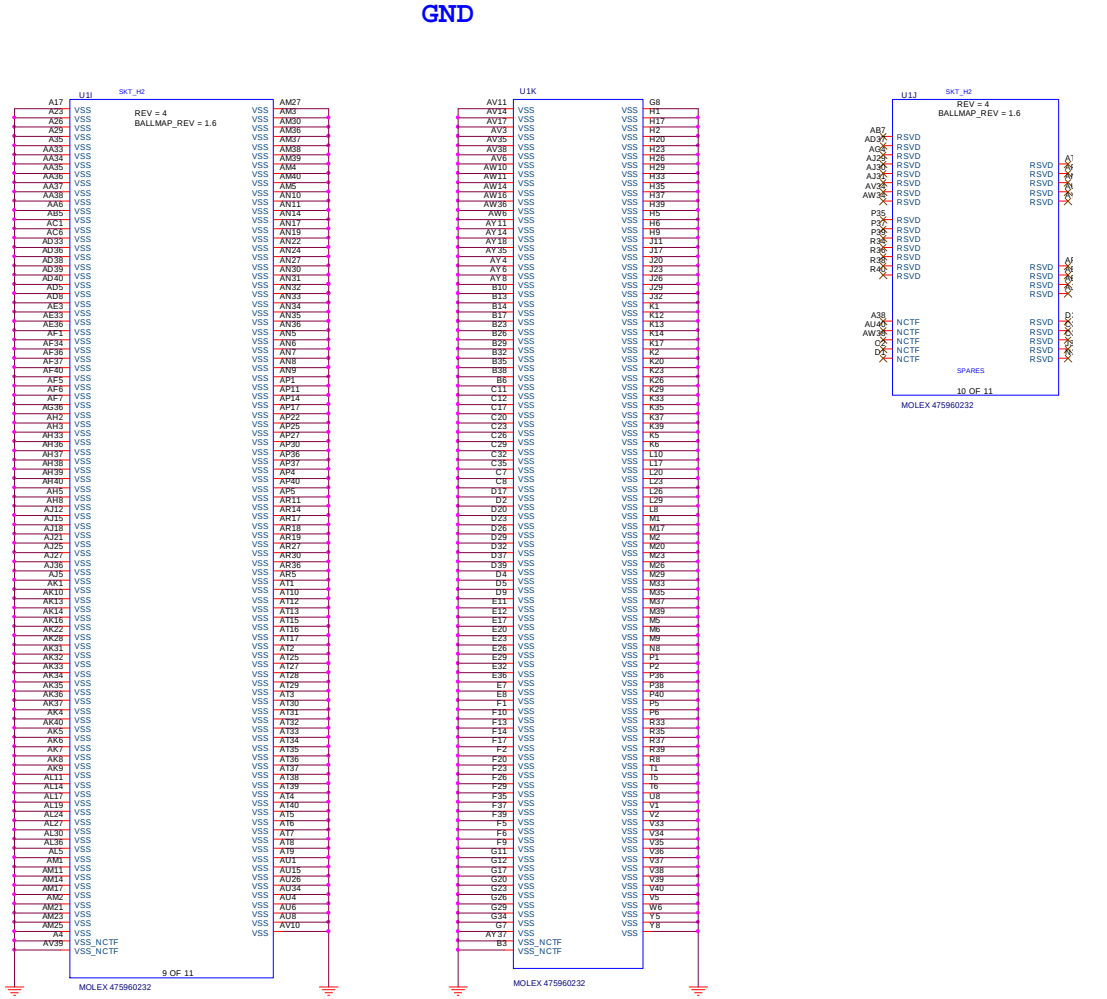

Sheet 8 of 45
Processor 7/7

DDR3 SO-DIMM_0

Sheet 9 of 45
DDR3 SO-DIMM_0

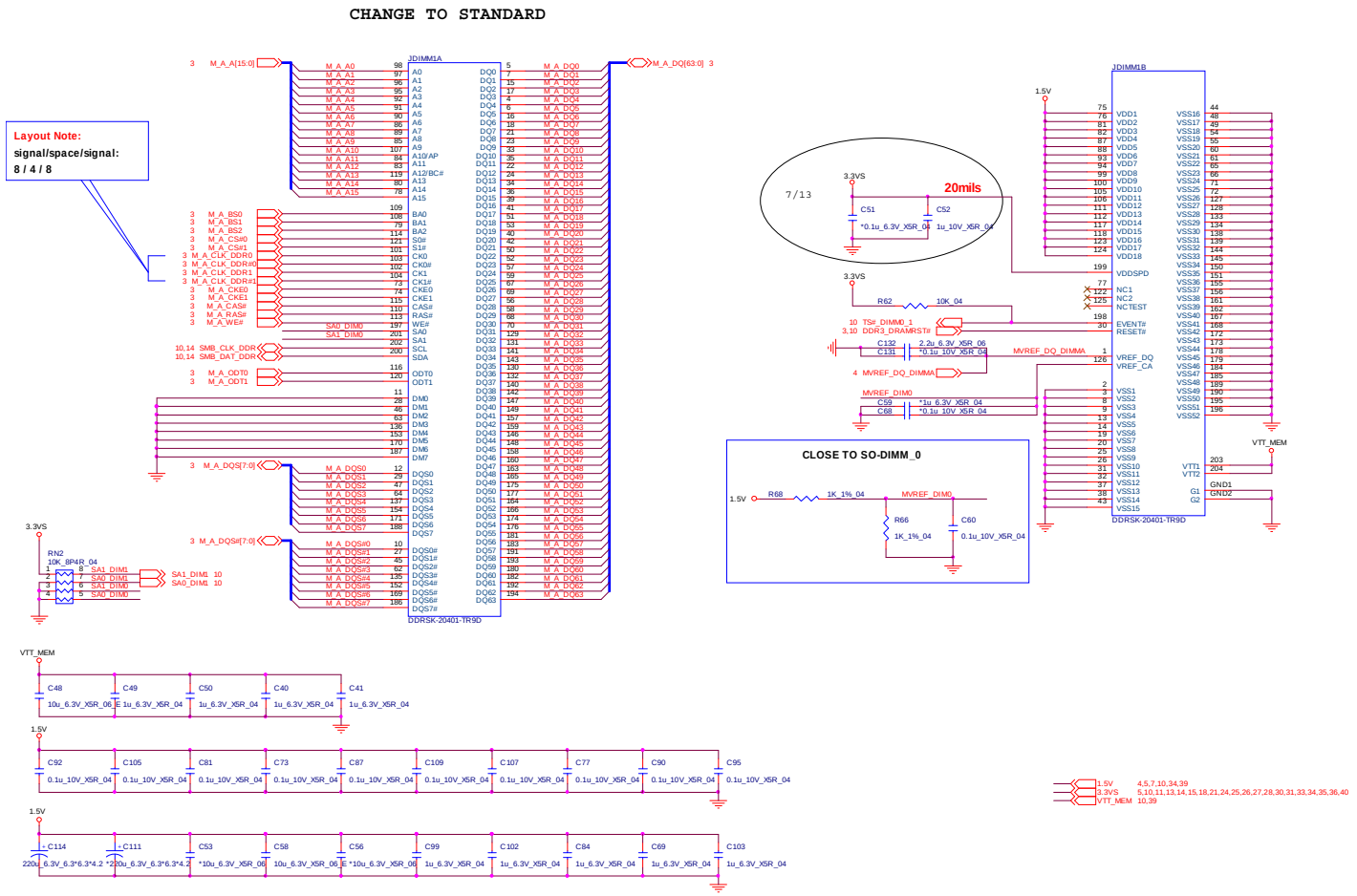

DDR3 SO-DIMM_1

SO-DIMM B

CHANGE TO STANDARD

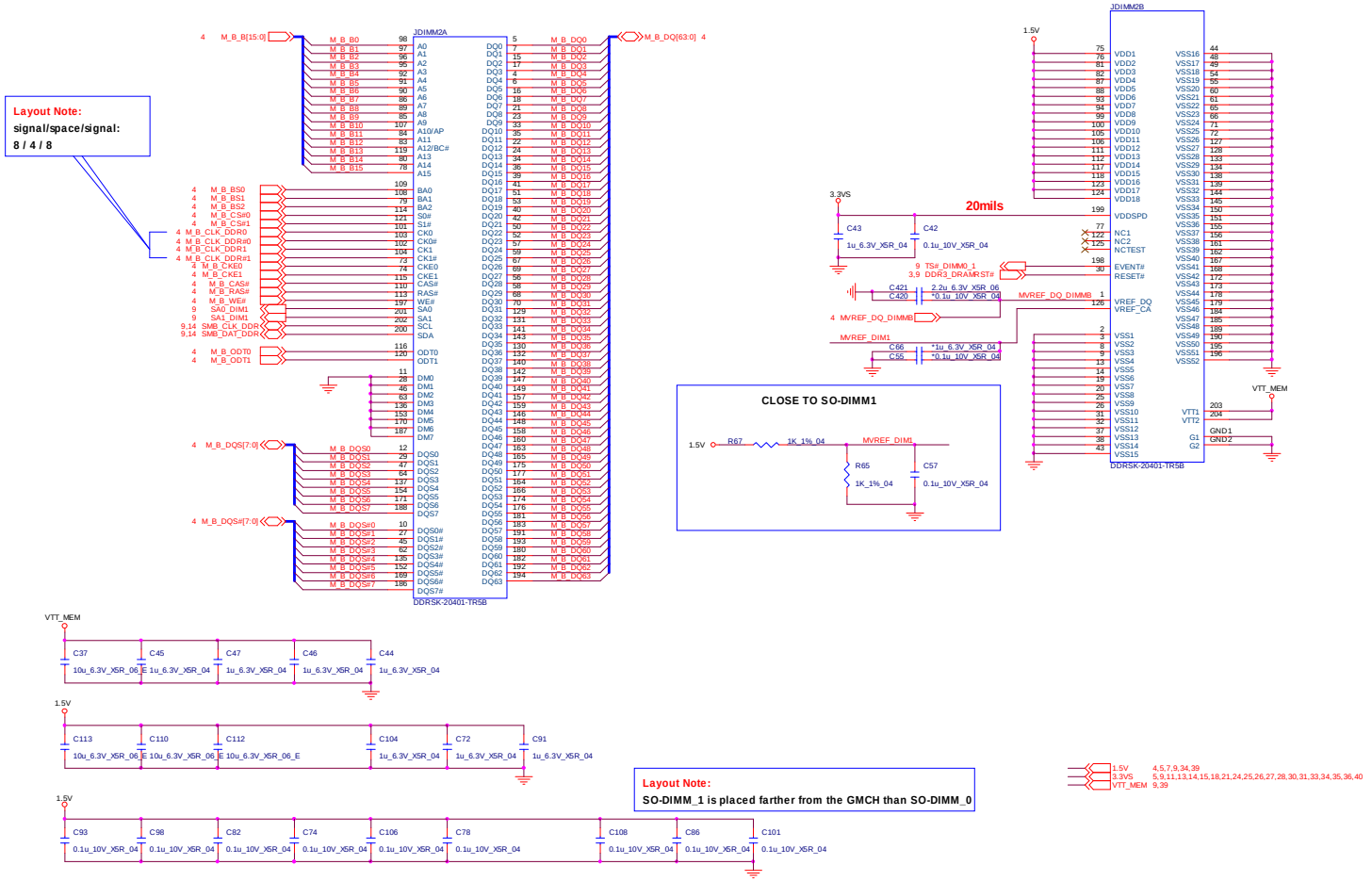

Sheet 10 of 45
DDR3 SO-DIMM_1

PCH PCI

Sheet 11 of 45
PCH PCI

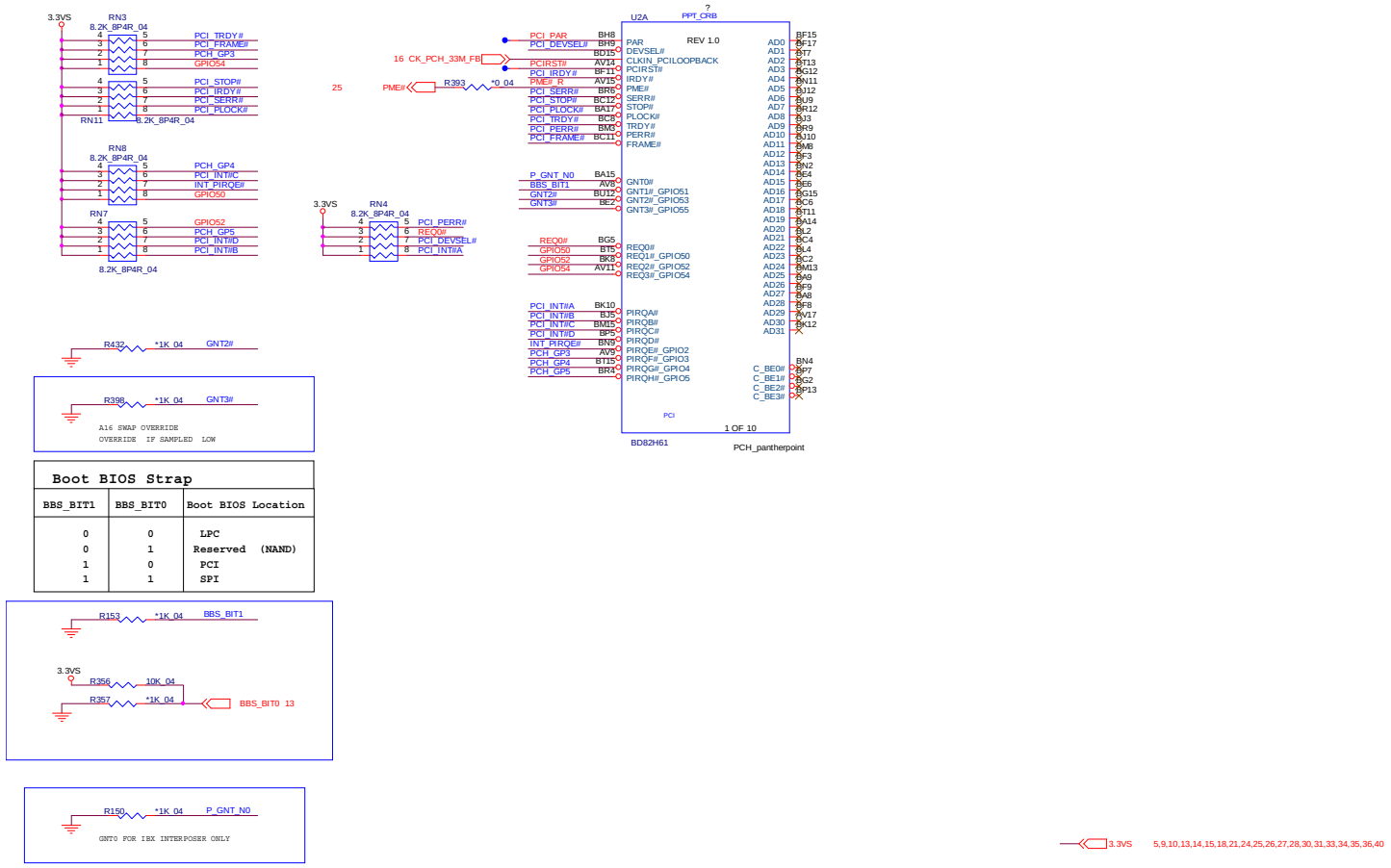

PCH USB/PCIE/DMI

DMI , PCIE , USB

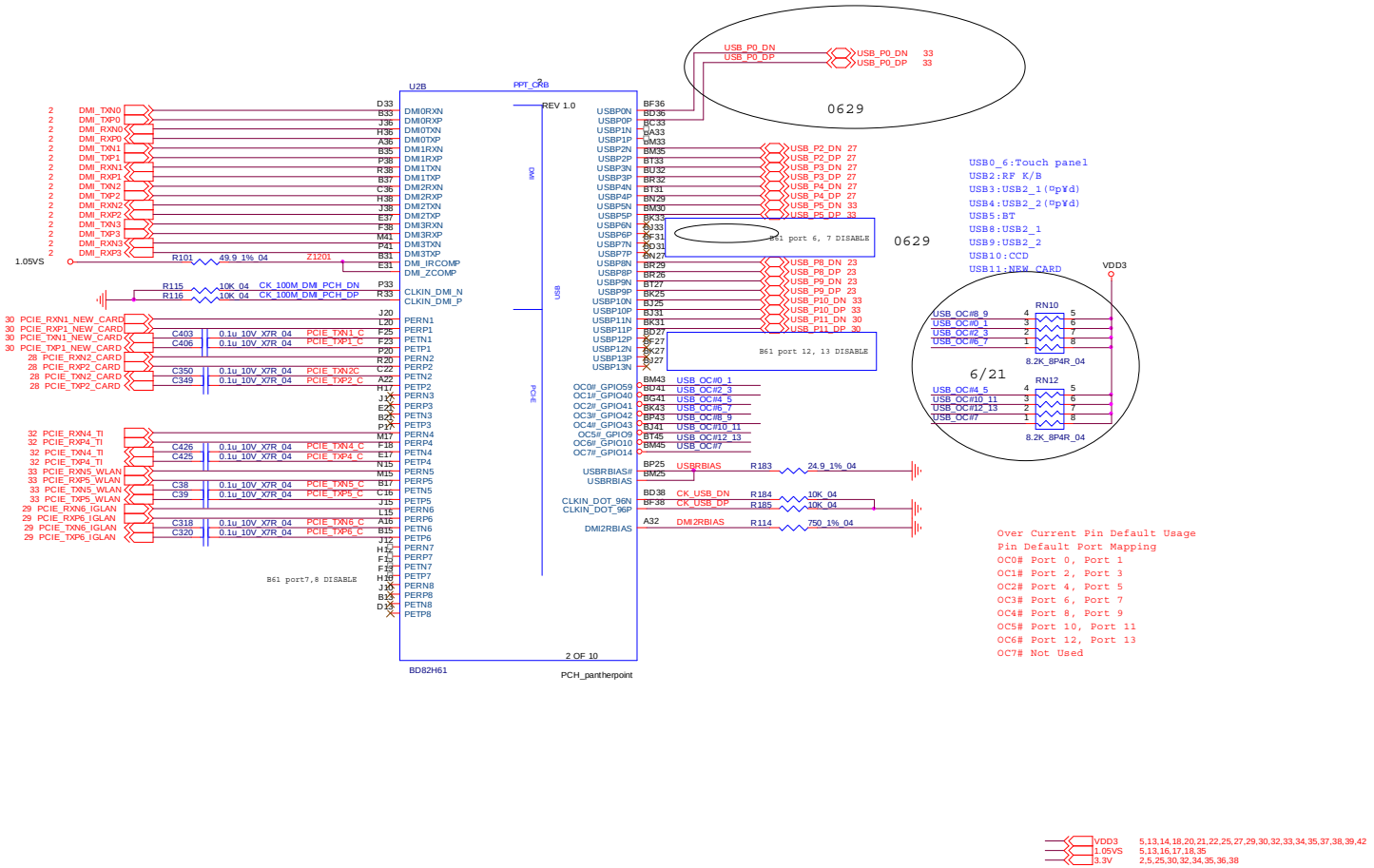

Over Current Pin Default Usage
Pin Default Port Mapping
OC0# Port 0, Port 1
OC1# Port 2, Port 3
OC2# Port 4, Port 5
OC3# Port 6, Port 7
OC4# Port 8, Port 9
OC5# Port 10, Port 11
OC6# Port 12, Port 13
OC7# Not Used

VDD3	5,13,14,18,20,21,22,25,27,29,30,32,33,34,35,37,38,39,42
1.05VS	5,13,16,17,18,35
3.3V	2,5,25,30,32,34,35,36,38

Sheet 12 of 45
PCH USB/PCIE/DMI

B.Schematic Diagrams

PCH SATA

Sheet 13 of 45
PCH SATA

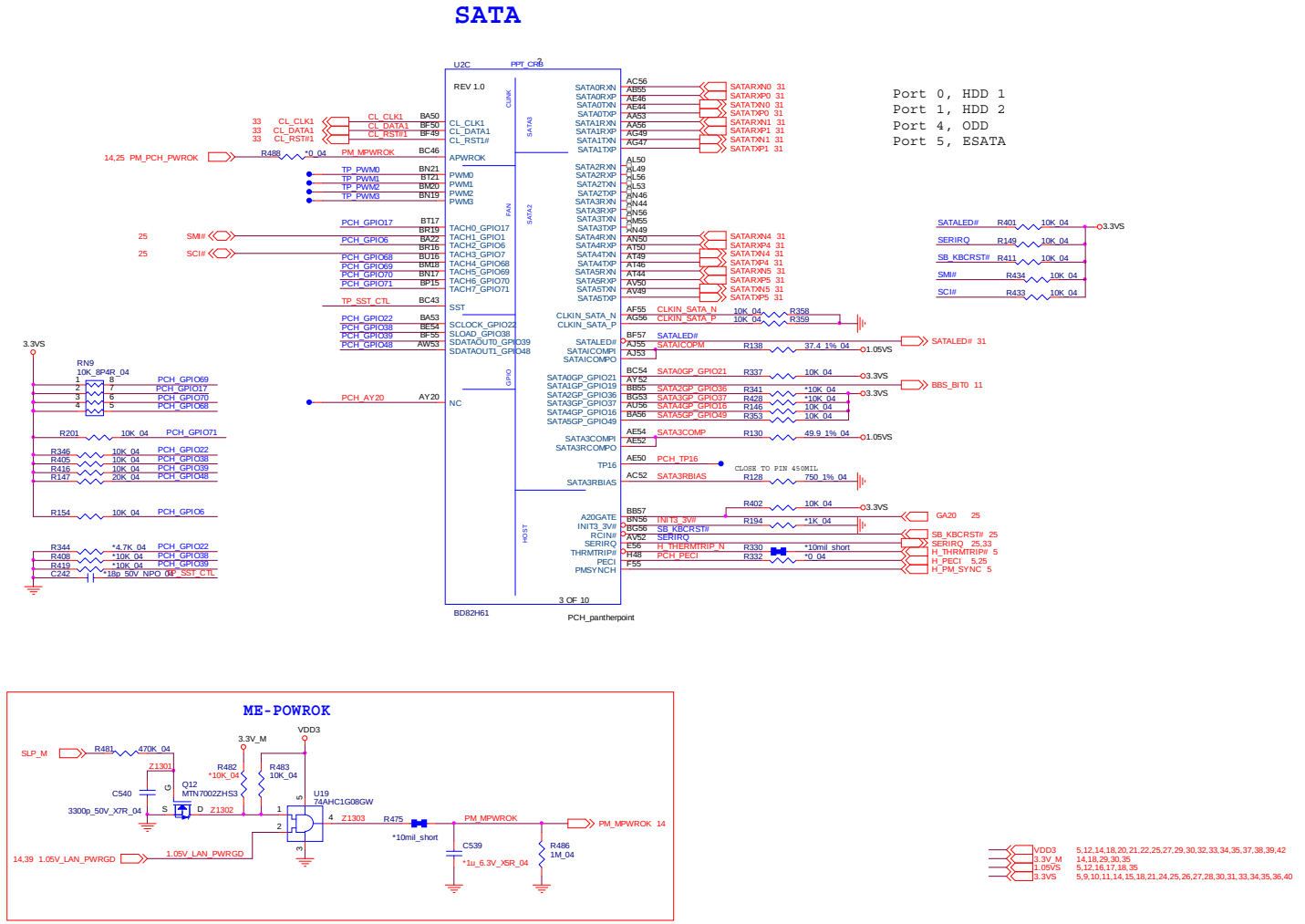

PCH GPIO/HDA

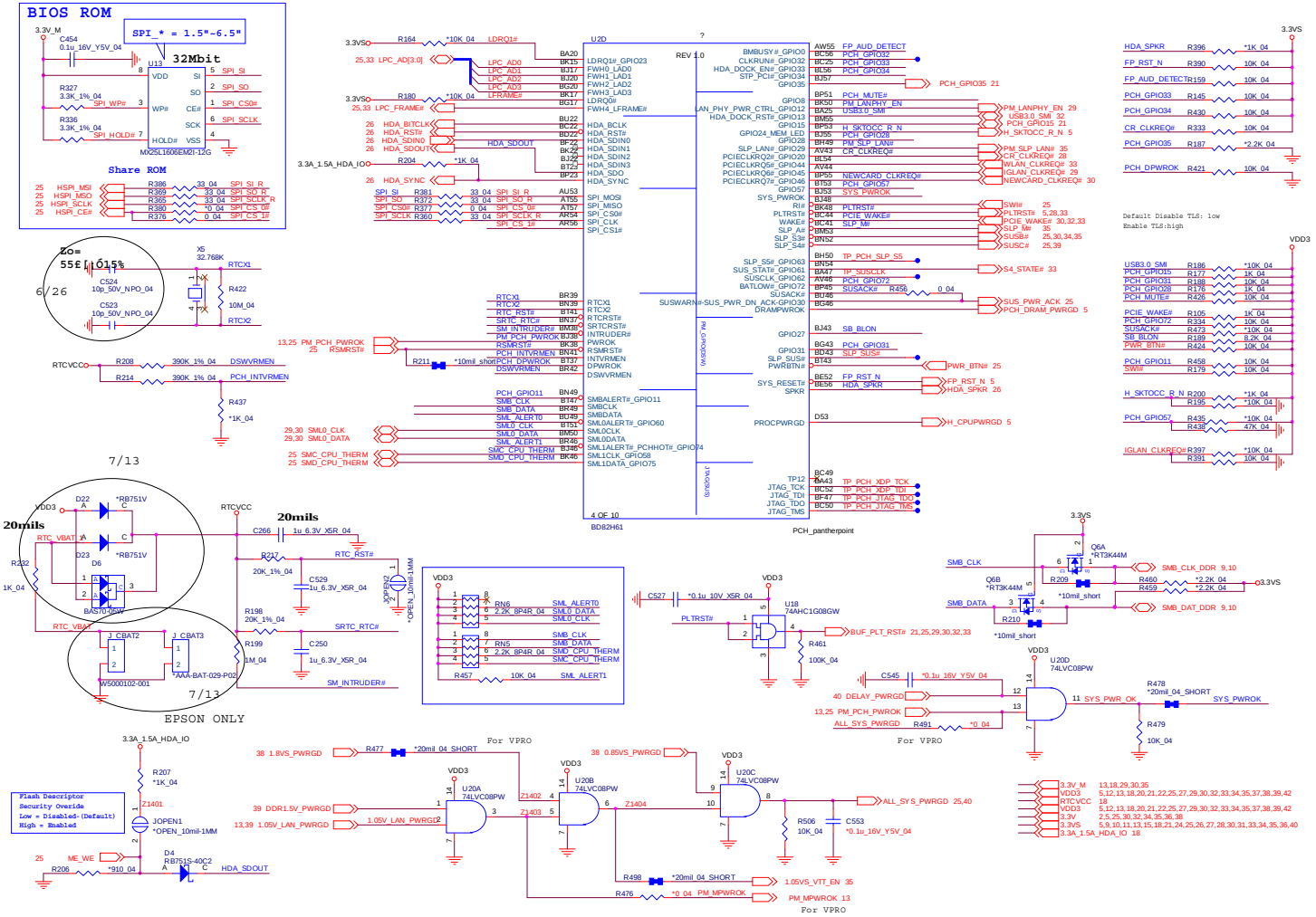

Sheet 14 of 45
PCH GPIO/HDA

PCH NVRAM/HDMI

Sheet 15 of 45
PCH NVRAM/HDMI

HDMI

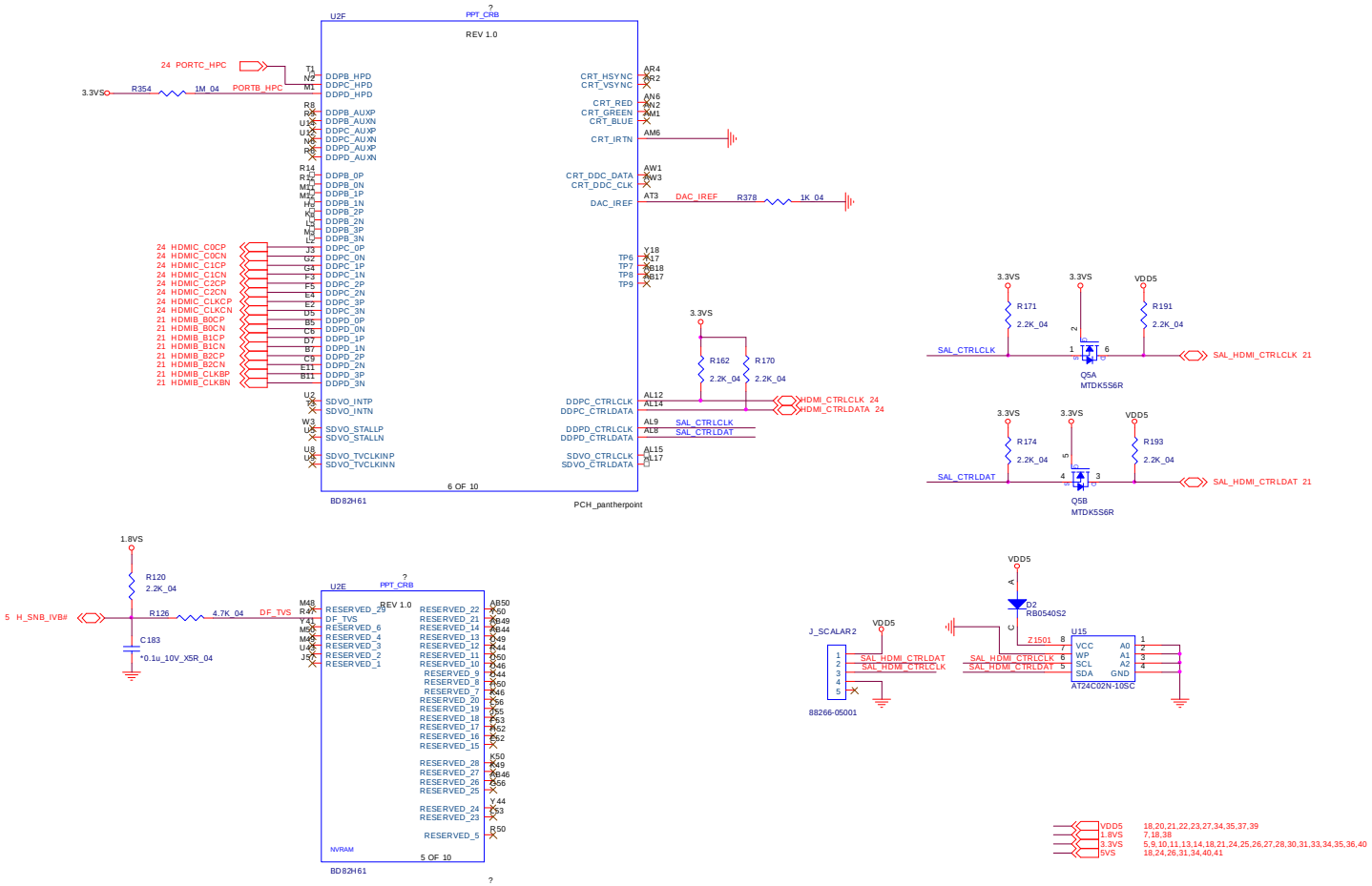

PCH FDI/USB3/Clock

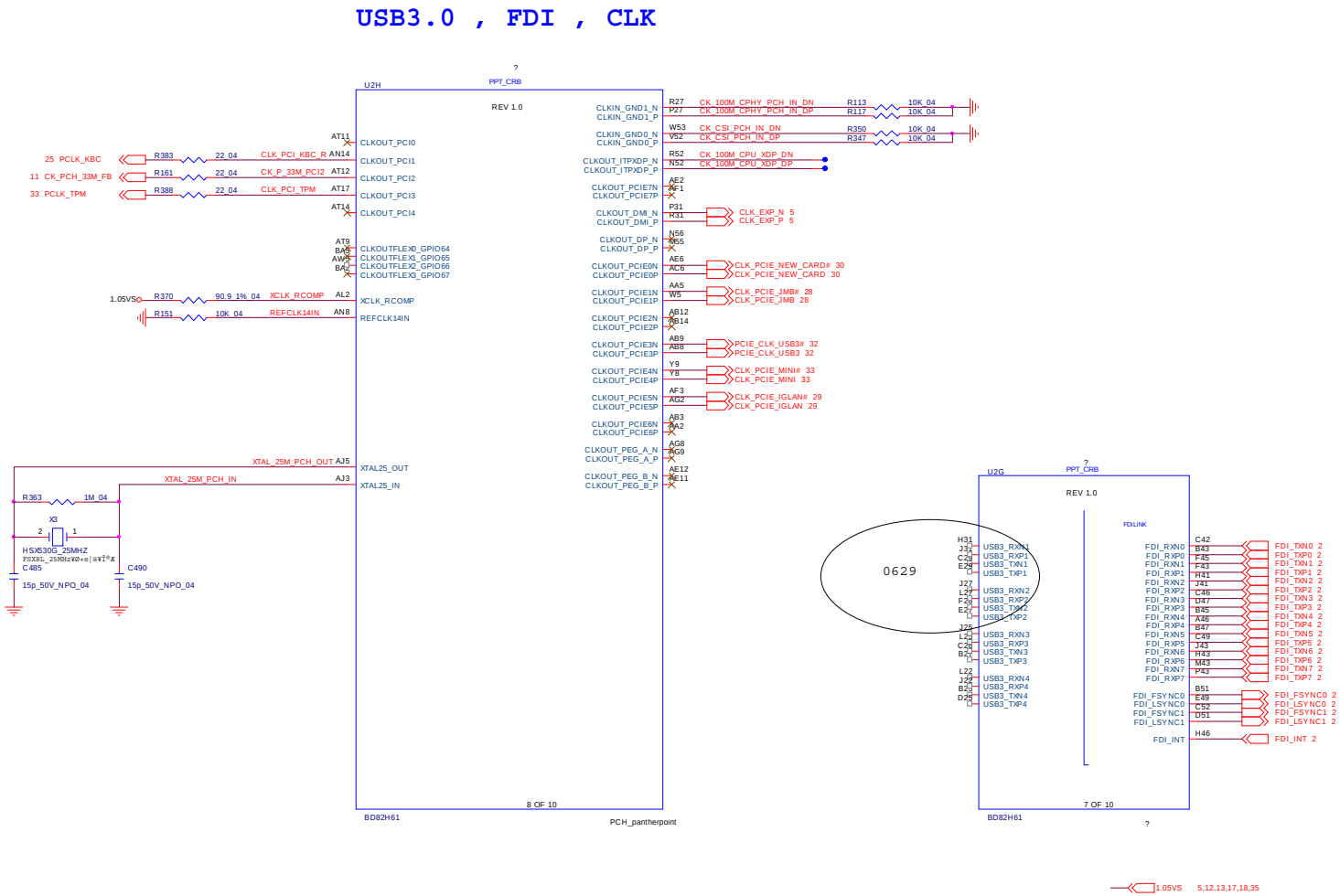

Sheet 16 of 45
PCH FDI/USB3/
Clock

PCH Power

Sheet 17 of 45
PCH Power

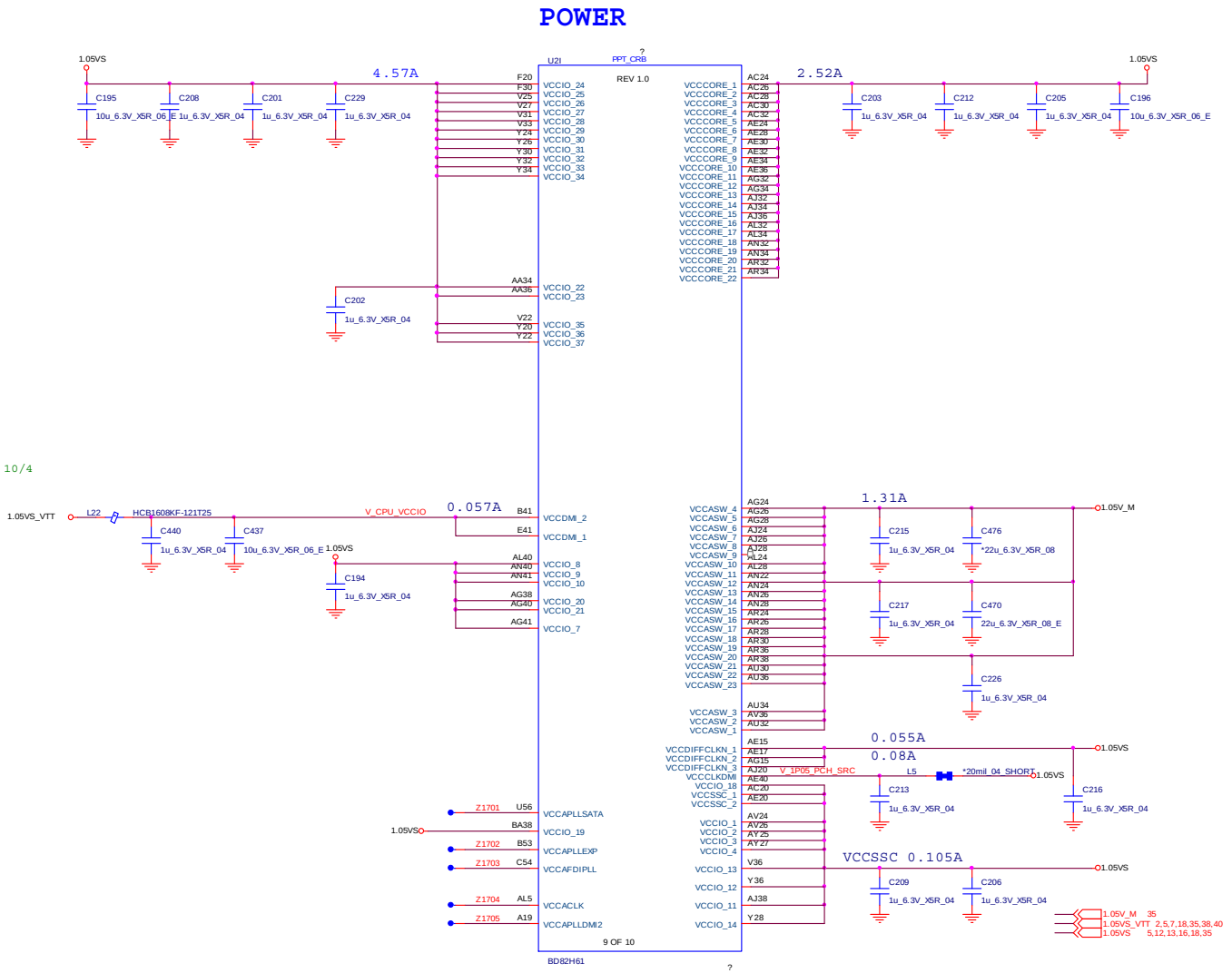

PCH Power

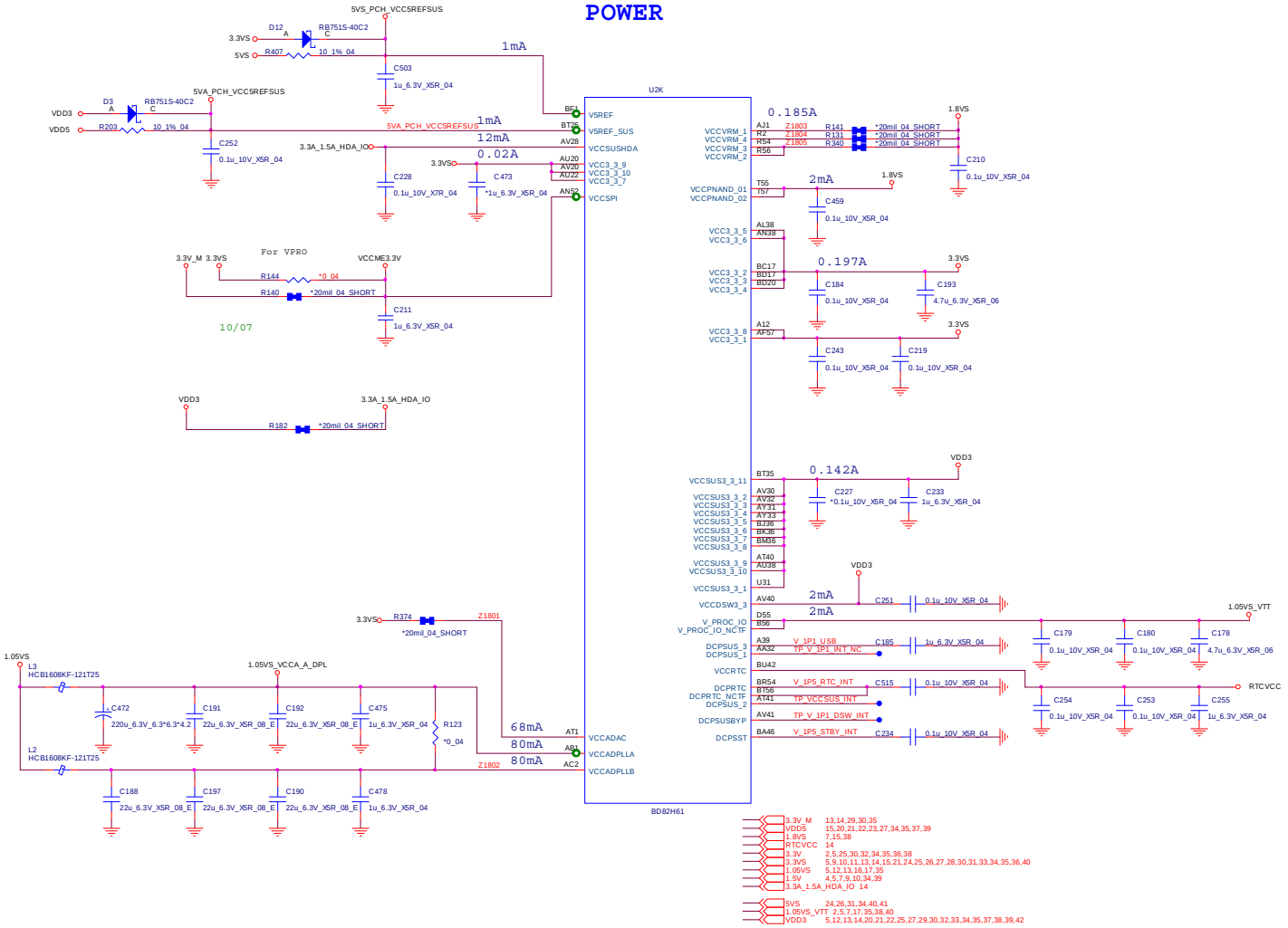

Sheet 18 of 45
PCH Power

PCH GND

Sheet 19 of 45
PCH GND

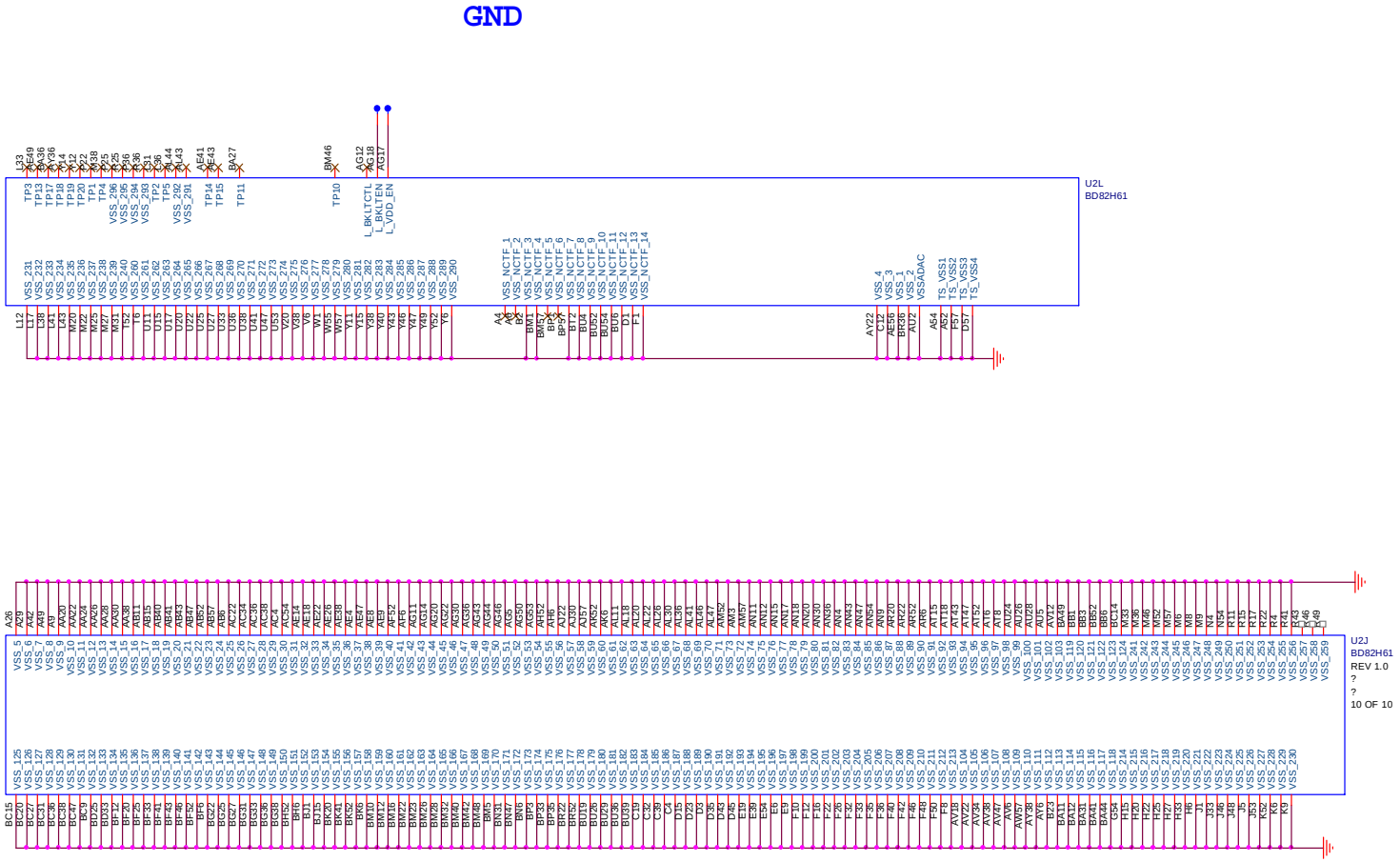

LVDS, Inverter

PANEL CONNECTOR

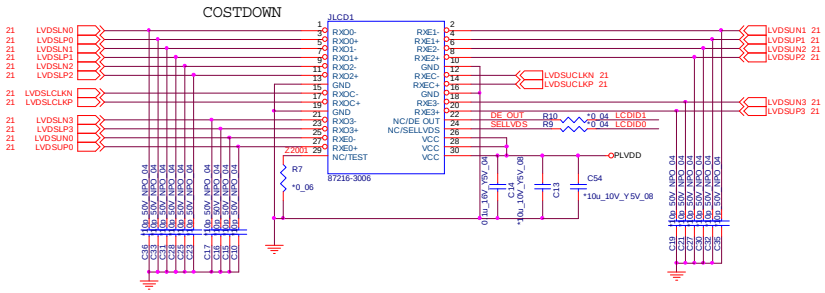

PANEL ID SELECTOR

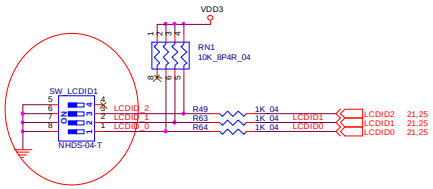

Sheet 20 of 45
LVDS, Inverter

PANEL POWER

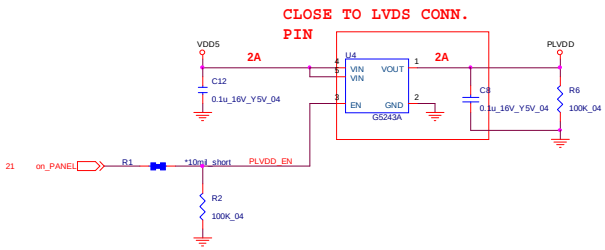

INVERTER CONNECTOR

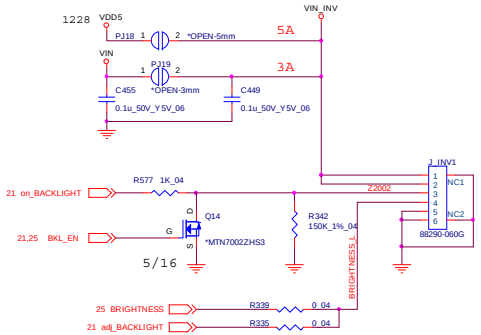

VIN	34,37,39,40,41,42
VDD5	15,18,21,22,23,27,34,35,37,39
VDD3	5,12,13,14,18,21,22,25,27,29,30,32,33,34,35,37,38,39,42
3.3VS	5,9,10,11,13,14,15,18,21,24,25,26,27,28,30,31,33,34,35,36,40
3.3V	2,5,25,30,32,34,35,36,38

SCALAR

Sheet 21 of 45
Scalar

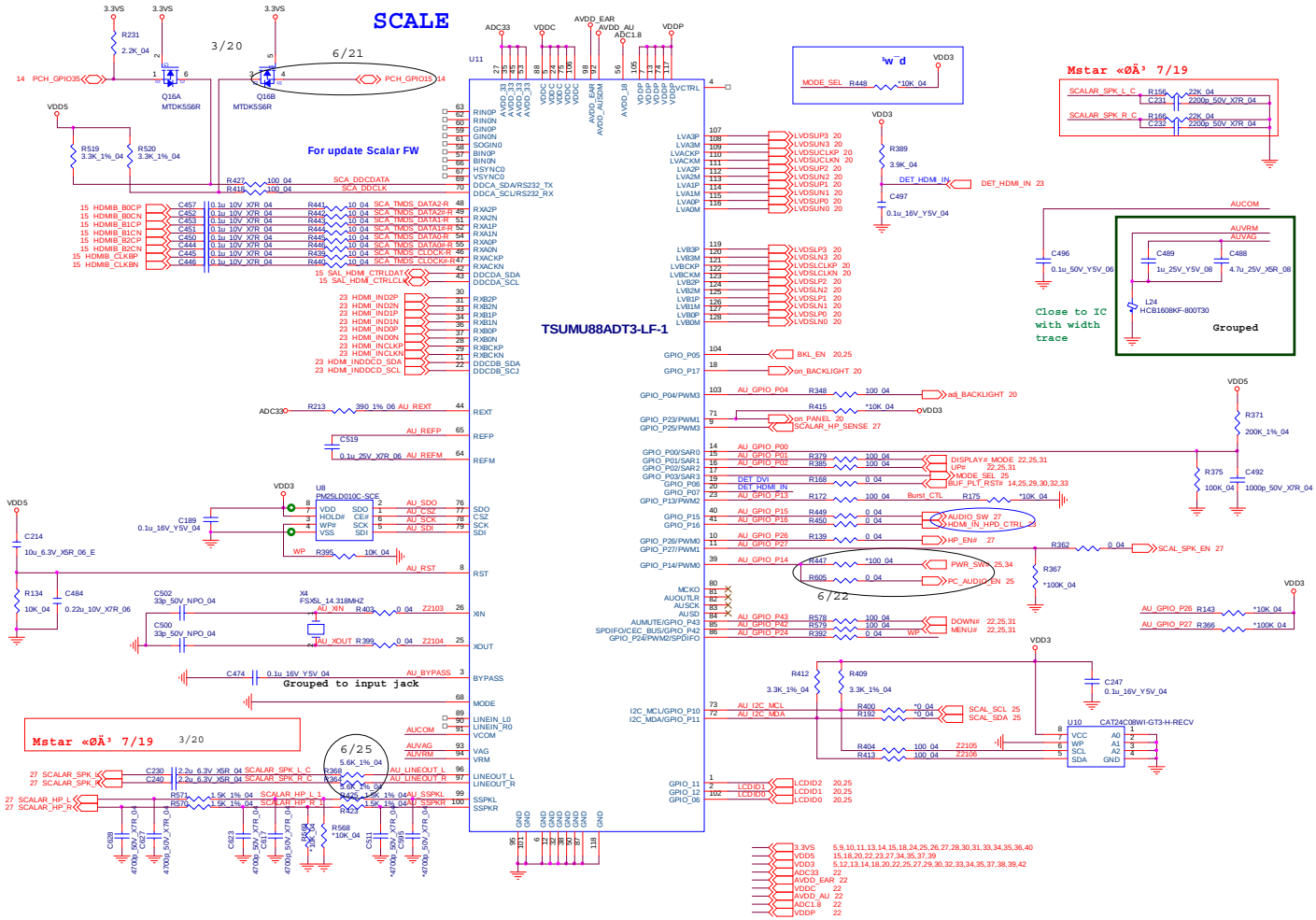

SCALAR-1

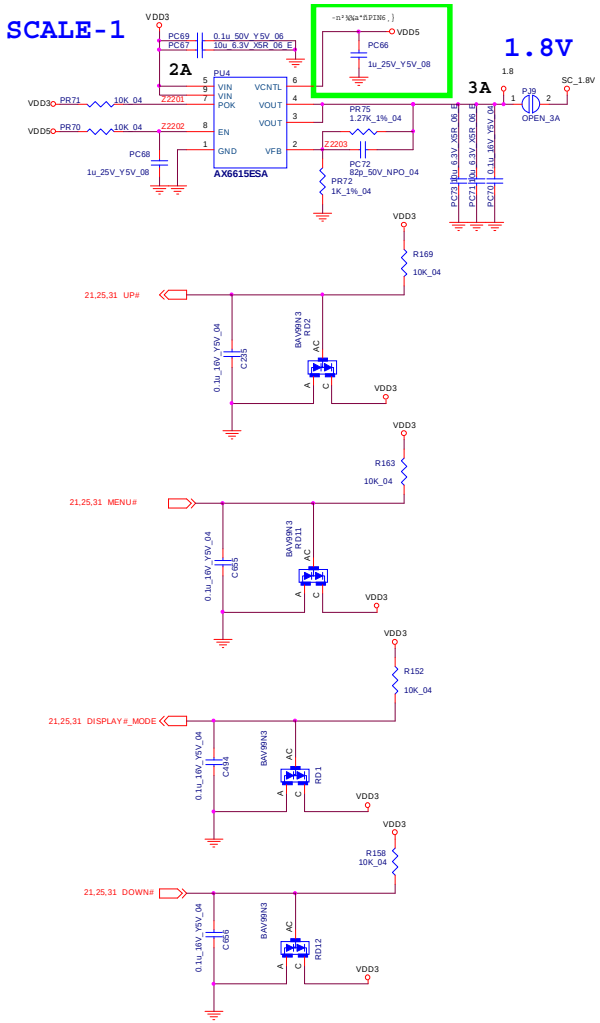

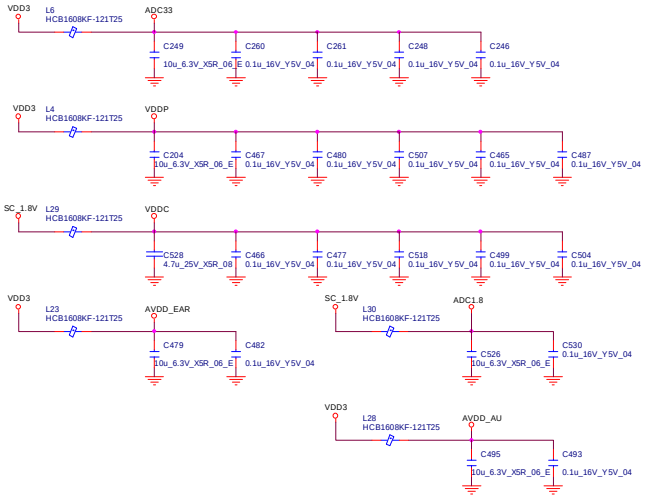

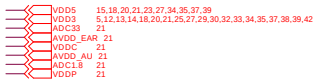

Sheet 22 of 45
SCALAR-1

HDMI IN, USB2.0*2

Sheet 23 of 45
HDMI IN, USB2.0*2

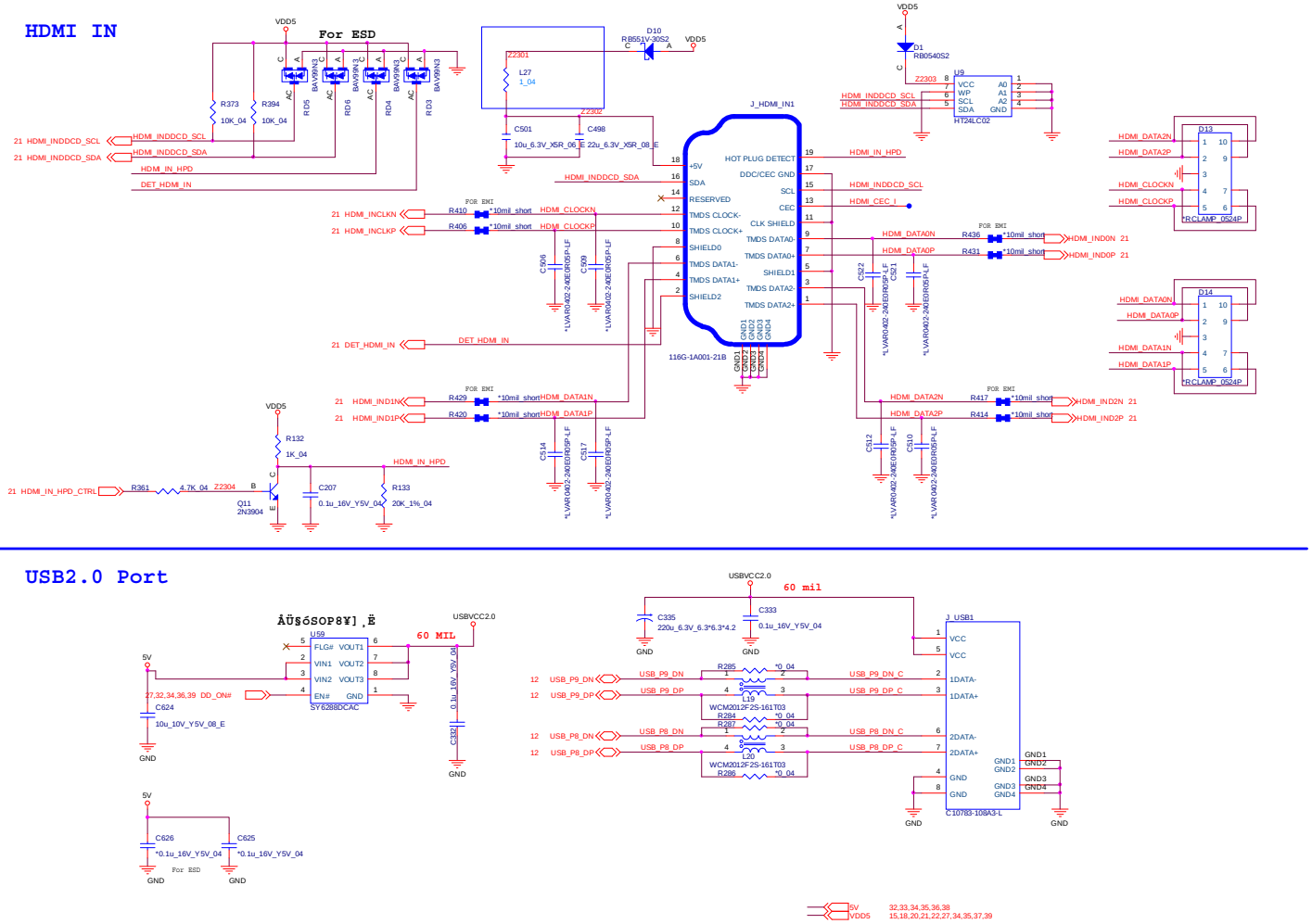

HDMI OUT

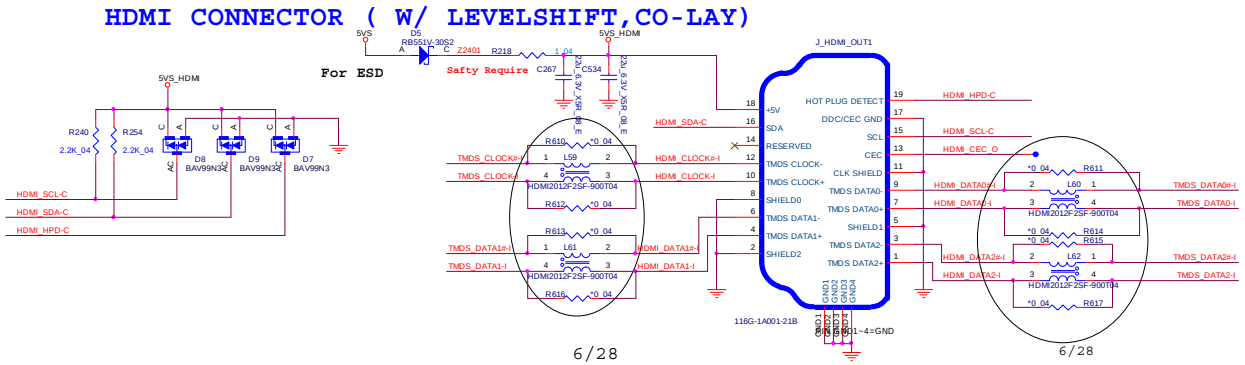

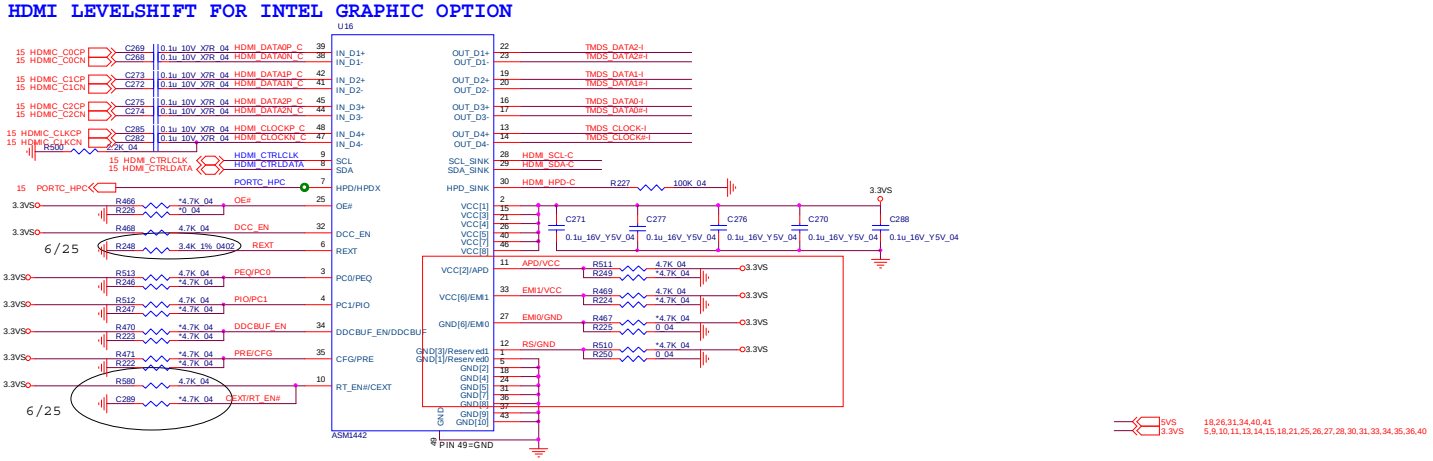

Sheet 24 of 45
HDMI OUT

KBC-ITE IT8518

Sheet 25 of 45
KBC-ITE IT8518

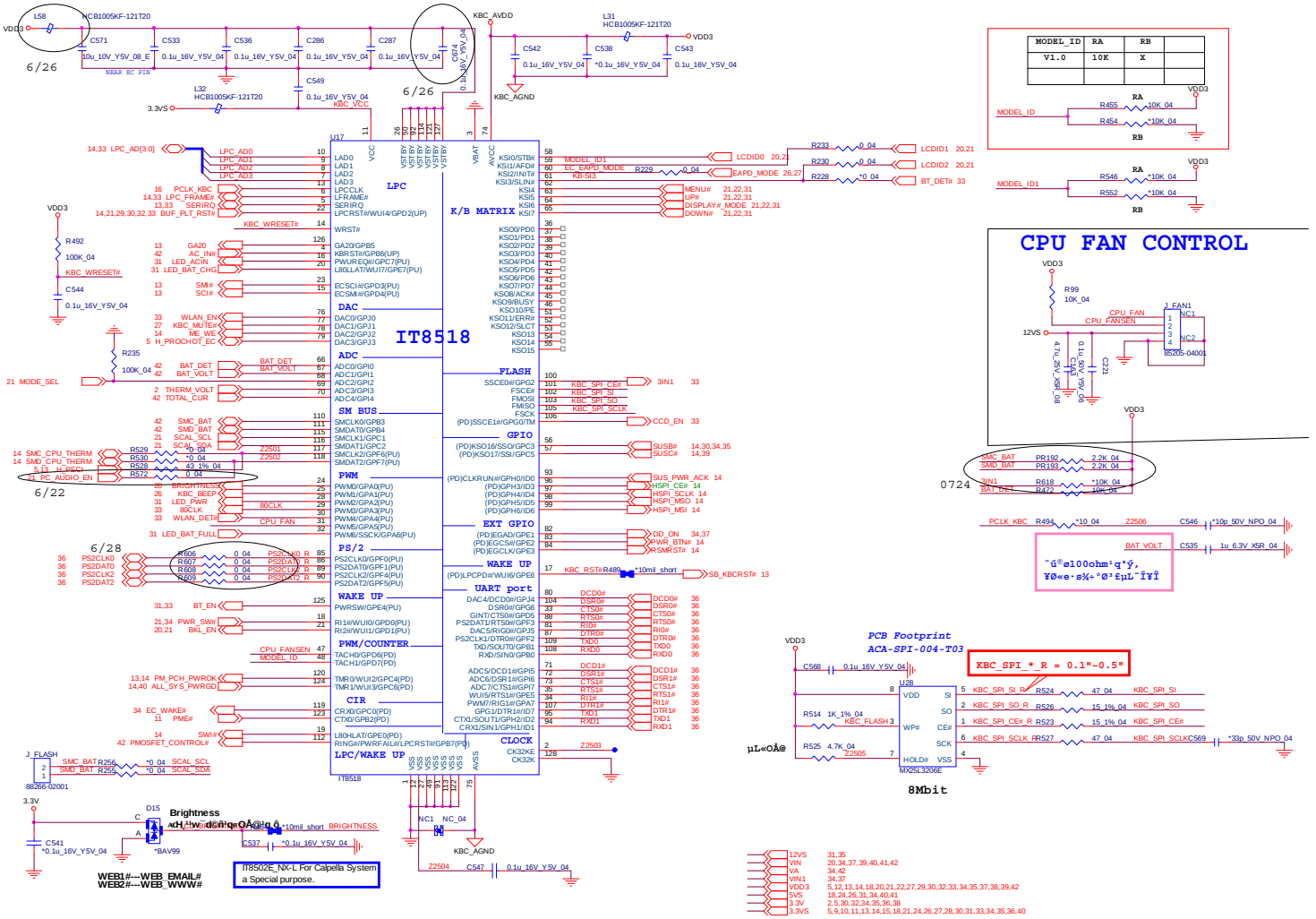

Audio Codec ALC269

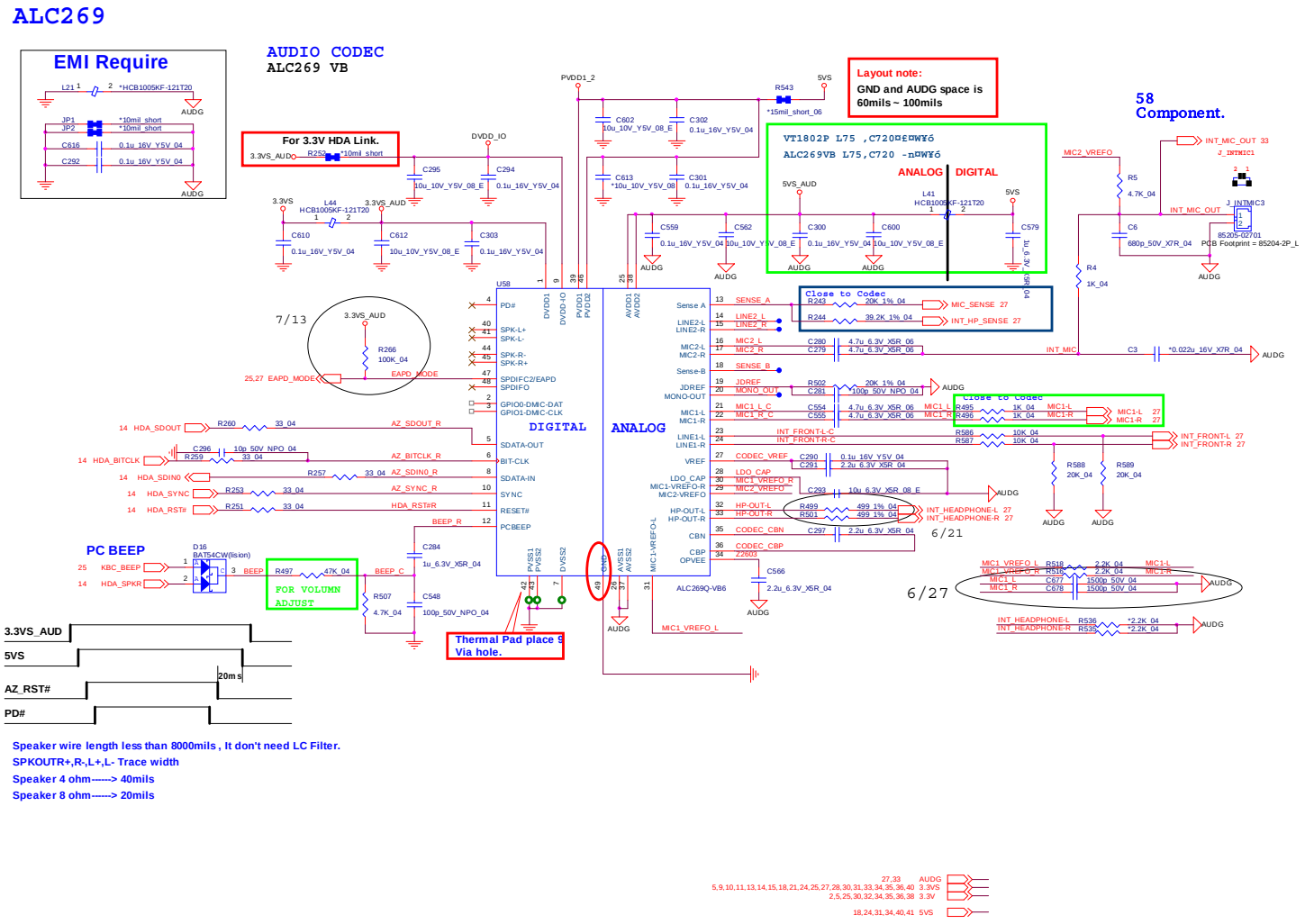

Sheet 26 of 45
Audio Codec
ALC269

AMP2607 & Audio Switch

Sheet 27 of 45
AMP2607 & Audio Switch

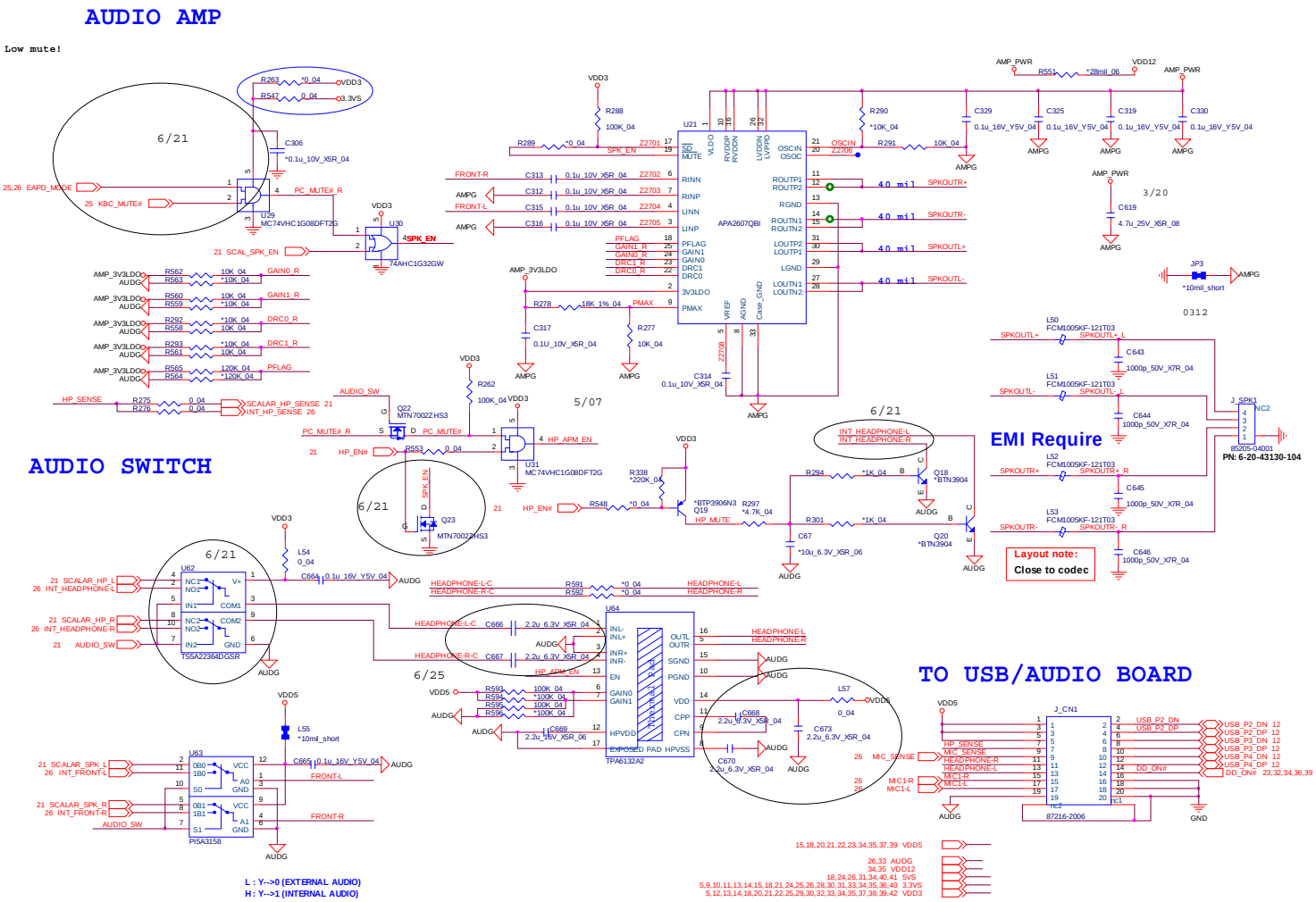

Card Reader / RTS5229

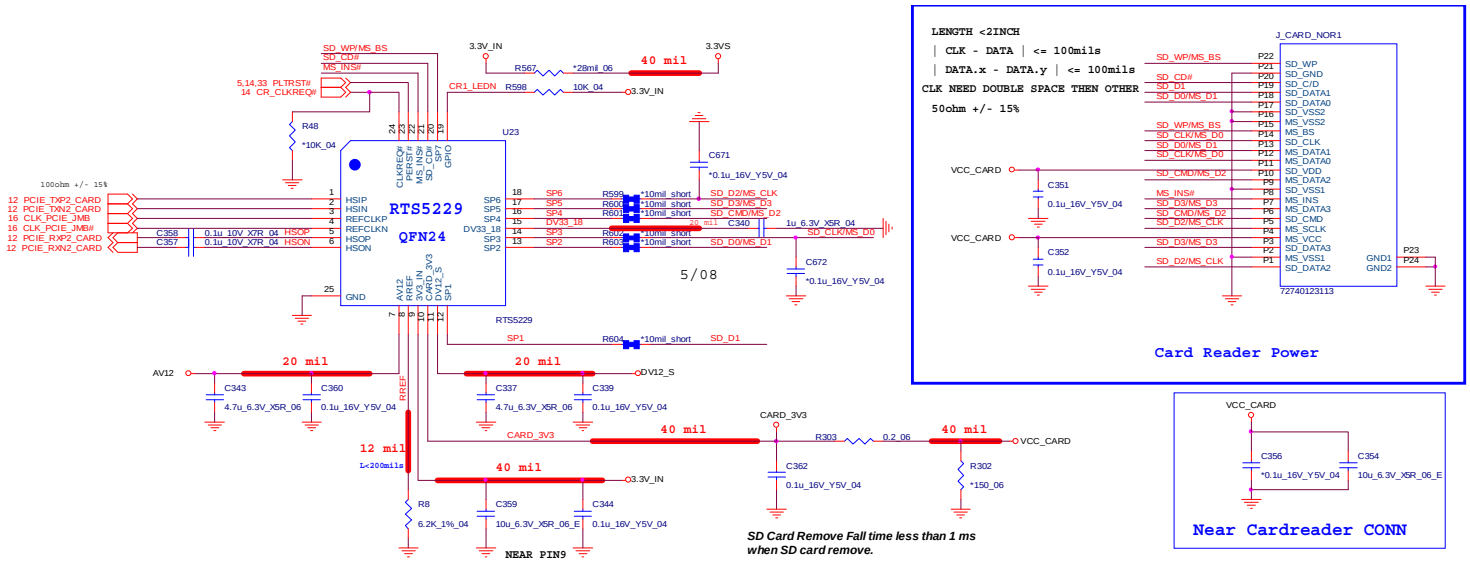

Sheet 28 of 45
Card Reader / RTS5229

LAN (Intel LAN82579)

Sheet 29 of 45
LAN (Intel LAN82579)

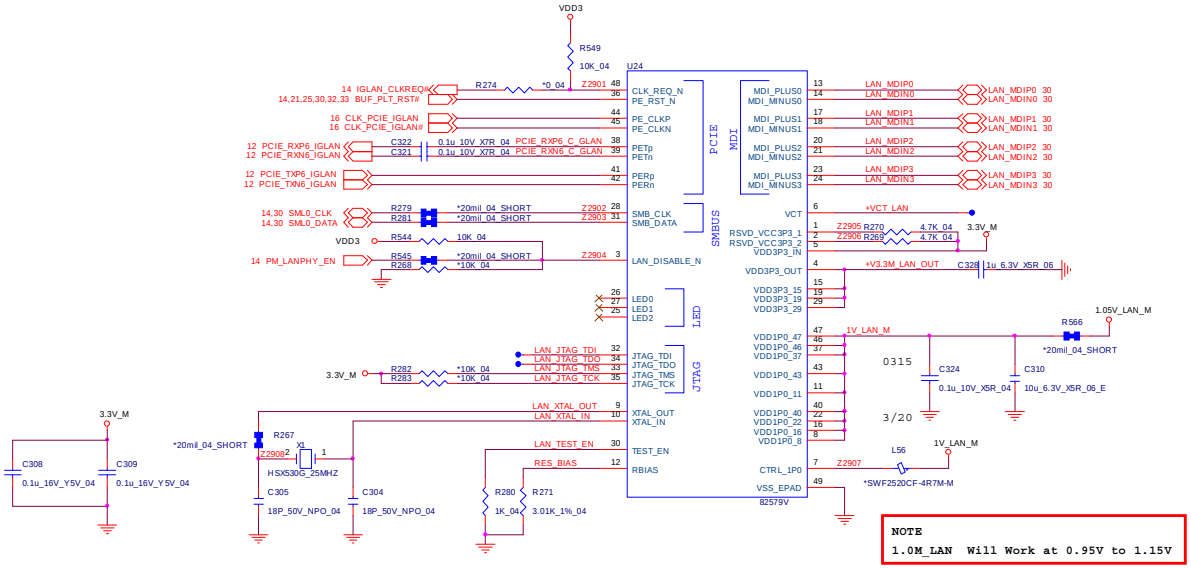

LAN CON/New Card

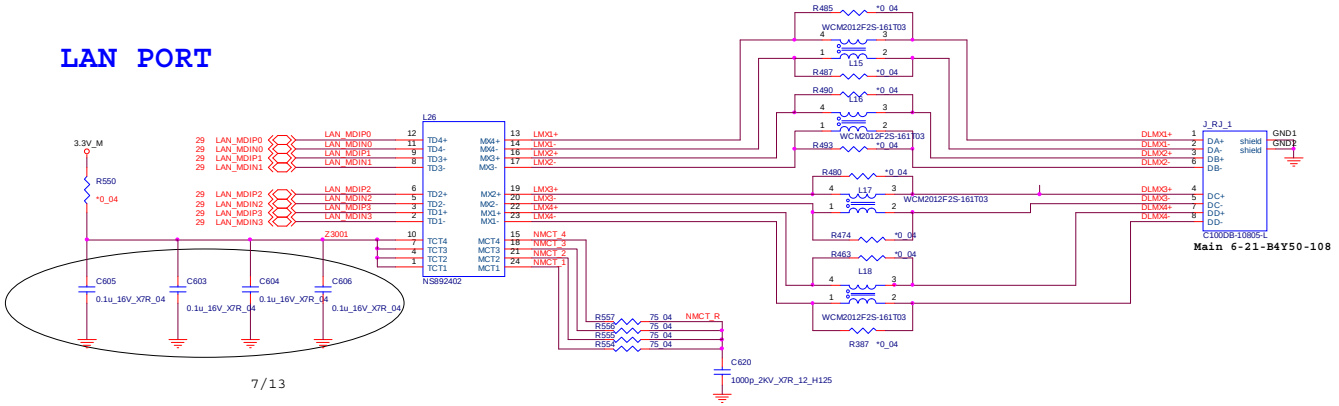

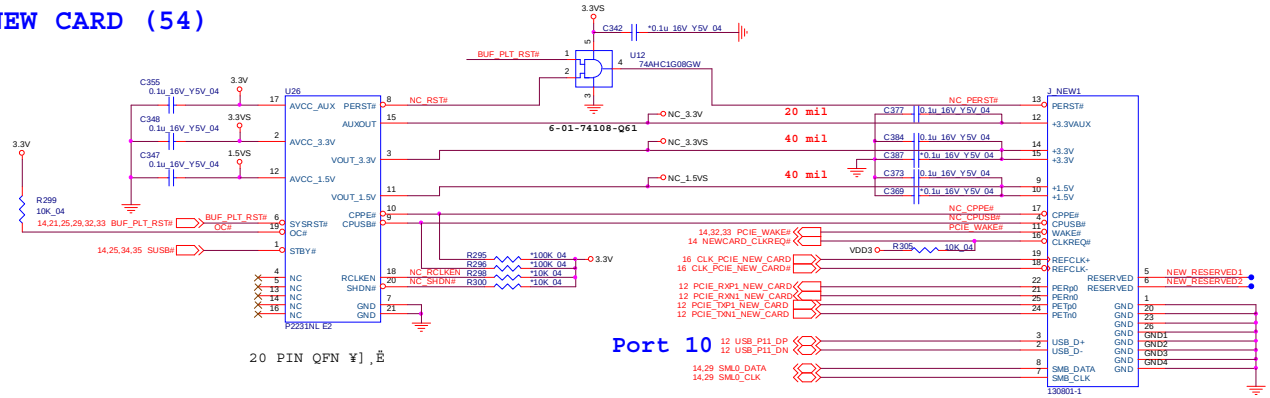

Sheet 30 of 45
LAN CON/New Card

HDD/ODD/ESATA

Sheet 31 of 45
HDD/ODD/ESATA

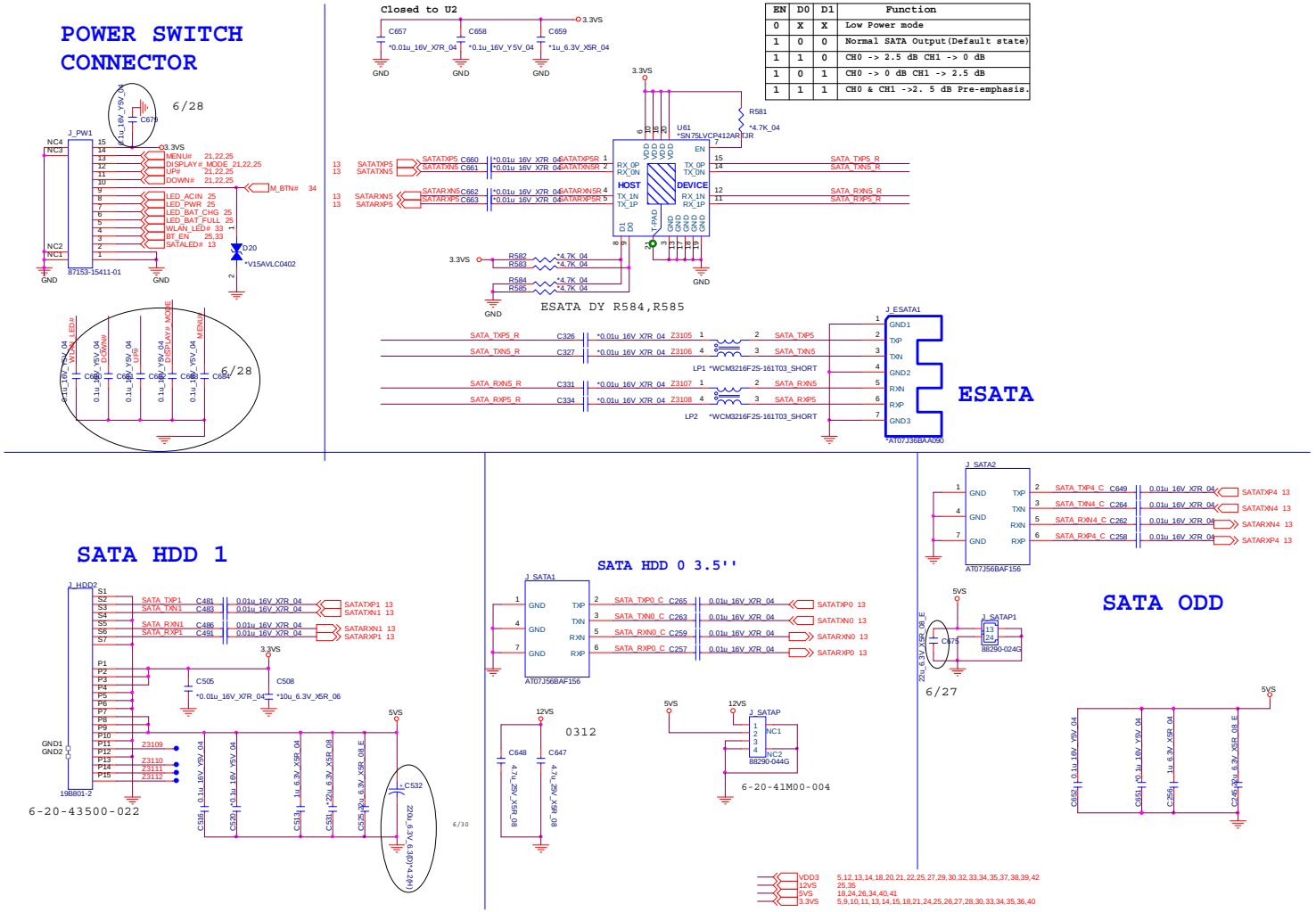

EN	D0	D1	Function
0	X	X	Low Power mode
1	0	0	Normal SATA Output(Default state)
1	1	0	CH0 -> 2.5 dB CH1 -> 0 dB
1	0	1	CH0 -> 0 dB CH1 -> 2.5 dB
1	1	1	CH0 & CH1 ->2. 5 dB Pre-emphasis.

USB3.0

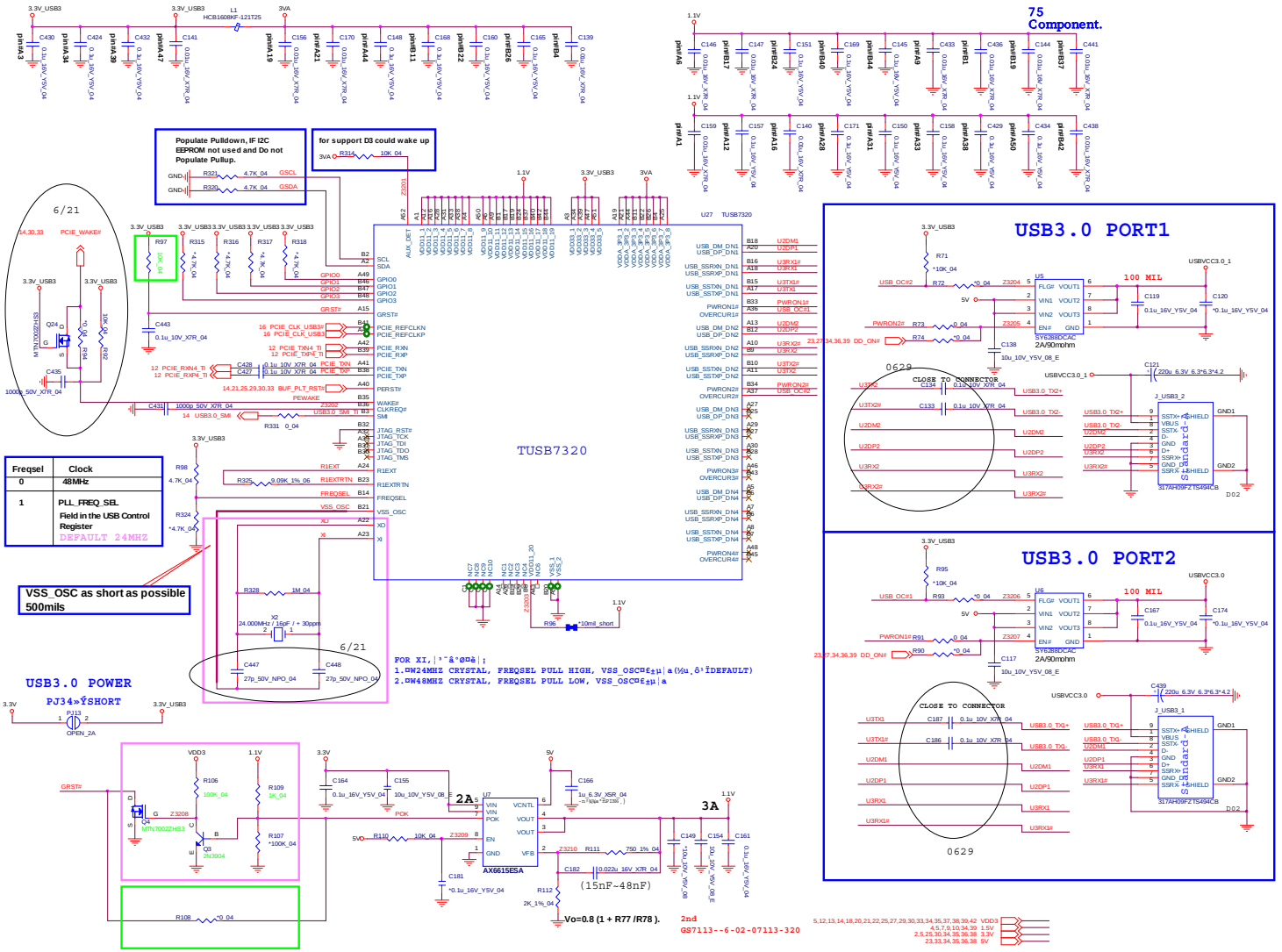

Sheet 32 of 45
USB3.0

WLAN/TPM1.2/CCD/TP

Sheet 33 of 45
WLAN/TPM1.2/
CCD/TP

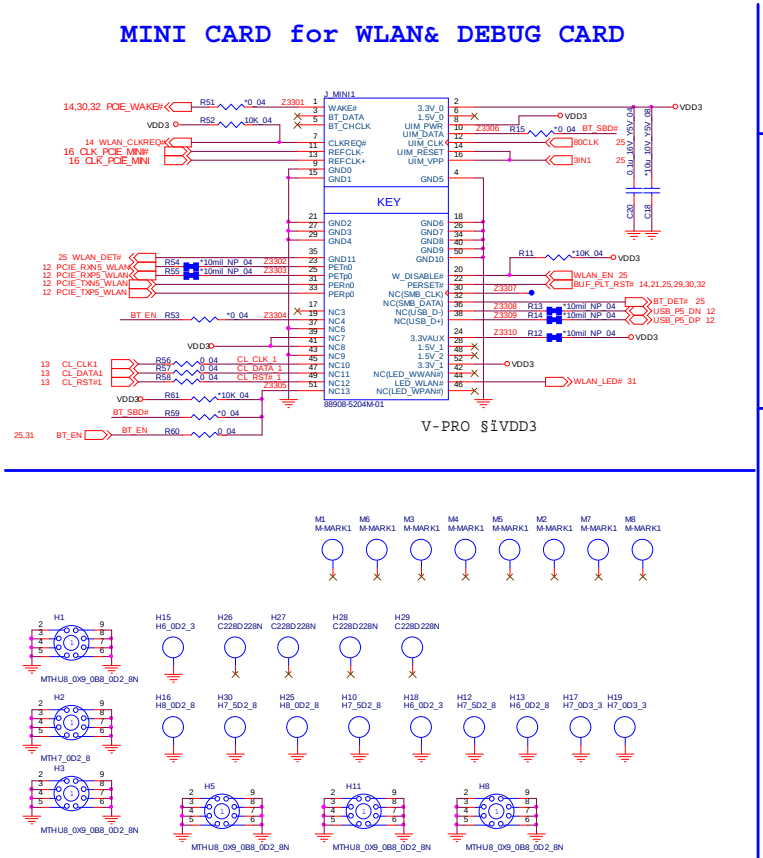

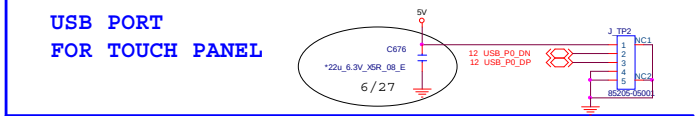

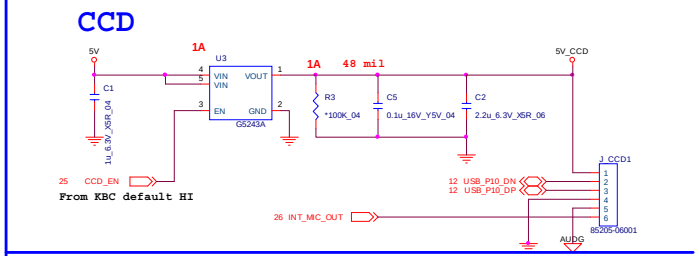

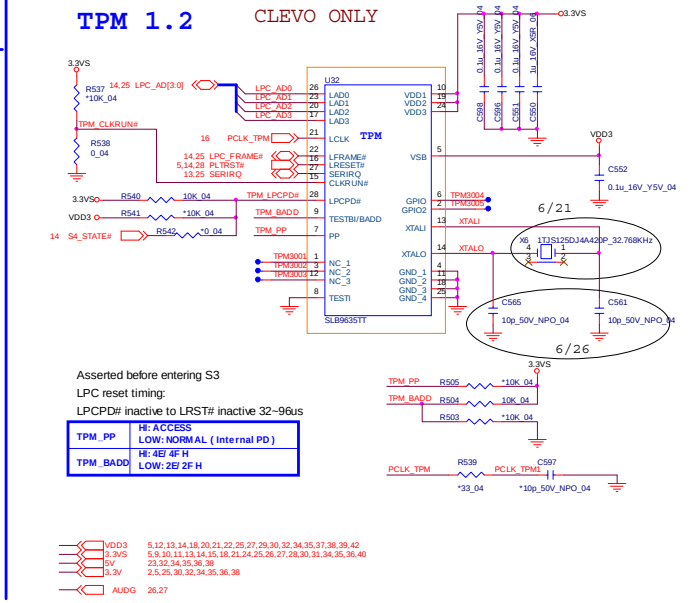

5VS, 3VS, 1.5VS_CPU, 12V

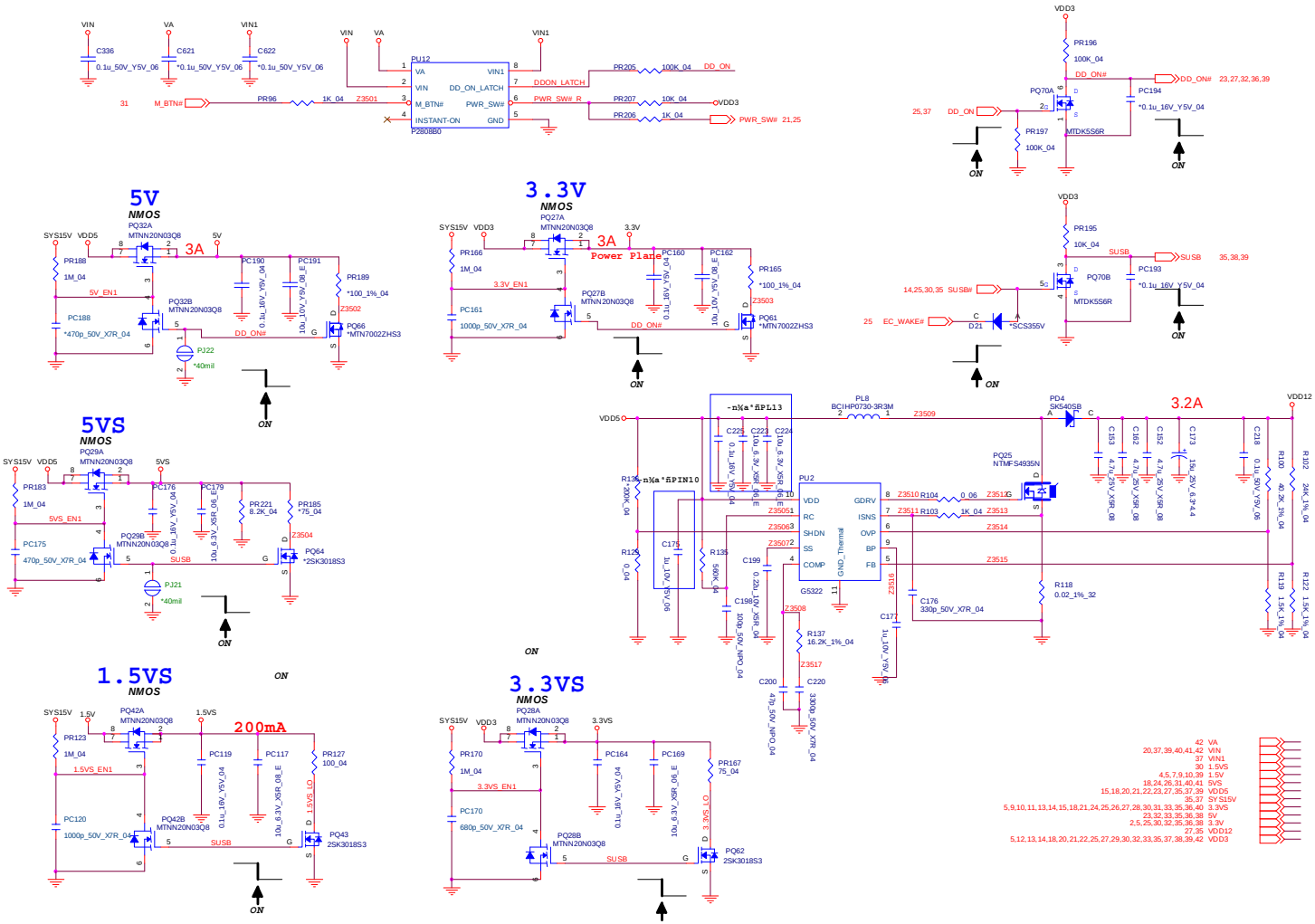

Sheet 34 of 45
5VS, 3VS,
1.5VS_CPU, 12V

3.3V_M, 1.05V_M, 1.05VS_VTT

Sheet 35 of 45
3.3V_M, 1.05V_M,
1.05VS_VTT

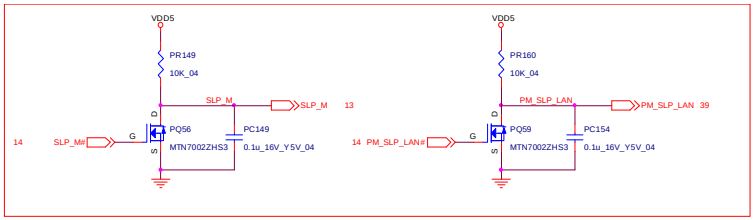

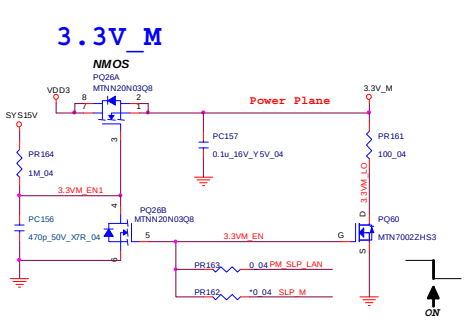

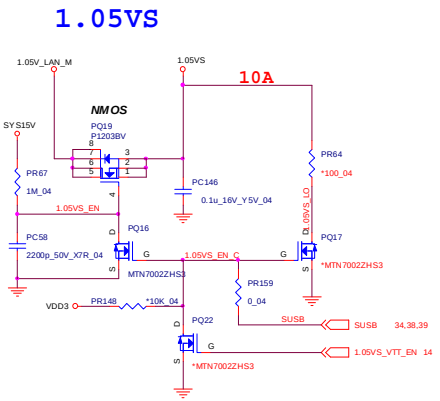

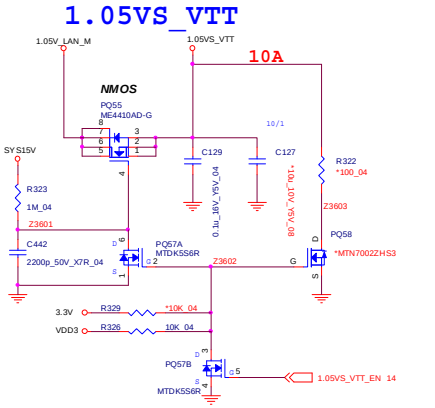

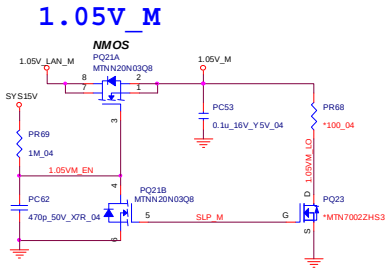

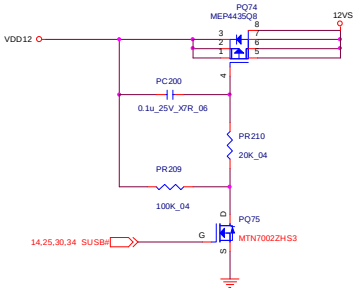

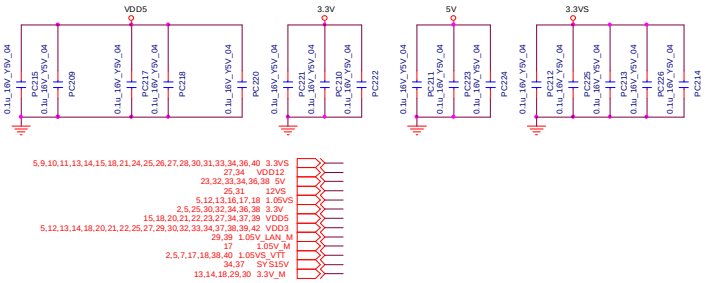

COM Port / PS2

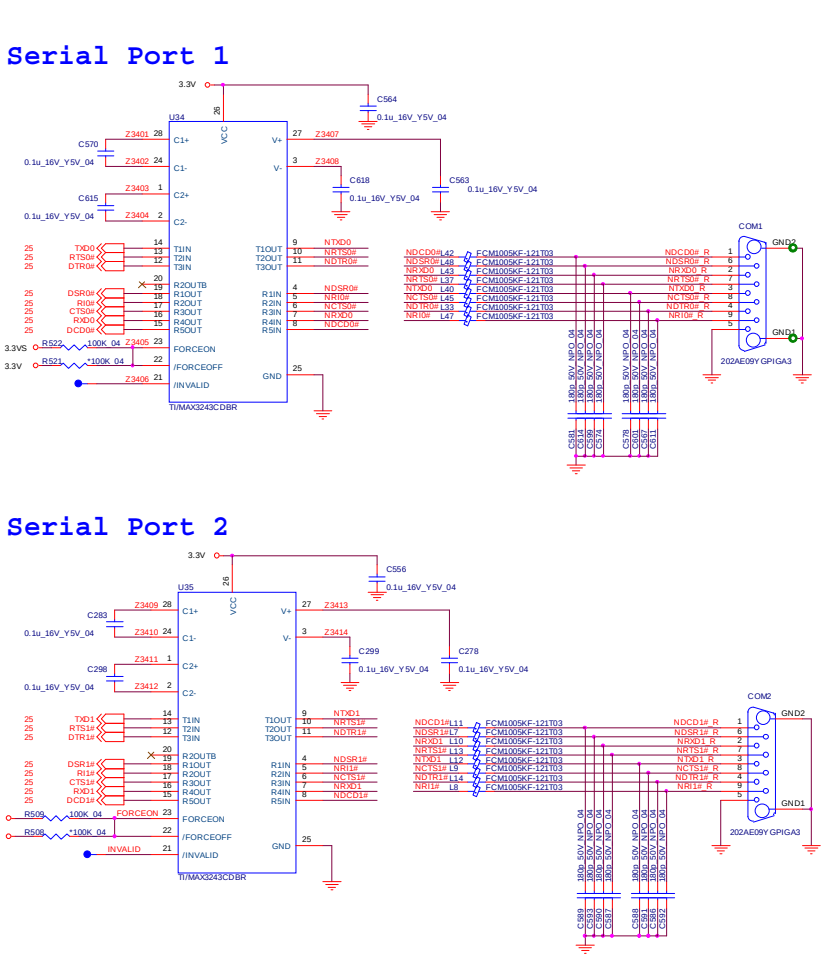

Sheet 36 of 45
COM Port / PS2

VDD3, VDD5

Sheet 37 of 45
VDD3, VDD5

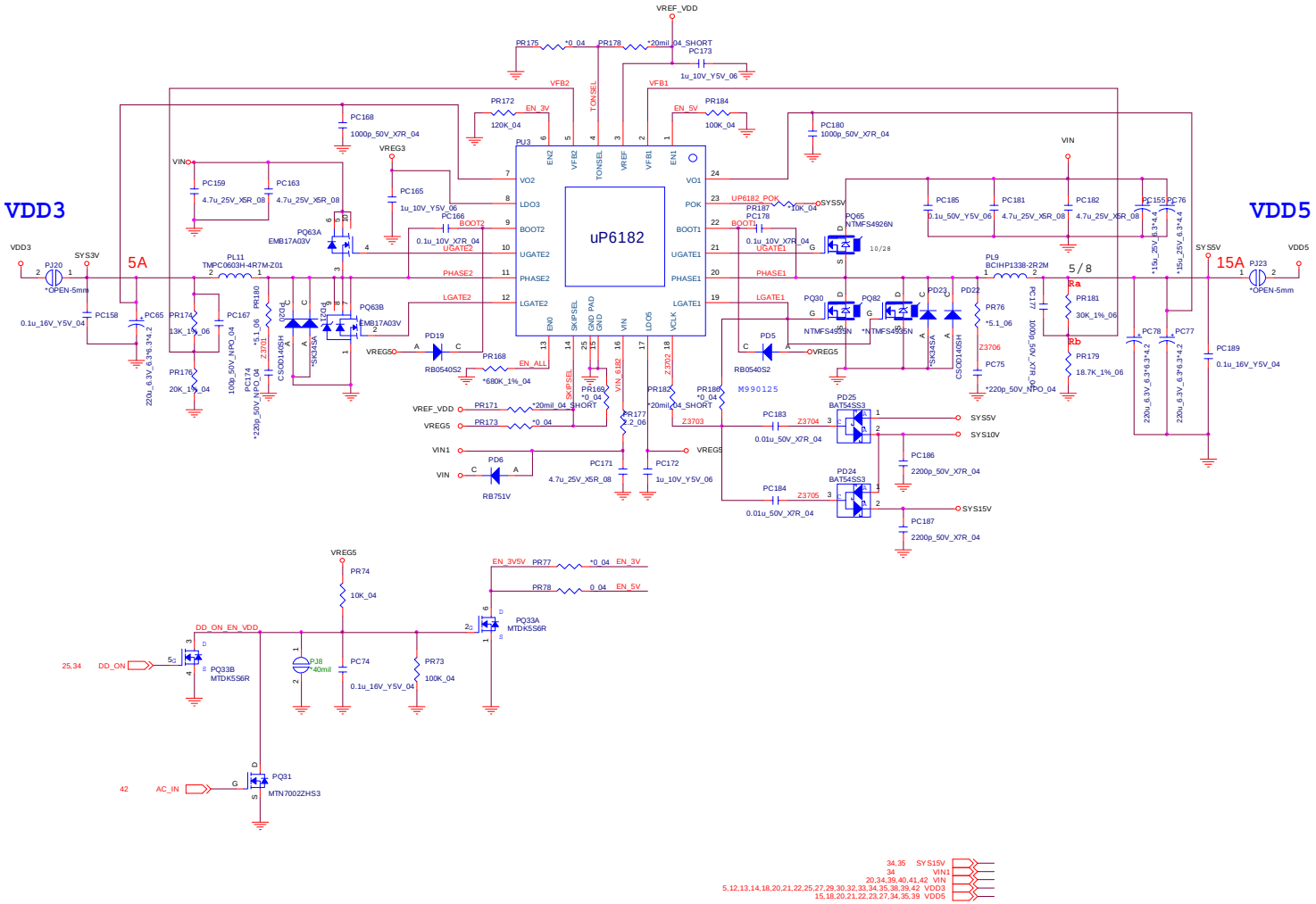

Power 0.925V/1.8VS

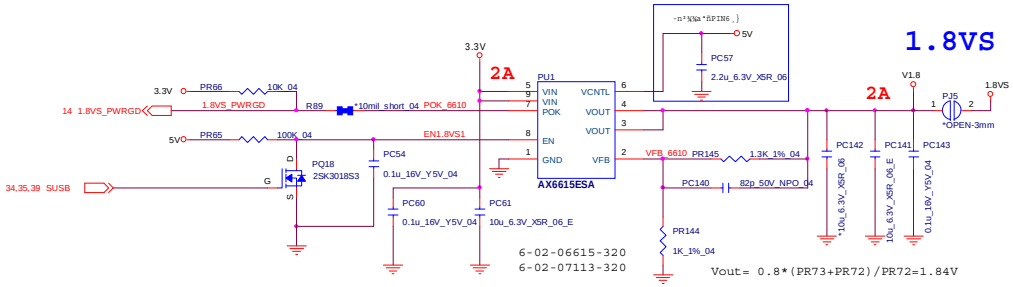

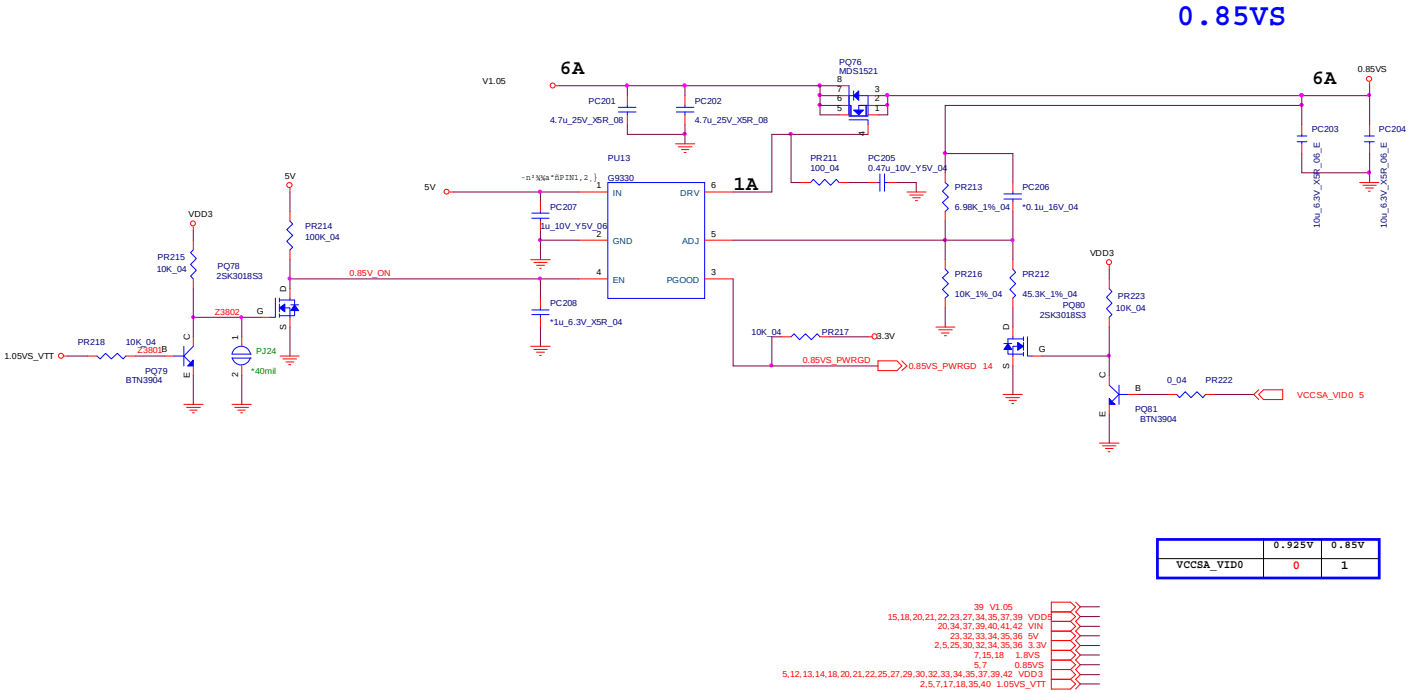

	0.925V	0.85V
VCCSA_VID0	0	1

39 V1.05
15,18,20,21,22,23,27,34,35,37,39 VDD3
20,34,37,39,40,41,42 VIN
23,32,33,34,35,36 5V
2,5,25,30,32,34,35,36 3.3V
7,15,18 1.8VS
5,7 0.85VS
5,12,13,14,18,20,21,22,25,27,29,30,32,33,34,35,37,39,42 VDD3
2,5,7,17,18,35,40 1.05VS_VTT

Sheet 38 of 45
Power 0.925V/ 1.8VS

Power 1.5V/1.05VS

Sheet 39 of 45
Power 1.5V/1.05VS

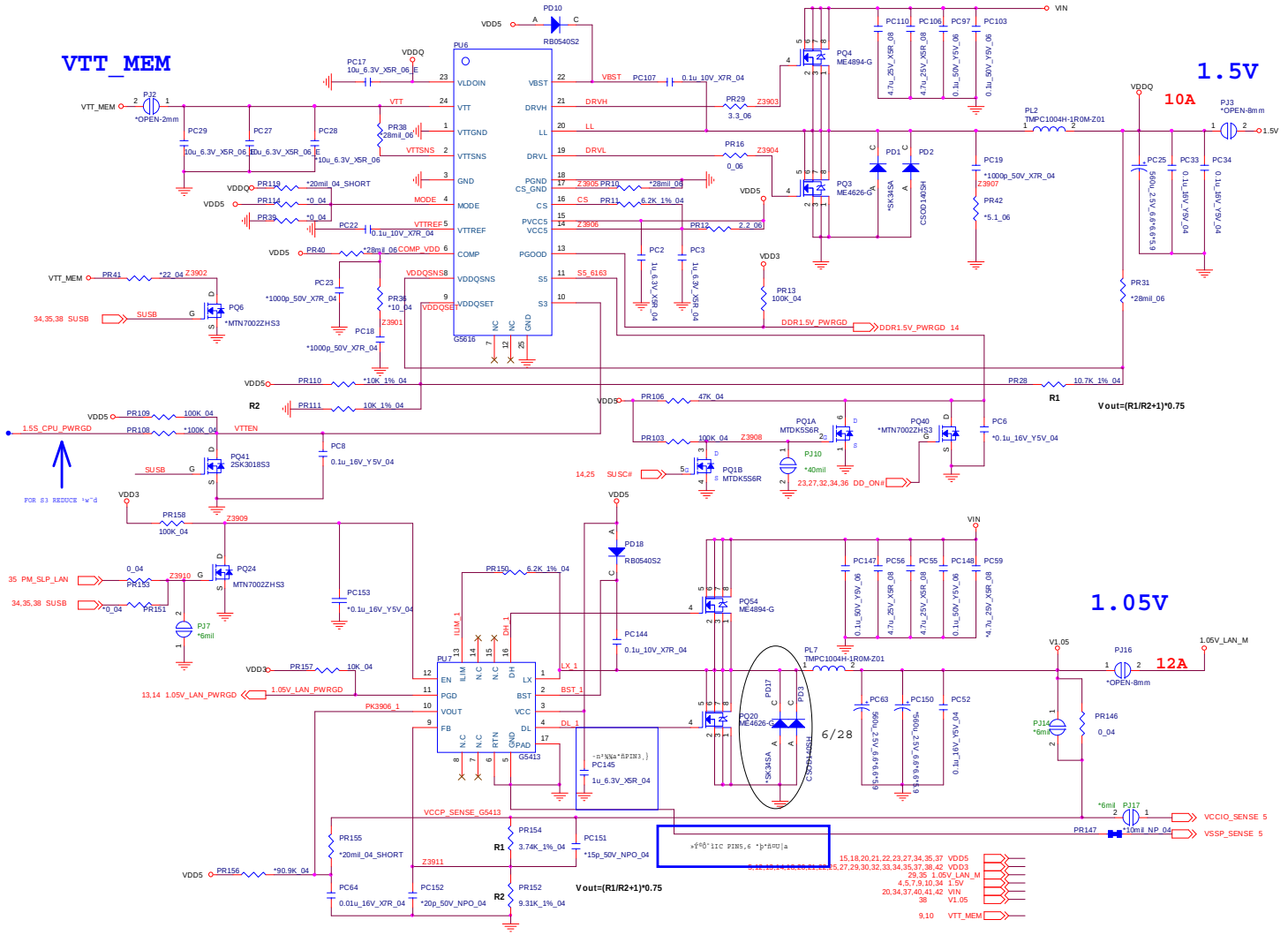

Power VCORE1

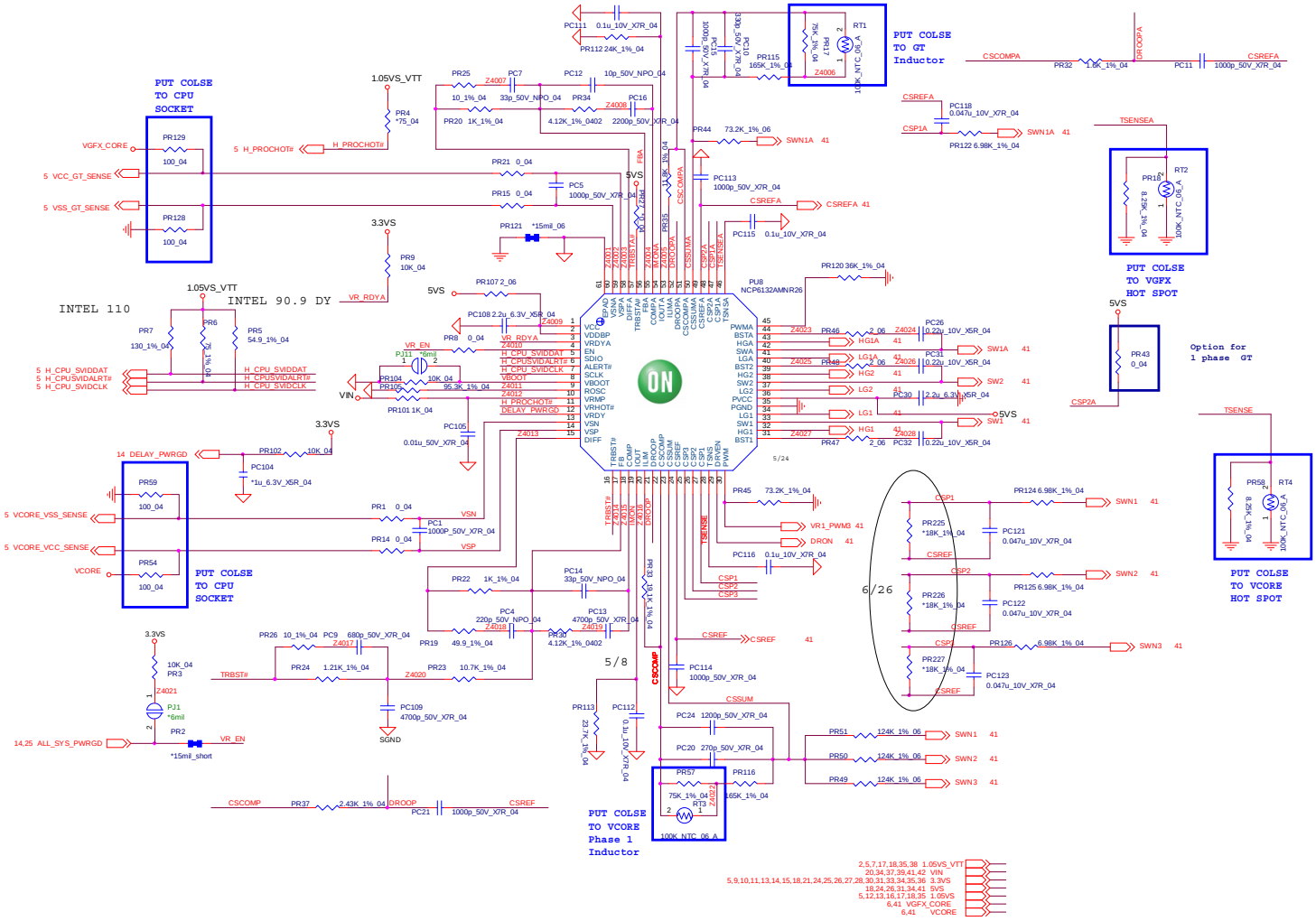

Sheet 40 of 45
Power VCORE1

Power VCORE2

Sheet 41 of 45
Power VCORE2

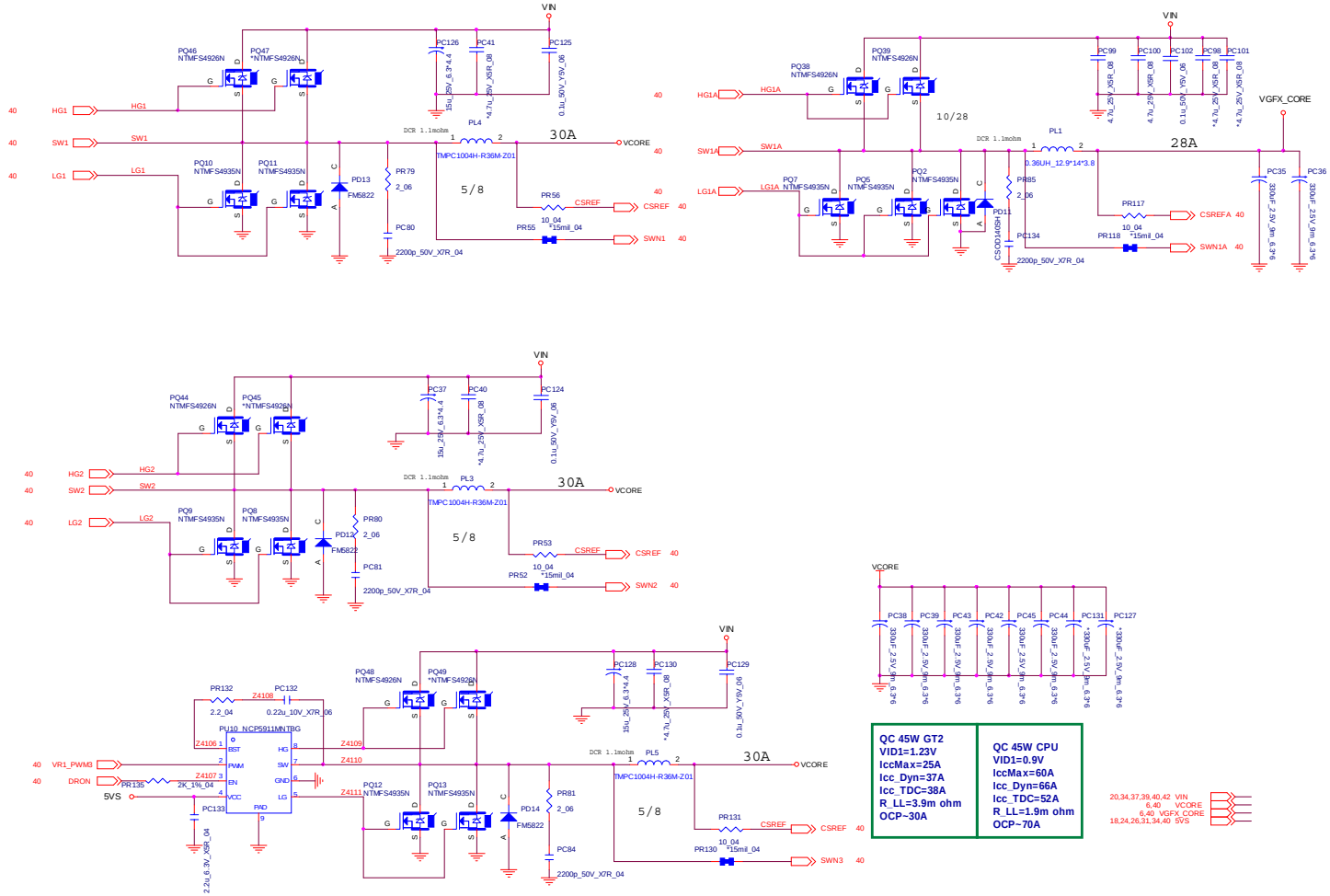

AC-In, Charger

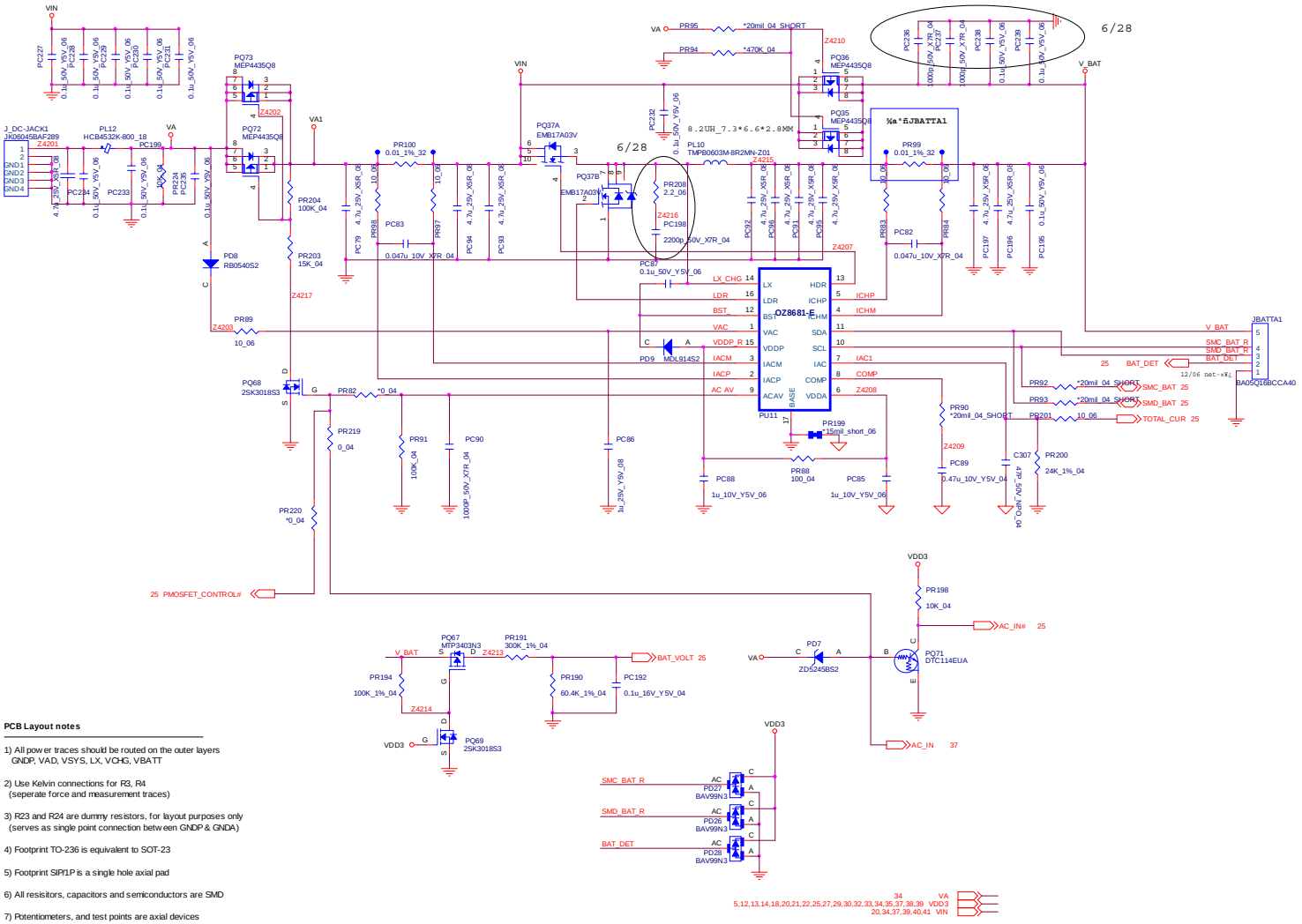

PCB Layout notes

1) All power traces should be routed on the outer layers GNDP, VAD, VSYS, LX, VCHG, VBATT

2) Use Kelvin connections for R3, R4 (seperate force and measurement traces)

3) R23 and R24 are dummy resistors, for layout purposes only (serves as single point connection between GNDP & GNDA)

4) Footprint TO-236 is equivalent to SOT-23

5) Footprint SIP/1P is a single hole axial pad

6) All resisitors, capacitors and semiconductors are SMD

7) Potentiometers, and test points are axial devices

Sheet 42 of 45
Ac-In, Charger

Audio/USB Board

Sheet 43 of 45
Audio/USB Board

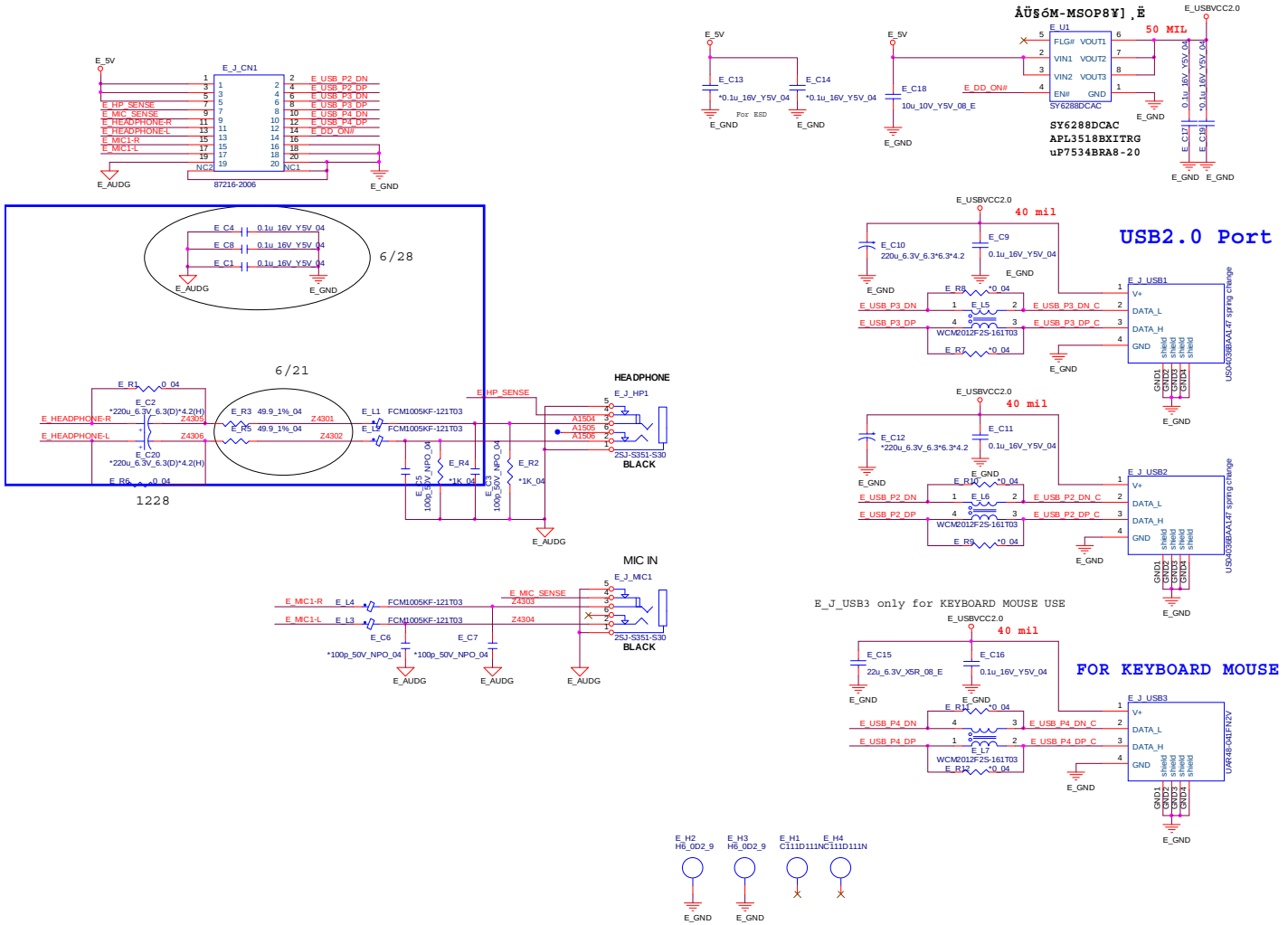

Power SW LED CIR Board

POWER BOARD

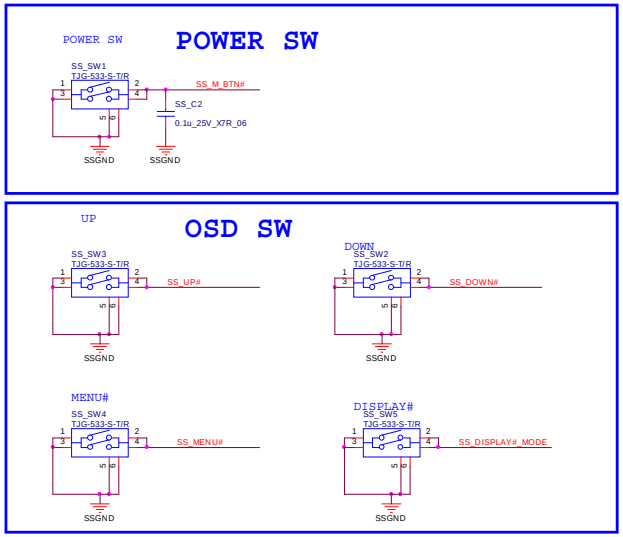

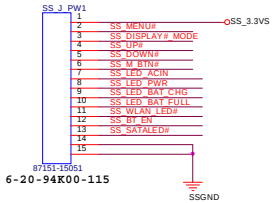

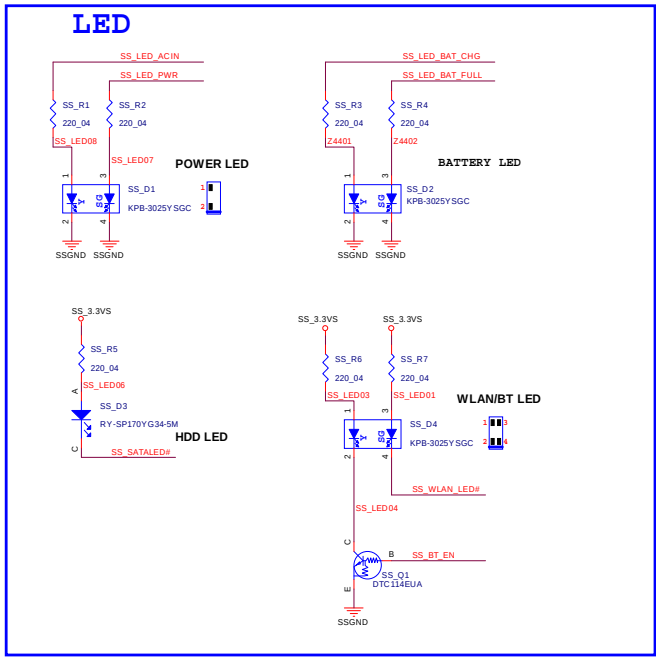

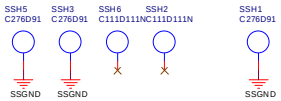

Sheet 44 of 45
Power SW LED CIR Board

Power Sequence

Sheet 45 of 45
Power Sequence

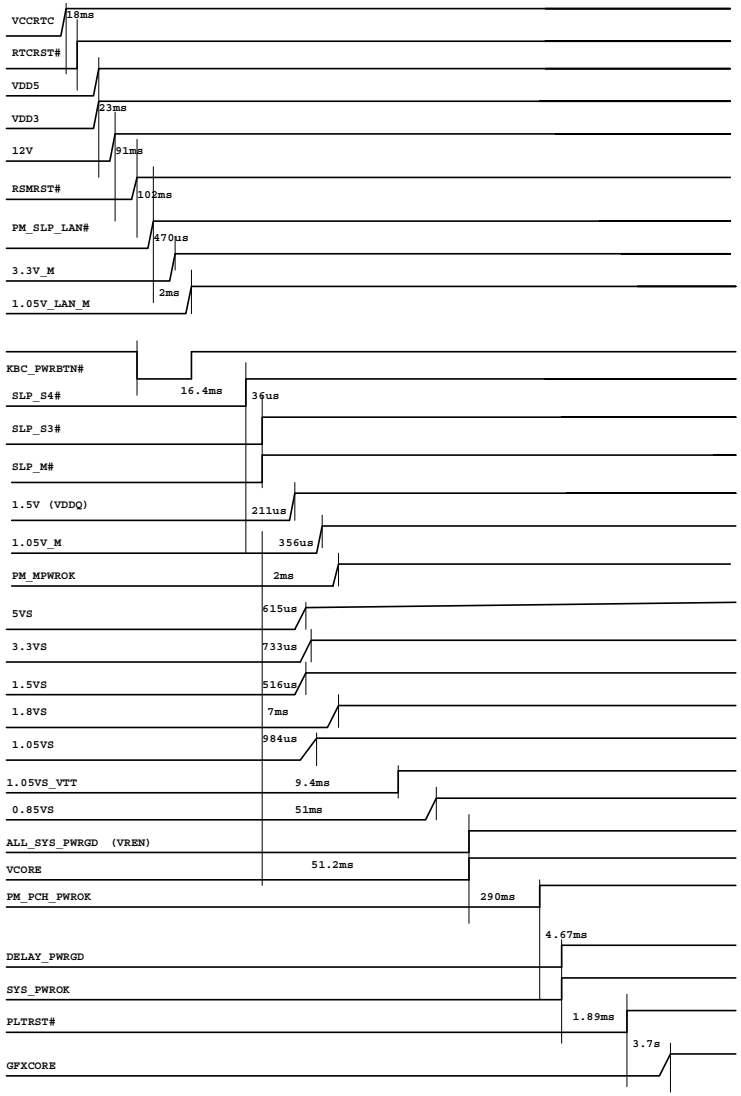

Appendix C: Wall Mounting Guide

The computer may be mounted on a wall for display, however in order to avoid personal injury or damage to the computer make note of the standards, warnings and precautions listed in this chapter:

The system meets VESA (FDMI) Standard (**100mm * 100mm**), however before attaching any display bracket it is necessary to remove the stand.

Removing the Stand

1. Turn **off** the computer and disconnect all cables and peripherals.
2. Carefully place the computer flat with the LCD facing down (make sure you cover the LCD to avoid scratches) so that you may access the rear cover.
3. Push at point A to release the stand cover in the direction of the arrow B (***Figure 1a***).
4. Lift the stand cover C off the computer and remove screws D - K from the stand (***Figure 1b***).
5. Remove the stand L (***Figure 1b***).

Figure 1
Stand Removal

a. Push to release the stand cover.
b. Remove the screws
c. Remove the stand.

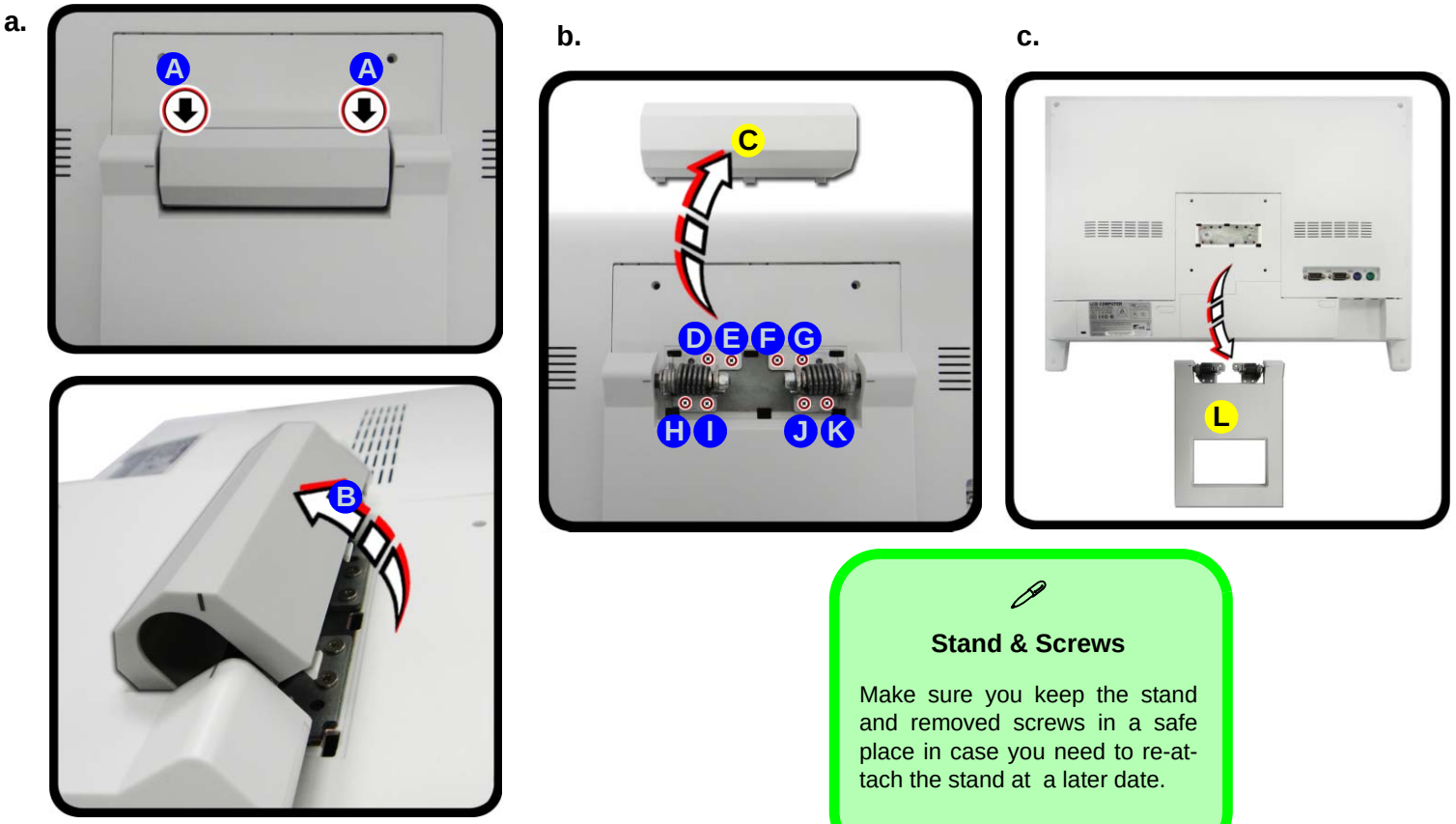

C. Stand Cover
L. Stand

- 8 Screws

Stand & Screws

Make sure you keep the stand and removed screws in a safe place in case you need to re-attach the stand at a later date.

Mounting Systems

This computer complies to the VESA FDMI (Flat Display Mounting Interface) 100mm * 100mm standard. Make sure that any mounting system you want to use meets the same standard.

It is imperative that you consult appropriate professional installers (i.e. qualified engineering, construction or architectural personnel) to install, move or service any mounting system. This is especially so as vertical surfaces vary widely and thus the actual mounting of any screen is beyond the scope of what can be outlined in written manual form. Some surfaces require significant reinforcement before any mount and display can function safely. Professional installers can determine if any vertical surface can bear the weight of the whole system.

Warning

If non-qualified installers are used to install any mounting system the system may fall and cause a serious injury if:

- The wall bracket does not support the weight of the system.
- The wall bracket is not securely (or is unevenly) fastened to the wall.
- The wall itself is not sturdy enough to support the system.
- An earthquake occurs.

General Guidelines for Wall Mounting

- Only use professional installers to install, move or service any mounting system.
- The system must only be mounted on a wall which can support the whole system's weight (including the weight of any arm or bracket).
- Make sure any wall is perpendicular and flat.
- Any mounting system used must support a minimum of **30kg** weight and be VESA compliant.
- Only use the screws and fittings supplied with the mounting system.
- Only use **M4 screws of a length of 12mm** to attach any bracket to the computer.
- Drill any holes to a depth of **30mm** (minimum), and only use the screws supplied with any bracket to attach it to the wall.
- Bear in mind that sufficient space must be left between the rear of the computer and the wall in order to allow:

  access to the ports & jacks
  the screen to be tilted (if the mounting system supports this)
  ventilation space

- It usually requires two people to mount the display on the wall (i.e. when joining the display bracket to the wall bracket).
- Make sure that any cables are firmly secured and do not cause an obstruction.
- Do not make any alterations or adjustments to any wall bracket yourself.
- Do not hang anything from (or add any other items to) the system.
- Do not expose the system to moisture or liquid.
- Do not mount the system in a location where it may excessively protrude or cause an obstruction.
- Do not mount the system too close to an air conditioning unit.
- Take care, and do not lean your weight on the system when cleaning it.
- Keep flammable objects and/or open flames away from the mounted system.
- Do not spill or spray liquid on the system.

Mounted System Example

The following pictures show some examples of how a system can be mounted on to a wall. These pictures are intended for guideline purposes only, and are not specific instructions. Professional installers will determine the exact installation procedure for your specific bracket and mounting conditions.

Installation Example

1. After removing the stand, the display bracket (which must to be VESA 100mm * 100mm compliant - weight rating of 30kg minimum) is attached firmly to the rear of the computer using **M4 screws** (of a length of 12mm) provided with the bracket.

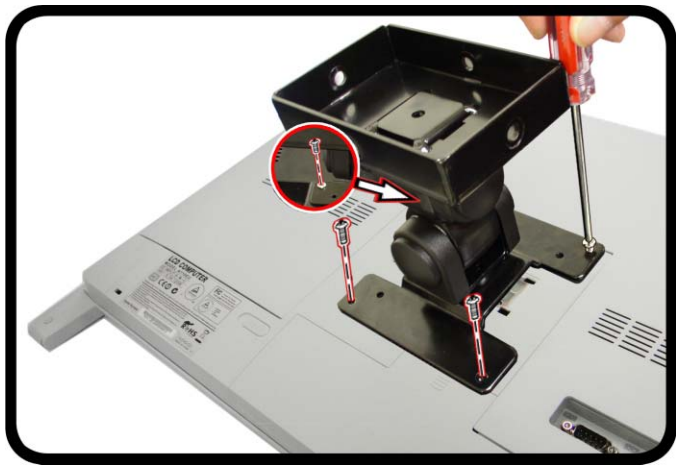

Figure 2
Display Bracket Attached

2. The (VESA compliant) wall bracket can then be attached to the wall using the screws provided with the system (holes in the flat, perpendicular wall should be drilled to a minimum depth of 30mm).

Figure 3
Wall Bracket

3. The display can now be mounted by lowering the display bracket (**in this example**) over the wall bracket and attaching the screws. Note that this procedure usually requires **two people**, as one person will need to hold the computer while the other inserts and tightens the screws.

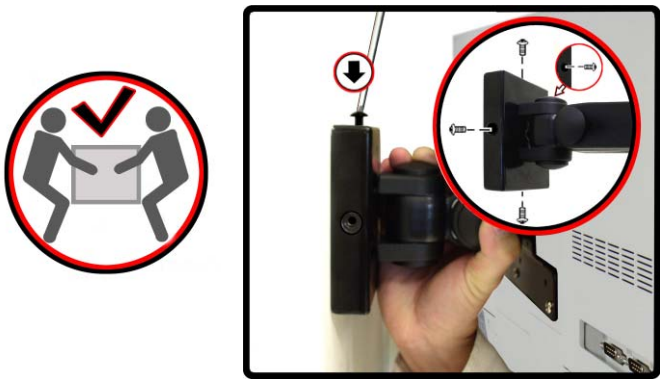

Figure 4
Mounting the Display

4. The cables may now be attached, and firmly secured, to the system's ports and jacks.

Figure 5
Wall Bracket

Rotation

Once mounted the screen may be rotated through 180 degrees up/down and left/right, and through 270 degrees clockwise/ counterclockwise.

Appendix D:Updating the FLASH ROM BIOS

To update the FLASH ROM BIOS, you must:

- Download the BIOS update from the web site.
- Unzip the files onto a bootable CD/DVD/USB Flash Drive.
- Reboot your computer from an external CD/DVD/USB Flash Drive.
- Use the flash tools to update the flash BIOS using the commands indicated below.
- Restart the computer booting from the HDD and press **F2** at startup enter the BIOS.
- Load setup defaults from the BIOS and save the default settings and exit the BIOS to restart the computer.
- After rebooting the computer you may restart the computer again and make any required changes to the default BIOS settings.

Download the BIOS

1. Go to **www.clevo.com.tw** and point to **E-Services** and click **E-Channel**.
2. Use your user ID and password to access the appropriate download area (BIOS), and download the latest BIOS files (the BIOS file will be contained in a batch file that may be run directly once unzipped) for your computer model (**see sidebar for important information on BIOS versions**).

Unzip the downloaded files to a bootable CD/DVD/ or USB Flash drive

1. Insert a bootable CD/DVD/USB flash drive into the CD/DVD drive/USB port of the computer containing the downloaded files.
2. Use a tool such as Winzip or Winrar to unzip all the BIOS files and refresh tools to your bootable CD/DVD/USB flash drive (you may need to create a bootable CD/DVD with the files using a 3rd party software).

Set the computer to boot from the external drive

1. With the bootable CD/DVD/USB flash drive containing the BIOS files in your CD/DVD drive/USB port, restart the computer and press **F2** (in most cases) to enter the BIOS.
2. Use the arrow keys to highlight the **Boot** menu.
3. Use the "+" and "-" keys to move boot devices up and down the priority order.
4. Make sure that the CD/DVD drive/USB flash drive is set first in the boot priority of the BIOS.

BIOS Version

Make sure you download the latest correct version of the BIOS appropriate for the computer model you are working on.

You should only download BIOS versions that are V1.01.XX or higher as appropriate for your computer model.

Note that BIOS versions are not backward compatible and therefore **you may not downgrade your BIOS to an older version** after upgrading to a later version (e.g if you upgrade a BIOS to ver 1.01.05, you **MAY NOT** then go back and flash the BIOS to ver 1.01.04).

5. Press **F10** to save any changes you have made and exit the BIOS to restart the computer.

Use the flash tools to update the BIOS

1. Make sure you are not loading any memory management programs such as HIMEM by holding the **F8** key as you see the message "**Starting MS-DOS**". You will then be prompted to give "**Y**" or "**N**" responses to the programs being loaded by DOS. Choose "N" for any memory management programs.
2. You should now be at the DOS prompt e.g: DISK **C**:\> (C is the designated drive letter for the CD/DVD drive/USB flash drive).
3. **Type the following command** at the DOS prompt:

   C:\> XXX.bat

4. The utility will then proceed to flash the BIOS.
5. You should then be prompted to press any key to restart the system or turn the power off, and then on again but make sure you remove the CD/DVD/USB flash drive from the CD/DVD drive/USB port before the computer restarts.

Restart the computer (booting from the HDD)

1. With the CD/DVD/USB flash drive removed from the CD/DVD drive/USB port the computer should restart from the HDD.
2. Press **F2** as the computer restarts to enter the BIOS.
3. Use the arrow keys to highlight the **Exit** menu.
4. Select **Load Setup Defaults** (or press **F9**) and select "**Yes**" to confirm the selection.
5. Press **F10** to save any changes you have made and exit the BIOS to restart the computer.

Your computer is now running normally with the updated BIOS

You may now enter the BIOS and make any changes you require to the default settings.