SERVICE MANUAL

M980NU

Notebook Computer

M980NU

Service Manual

Notice

The company reserves the right to revise this publication or to change its contents without notice. Information contained herein is for reference only and does not constitute a commitment on the part of the manufacturer or any subsequent vendor. They assume no responsibility or liability for any errors or inaccuracies that may appear in this publication nor are they in anyway responsible for any loss or damage resulting from the use (or misuse) of this publication.

Version 1.0
September 2009

Trademarks

Intel and **Intel Core** are trademarks of Intel Corporation.
Windows® is a registered trademark of Microsoft Corporation.
Other brand and product names are trademarks and/or registered trademarks of their respective companies.

About this Manual

This manual is intended for service personnel who have completed sufficient training to undertake the maintenance and inspection of personal computers.

It is organized to allow you to look up basic information for servicing and/or upgrading components of the ***M980NU*** series notebook PC.

The following information is included:

Chapter 1, Introduction, provides general information about the location of system elements and their specifications.
Chapter 2, Disassembly, provides step-by-step instructions for disassembling parts and subsystems and how to upgrade elements of the system.

Appendix A, Part Lists
Appendix B, Schematic Diagrams

IMPORTANT SAFETY INSTRUCTIONS

Follow basic safety precautions, including those listed below, to reduce the risk of fire, electric shock and injury to persons when using any electrical equipment:

1. Do not use this product near water, for example near a bath tub, wash bowl, kitchen sink or laundry tub, in a wet basement or near a swimming pool.
2. Avoid using a telephone (other than a cordless type) during an electrical storm. There may be a remote risk of electrical shock from lightning.
3. Do not use the telephone to report a gas leak in the vicinity of the leak.
4. Use only the power cord and batteries indicated in this manual. Do not dispose of batteries in a fire. They may explode. Check with local codes for possible special disposal instructions.
5. This product is intended to be supplied by a Listed Power Unit (Full Range AC/DC Adapter – AC Input 100 - 240V, 50 - 60Hz, DC Output 19V, 11.6A or 19V, 11.57A/12.2A).

This Computer's Optical Device is a Laser Class 1 Product

Instructions for Care and Operation

The notebook computer is quite rugged, but it can be damaged. To prevent this, follow these suggestions:

1. **Don't drop it, or expose it to shock.** If the computer falls, the case and the components could be damaged.

Do not expose the computer to any shock or vibration. 	*Do not place it on an unstable surface.* 	*Do not place anything heavy on the computer.* 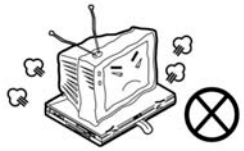

2. **Keep it dry, and don't overheat it.** Keep the computer and power supply away from any kind of heating element. This is an electrical appliance. If water or any other liquid gets into it, the computer could be badly damaged.

Do not expose it to excessive heat or direct sunlight. 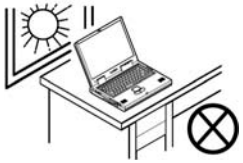	*Do not leave it in a place where foreign matter or moisture may affect the system.* 	*Don't use or store the computer in a humid environment.* 	*Do not place the computer on any surface which will block the vents.* 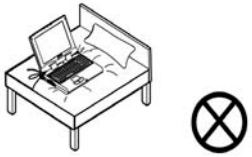

3. **Follow the proper working procedures for the computer**. Shut the computer down properly and don't forget to save your work. Remember to periodically save your data as data may be lost if the battery is depleted.

Do not turn off the power until you properly shut down all programs. 	*Do not turn off any peripheral devices when the computer is on.* 	*Do not disassemble the computer by yourself.* 	*Perform routine maintenance on your computer.* 

4. **Avoid interference.** Keep the computer away from high capacity transformers, electric motors, and other strong magnetic fields. These can hinder proper performance and damage your data.
5. **Take care when using peripheral devices**.

Use only approved brands of peripherals. 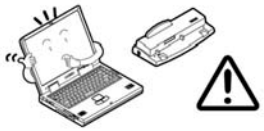	*Unplug the power cord before attaching peripheral devices.* 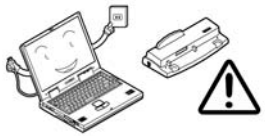

Power Safety

The computer has specific power requirements:

- Only use a power adapter approved for use with this computer.
- Your AC adapter may be designed for international travel but it still requires a steady, uninterrupted power supply. If you are unsure of your local power specifications, consult your service representative or local power company.
- The power adapter may have either a 2-prong or a 3-prong grounded plug. The third prong is an important safety feature; do not defeat its purpose. If you do not have access to a compatible outlet, have a qualified electrician install one.
- When you want to unplug the power cord, be sure to disconnect it by the plug head, not by its wire.
- Make sure the socket and any extension cord(s) you use can support the total current load of all the connected devices.
- Before cleaning the computer, make sure it is disconnected from any external power supplies.

Power Safety Warning

Before you undertake any upgrade procedures, make sure that you have turned off the power, and disconnected all peripherals and cables (including telephone lines). It is advisable to also remove your battery in order to prevent accidentally turning the machine on.

Do not plug in the power cord if you are wet. 	*Do not use the power cord if it is broken.* 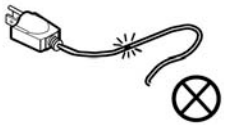	*Do not place heavy objects on the power cord.* 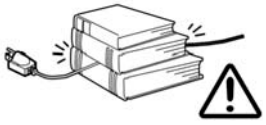

Battery Precautions

- Only use batteries designed for this computer. The wrong battery type may explode, leak or damage the computer.
- Do not continue to use a battery that has been dropped, or that appears damaged (e.g. bent or twisted) in any way. Even if the computer continues to work with a damaged battery in place, it may cause circuit damage, which may possibly result in fire.
- Recharge the batteries using the notebook's system. Incorrect recharging may make the battery explode.
- Do not try to repair a battery pack. Refer any battery pack repair or replacement to your service representative or qualified service personnel.
- Keep children away from, and promptly dispose of a damaged battery. Always dispose of batteries carefully. Batteries may explode or leak if exposed to fire, or improperly handled or discarded.
- Keep the battery away from metal appliances.
- Affix tape to the battery contacts before disposing of the battery.
- Do not touch the battery contacts with your hands or metal objects.

Battery Guidelines

The following can also apply to any backup batteries you may have.

- If you do not use the battery for an extended period, then remove the battery from the computer for storage.
- Before removing the battery for storage charge it to 60% - 70%.
- Check stored batteries at least every 3 months and charge them to 60% - 70%.

Battery Disposal

The product that you have purchased contains a rechargeable battery. The battery is recyclable. At the end of its useful life, under various state and local laws, it may be illegal to dispose of this battery into the municipal waste stream. Check with your local solid waste officials for details in your area for recycling options or proper disposal.

Caution

Danger of explosion if battery is incorrectly replaced. Replace only with the same or equivalent type recommended by the manufacturer. Discard used battery according to the manufacturer's instructions.

Battery Level

Click the battery icon in the taskbar to see the current battery level and charge status. A battery that drops below a level of 10% will not allow the computer to boot up. Make sure that any battery that drops below 10% is recharged within one week.

Related Documents

You may also need to consult the following manual for additional information:

User's Manual on CD
This describes the notebook PC's features and the procedures for operating the computer and its ROM-based setup program. It also describes the installation and operation of the utility programs provided with the notebook PC.

Contents

Chapter 1: Introduction

Overview

This manual covers the information you need to service or upgrade the ***M980NU*** series notebook computer. Information about operating the computer (e.g. getting started, and the *Setup* utility) is in the *User's Manual*. Information about drivers (e.g. VGA & audio) is also found in *User's Manual*. That manual is shipped with the computer.

Operating systems (e.g. *Windows XP*, *Windows Vista*, *Windows 7*, etc.) have their own manuals as do application software (e.g. word processing and database programs). If you have questions about those programs, you should consult those manuals.

The ***M980NU*** series notebook is designed to be upgradeable. See ***Disassembly on page 2 - 1*** for a detailed description of the upgrade procedures for each specific component. Please note the warning and safety information indicated by the "🔔" symbol.

The balance of this chapter reviews the computer's technical specifications and features.

System Specifications

Processor
Intel® Core™ 2 Quad Processor - (478-pin) Micro-FC-PGA Package, 45nm (45 Nanometer) Process Technology: **QX9300** - **2.53 GHz**, 12MB On-die L2 Cache & 1066MHz FSB (45W) **X9100** - **3.06 GHz,** 6MB On-die L2 Cache & 1066MHz FSB (44W) **Q9000** - **2.0 GHz,** 6MB On-die L2 Cache & 1066MHz FSB (45W) **Q9100** - **2.26 GHz,** 12MB On-die L2 Cache & 1066MHz FSB (45W) **Intel® Core™ 2 Duo Processor** - (478-pin) Micro-FC-PGA Package, 45nm (45 Nanometer) Process Technology: **T9400** - **2.53 GHz**, 6MB On-die L2 Cache & 1066MHz FSB (35W) **T9600** - **2.80 GHz**, 6MB On-die L2 Cache & 1066MHz FSB (35W) **T9800** - **2.93 GHz**, 6MB On-die L2 Cache & 1066MHz FSB (35W) **T9900** - **3.06 GHz**, 6MB On-die L2 Cache & 1066MHz FSB (35W) **P9500** - **2.53 GHz**, 6MB On-die L2 Cache & 1066MHz FSB (25W) **P9600** - **2.66 GHz**, 6MB On-die L2 Cache & 1066MHz FSB (25W) **P8600** - **2.4 GHz**, 3MB On-die L2 Cache & 1066MHz FSB (25W) **P8700** - **2.53 GHz**, 3MB On-die L2 Cache & 1066MHz FSB (25W)
Core Logic
MCP79 SLI Chipset

Display
18.4" Full HD (1920 * 1080) TFT LCD
Memory
Two 64-bit wide **DDRIII (DDR3)** data channels Two 204 Pin SO-DIMM Sockets Supporting **DDRIII (DDR3)** 1066MHz/1333MHz Memory Modules Memory Expandable up to *GB
Video Adapter Options
nVIDIA® GeForce GTX 280M SLI PCIe Video Card 1GB GDDR3 Video RAM On Board Supports PCIe * 8 (SLI - 2 * PCIe * 8) Supports Microsoft DirectX® 10.0 Supports HDCP nVIDIA® GeForce GTX 260M SLI PCIe Video Card 1GB GDDR3 Video RAM On Board Supports PCIe * 8 (SLI - 2 * PCIe * 8) Supports Microsoft DirectX® 10.0 Supports HDCP
BIOS
One 8Mb Flash ROM Phoenix™ BIOS
Storage
Up to three (**Option**) Changeable 2.5" 9.5 mm (h) **SATA** (Serial) Hard Disk Drives supporting RAID level 0/1 One 12.7 mm Super Multi/Blu-Ray Combo/ Writer SATA Optical Device Drive (**Option**)

Keyboard & Pointing Device
Full Size Winkey Keyboard with Numeric Keypad Built-In TouchPad (Scroll Functionality Included) Eight Touch Sensor Instant Keys (Color, CCD, Bluetooth, WLAN, Internet, Silent Mode, Sound Effect, Mute) Eight Gaming Keys G1 ~ G8
Card Reader
Embedded 7-in-1 Card Reader (MS/ MS Pro/ SD/ Mini SD/ MMC/ RS MMC/ MS Duo) **Note:** MS Duo/ Mini SD/ RS MMC Cards require a PC adapter
Interface
Four USB 2.0 Ports One eSATA Port One DVI-Out Port (with CRT out) One HDMI (High-Definition Multimedia Interface) Port with Audio Output (with HDCP Support) One Headphone/Speaker-Out Jack One Microphone-In Jack One Line-In Jack One S/PDIF Out Jack One RJ-45 LAN Jack One Mini-IEEE1394a Port One DC-In Jack One Consumer Infrared Port for TV Tuner Remote Controller CATV Jack (for TV Tuner)

Slots
One ExpressCard/34/54 Slot Two Mini Card Slots: **Slot 1** for PCIe WLAN Module **Slot 2** for USB TV Tuner Module
Audio
High Definition Audio3D Stereo Enhanced Sound System S/PDIF Digital Output Built-In Microphone 5 * Built-In Speakers (2W/ 1.5W, 4Ω) One Sub Woofer (2W, 4Ω,) Dolby Surround Supported
Security
Security (Kensington® Type) Lock Slot BIOS Password Fingerprint Reader Module (**Factory Option**) Trusted Platform Module V1.2 (**Factory Option**)

External Locator - Top View with LCD Panel Open

Figure 1
Top View

1. Optional Built-In PC Camera
2. LCD
3. LED Status Indicators
4. Touch Sensor Instant Keys
5. 8 * Gaming Keys
6. Keyboard
7. TouchPad and Buttons
8. Fingerprint Reader Module (**optional**)
9. LED Power Indicators

External Locator - Front & Right side Views

Figure 2
Front Views

1. Color LEDs
2. Speakers
3. LED Power Indicators
4. Consumer Infrared Transceiver (enabled with optional TV Tuner only)

Figure 3
Right Side Views

5. Headphone-In Jack
6. Microphone-In Jack
7. Line-In Jack
8. S/PDIF-Out Jack
9. Cable (CATV) Antenna Jack*
10. Combined eSATA/USB Port
11. USB 2.0 Port
12. Security Lock Slot
13. Power Button

External Locator - Left Side & Rear View

Figure 4
Left Side View

1. DVI-Out Port
2. 2 * USB 2.0 Ports
3. RJ-45 LAN Jack
4. HDMI-Out Port
5. 7-in-1 Card Reader
6. ExpressCard Slot
7. Mini-IEEE 1394 Port
8. Optional Device Drive Bay

Figure 5
Rear View

9. Color LEDs
10. Speakers
11. DC-In Jack

External Locator - Bottom View

Figure 6
Bottom View

1. Sub Woofer
2. Fan Outlet/Intake
3. Component Bay Cover
4. Battery (Secondary HDD Bay - HDD3)
5. Primary HDD Bay (HDD1 & 2)

Overheating

To prevent your computer from overheating make sure nothing blocks the vent/fan intakes while the computer is in use.

Mainboard Overview - Top (Key Parts)

Figure 7
Mainboard Top Key Parts

1. North Bridge
2. Memory Slots DDR3 So-DIMM
3. Mini-Card Connector (WLAN Module)

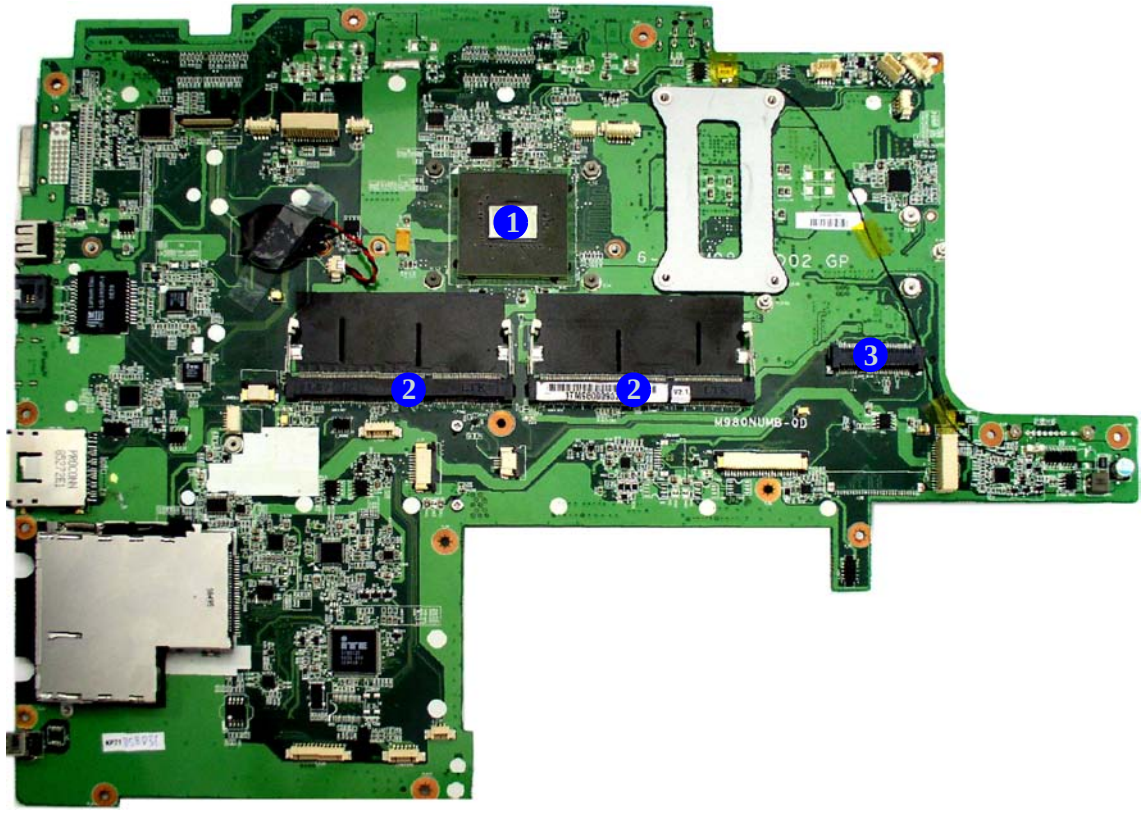

Mainboard Overview - Bottom (Key Parts)

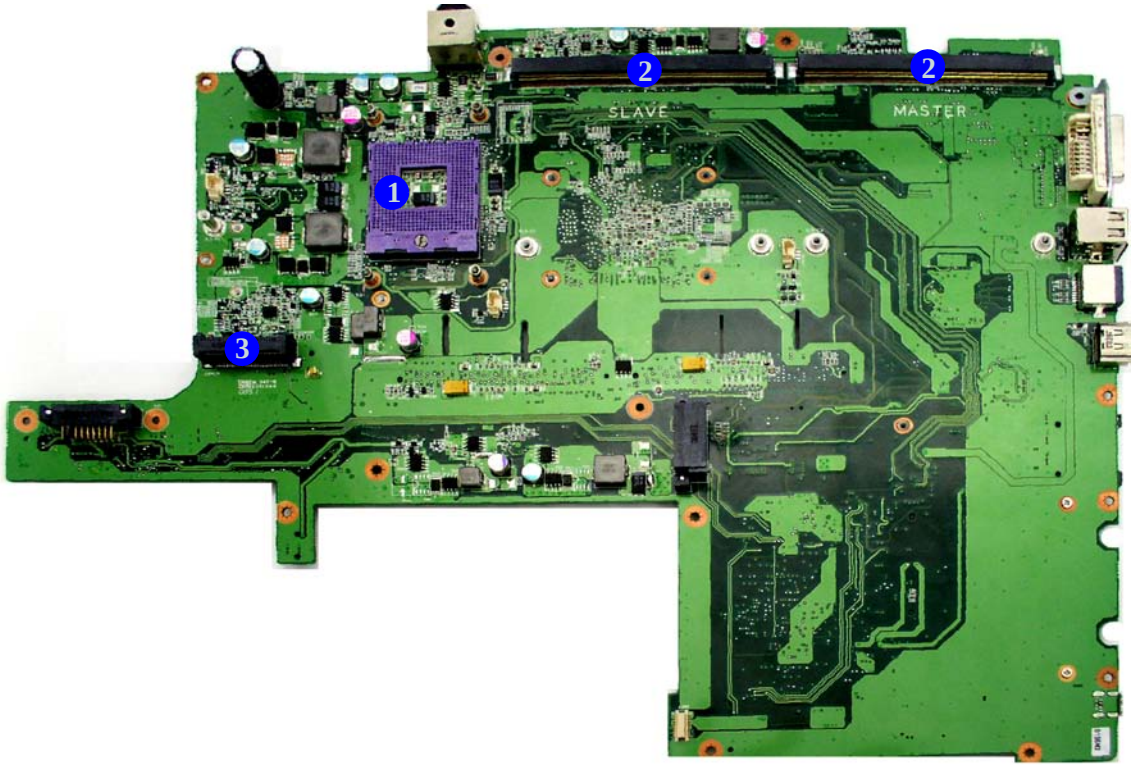

Figure 8
Mainboard Bottom Key Parts

1. CPU Socket
2. VGA Socket
3. Mini-Card Connector (TV Module)

Mainboard Overview - Top (Connectors)

Figure 9
Mainboard Top Connectors

1. CCD Cable Connector
2. LCD Cable Connector
3. Side L Cable Connector
4. Inverter Cable Connector
5. LED Cable Connector
6. Subwoofer Connector
7. Power Button Connector
8. Game-Key Cable Connector
9. Bluetooth Module Connector
10. LED Cable Connector
11. Touch Pad Connector
12. USB Cable Connector
13. Audio Cable Connector
14. SW Connector
15. Fingerprint Connector
16. Keyboard Cable Connector
17. Audio Cable Connector

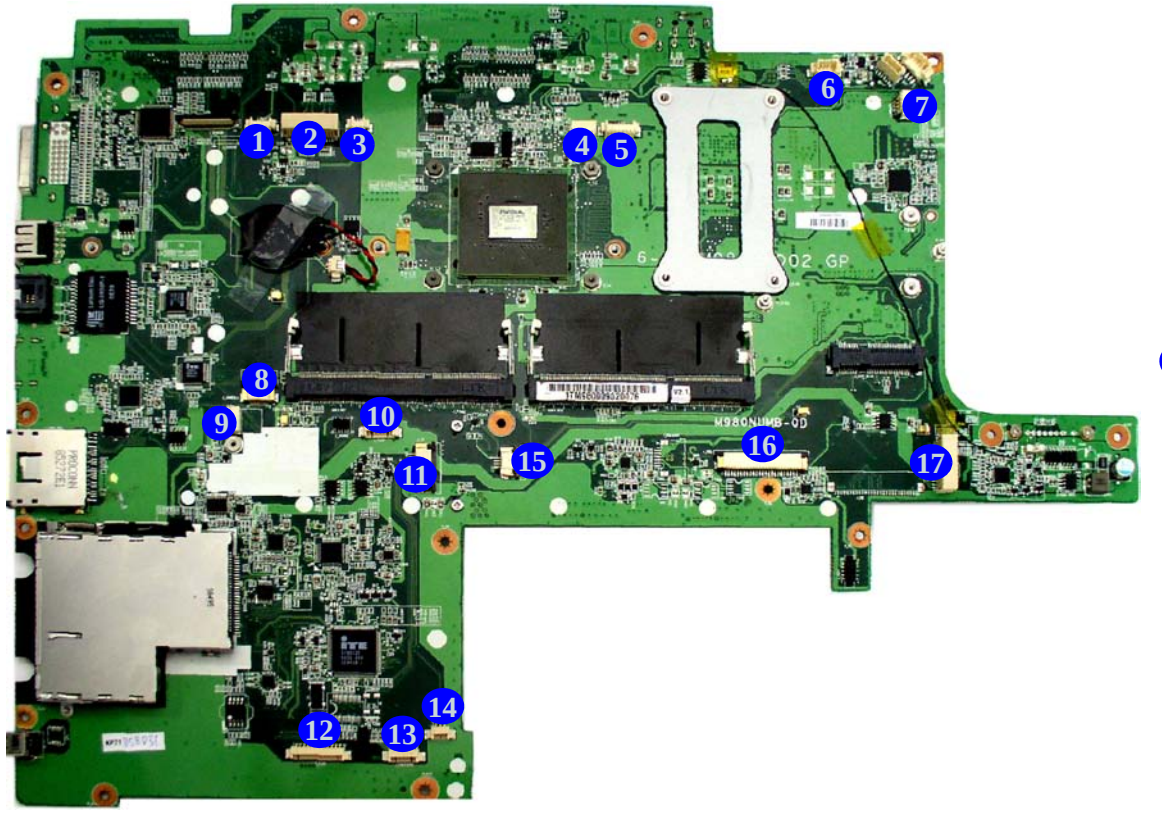

Mainboard Overview - Bottom (Connectors)

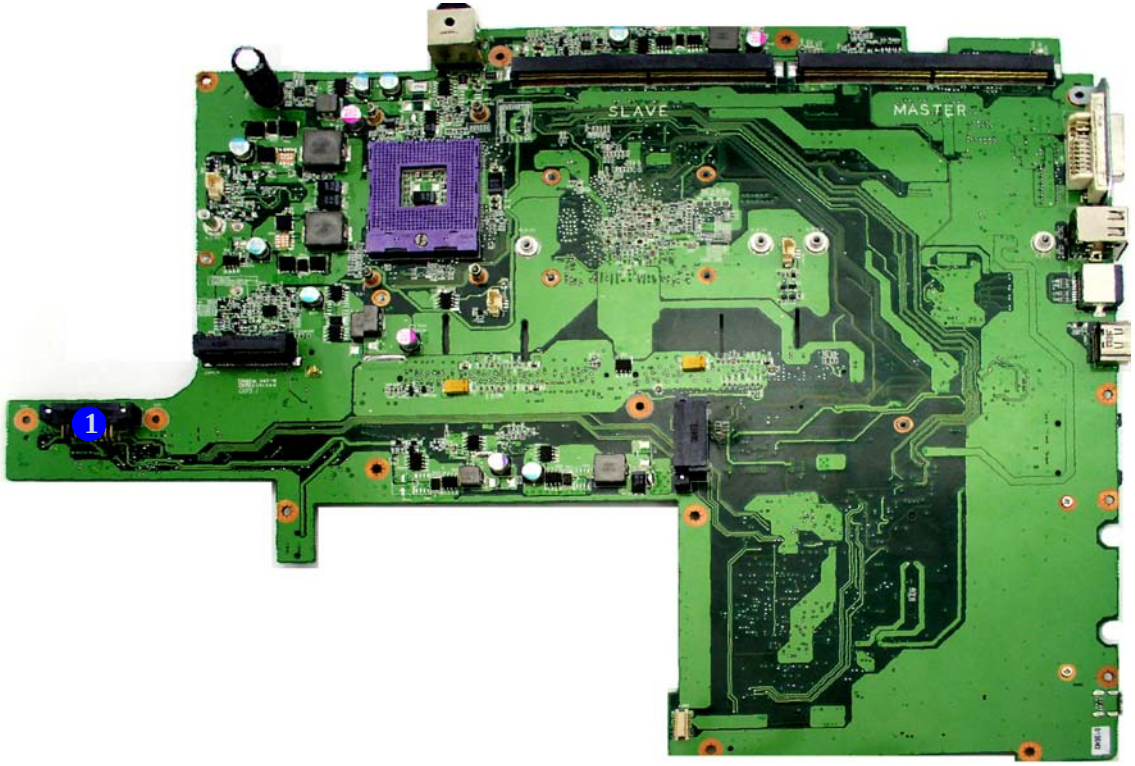

Figure 10
Mainboard Bottom Connectors

1. Battery Connector

Chapter 2: Disassembly

Overview

This chapter provides step-by-step instructions for disassembling the ***M980NU*** series notebook's parts and subsystems. When it comes to reassembly, reverse the procedures (unless otherwise indicated).

We suggest you completely review any procedure before you take the computer apart.

Procedures such as upgrading/replacing the RAM, optical device and hard disk are included in the User's Manual but are repeated here for your convenience.

To make the disassembly process easier each section may have a box in the page margin. Information contained under the figure # will give a synopsis of the sequence of procedures involved in the disassembly procedure. A box with a lists the relevant parts you will have after the disassembly process is complete. **Note**: The parts listed will be for the disassembly procedure listed ONLY, and not any previous disassembly step(s) required. Refer to the part list for the previous disassembly procedure. The amount of screws you should be left with will be listed here also.

A box with a will also provide any possible helpful information. A box with a contains warnings.

An example of these types of boxes are shown in the sidebar.

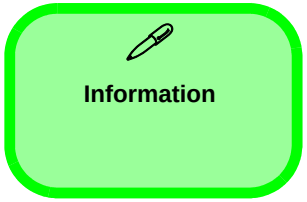

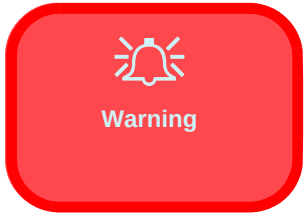

NOTE: All disassembly procedures assume that the system is turned **OFF**, and disconnected from any power supply (the battery is removed too).

Maintenance Tools

The following tools are recommended when working on the notebook PC:

- M3 Philips-head screwdriver
- M2.5 Philips-head screwdriver (magnetized)
- M2 Philips-head screwdriver
- Small flat-head screwdriver
- Pair of needle-nose pliers
- Anti-static wrist-strap

Connections

Connections within the computer are one of four types:

Locking collar sockets for ribbon connectors	To release these connectors, use a small flat-head screwdriver to gently pry the locking collar away from its base. When replacing the connection, make sure the connector is oriented in the same way. The pin1 side is usually not indicated.
Pressure sockets for multi-wire connectors	To release this connector type, grasp it at its head and gently rock it from side to side as you pull it out. Do not pull on the wires themselves. When replacing the connection, do not try to force it. The socket only fits one way.
Pressure sockets for ribbon connectors	To release these connectors, use a small pair of needle-nose pliers to gently lift the connector away from its socket. When replacing the connection, make sure the connector is oriented in the same way. The pin1 side is usually not indicated.
Board-to-board or multi-pin sockets	To separate the boards, gently rock them from side to side as you pull them apart. If the connection is very tight, use a small flat-head screwdriver - use just enough force to start.

Maintenance Precautions

The following precautions are a reminder. To avoid personal injury or damage to the computer while performing a removal and/or replacement job, take the following precautions:

1. **Don't drop it**. Perform your repairs and/or upgrades on a stable surface. If the computer falls, the case and other components could be damaged.
2. **Don't overheat it**. Note the proximity of any heating elements. Keep the computer out of direct sunlight.
3. **Avoid interference**. Note the proximity of any high capacity transformers, electric motors, and other strong magnetic fields. These can hinder proper performance and damage components and/or data. You should also monitor the position of magnetized tools (i.e. screwdrivers).
4. **Keep it dry**. This is an electrical appliance. If water or any other liquid gets into it, the computer could be badly damaged.
5. **Be careful with power**. Avoid accidental shocks, discharges or explosions.
   - Before removing or servicing any part from the computer, turn the computer off and detach any power supplies.
   - When you want to unplug the power cord or any cable/wire, be sure to disconnect it by the plug head. Do not pull on the wire.
6. **Peripherals** – Turn off and detach any peripherals.
7. **Beware of static discharge**. ICs, such as the CPU and main support chips, are vulnerable to static electricity. Before handling any part in the computer, discharge any static electricity inside the computer. When handling a printed circuit board, do not use gloves or other materials which allow static electricity buildup. We suggest that you use an anti-static wrist strap instead.
8. **Beware of corrosion**. As you perform your job, avoid touching any connector leads. Even the cleanest hands produce oils which can attract corrosive elements.
9. **Keep your work environment clean**. Tobacco smoke, dust or other air-born particulate matter is often attracted to charged surfaces, reducing performance.
10. **Keep track of the components**. When removing or replacing any part, be careful not to leave small parts, such as screws, loose inside the computer.

Power Safety Warning

Before you undertake any upgrade procedures, make sure that you have turned off the power, and disconnected all peripherals and cables (including telephone lines). It is advisable to also remove your battery in order to prevent accidentally turning the machine on.

Cleaning

Do not apply cleaner directly to the computer, use a soft clean cloth.
Do not use volatile (petroleum distillates) or abrasive cleaners on any part of the computer.

Disassembly Steps

The following table lists the disassembly steps, and on which page to find the related information. **PLEASE PERFORM THE DISASSEMBLY STEPS IN THE ORDER INDICATED.**

To remove the Battery:

1. Remove the battery *page 2 - 5*

To remove the Optical Device:

1. Remove the battery *page 2 - 5*
2. Remove the Optical device *page 2 - 6*

To remove the HDD:

1. Remove the battery *page 2 - 5*
2. Remove the HDD *page 2 - 7*

To remove the System Memory:

1. Remove the battery *page 2 - 5*
2. Remove the System Memory *page 2 - 9*

To remove and install the Processor:

1. Remove the battery *page 2 - 5*
2. Remove the Processor *page 2 - 12*
3. Install the Processor *page 2 - 14*

To remove the VGA card:

1. Remove the battery *page 2 - 5*
2. Remove the VGA card *page 2 - 15*

To remove the Wireless LAN Module:

1. Remove the battery *page 2 - 5*
2. Remove the System Memory *page 2 - 9*
3. Remove the Wireless LAN *page 2 - 18*

To remove the Bluetooth Module:

1. Remove the battery *page 2 - 5*
2. Remove the System Memory *page 2 - 9*
3. Remove the Bluetooth *page 2 - 19*

To remove the TV Tuner Card:

1. Remove the battery *page 2 - 5*
2. Remove the TV tuner card *page 2 - 20*

Removing the Battery

If you are confident in undertaking upgrade procedures yourself, for safety reasons it is best to remove the battery.

1. Turn the computer off, and turn it over.
2. Loosen screws 1 - 3 and carefully lift the battery 4 up (***Figure b***) .
3. Remove the battery from the battery bay.

Figure 1
Battery Removal

a. Loosen screws.
b. Release the battery.
c. Lift the battery out of the bay as indicated.

a.

b.

c.

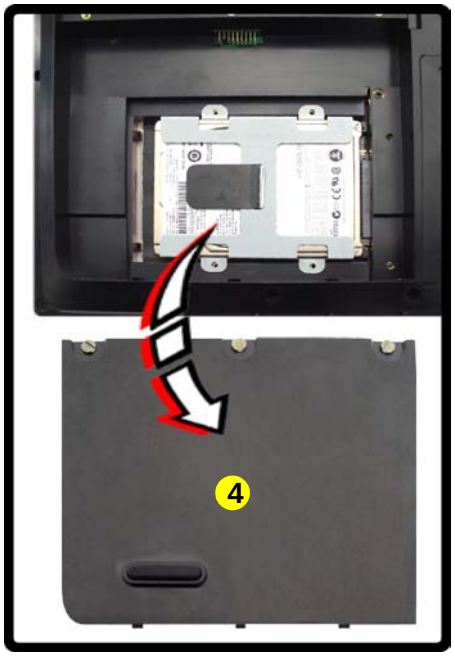

4. Battery

- 3 Screws

Figure 2
Optical Device Removal

a. Remove the screws.
b. Remove the cover.
c. Remove the screw and push the optical device out of the computer at point 5.

Removing the Optical (CD/DVD) Device

1. Turn off the computer, and turn it over and remove the battery (***page 2 - 5***).
2. Locate the hard disk bay cover and remove screws 1 & 2, and remove the bay cover 3.
3. Remove screw 4.
4. Use the screwdriver to push the optical device 6 out of the computer at point 5.
5. Reverse the process to install the new device.

a.

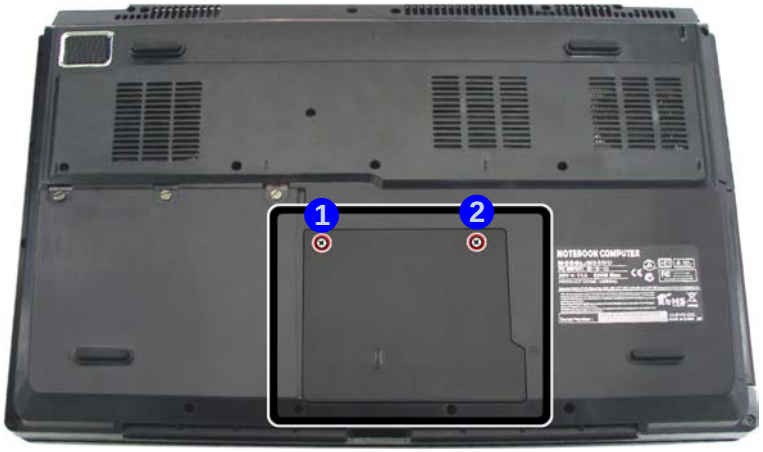

b.

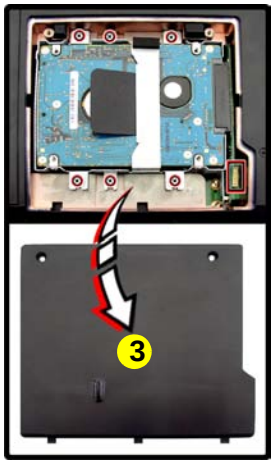

c.

3. Hard Disk Bay Cover
6. Optical Device

- 3 Screws

Blu-Ray Device Bezel Removal

Note that some Blu-Ray modules (e.g. Pioneer) have a small piece of mylar inserted in the left side (as viewed front on) of the bezel cover; in order to prevent the bezel cover of the module from being removed accidentally. If you need to replace the bezel cover, you will need to use a screwdriver to ease out and remove the mylar before attempting to remove the bezel cover. You will need to re-insert the mylar when replacing the bezel cover.

Removing the Hard Disk Drive

The hard disk drive is mounted in a removable case and can be taken out to accommodate other 2.5" SATA hard disk drives with a height of 9.5mm (h). Follow your operating system's installation instructions, and install all necessary drivers and utilities (as outlined in **Chapter 4 of the User's Manual**) when setting up a new hard disk.

Hard Disk Upgrade Process

1. Turn off the computer, and turn it over and remove the battery (*page 2 - 5*).
2. Locate the hard disk bay cover and remove screws 1 & 2.
3. Remove the bay cover 3.
4. Remove screws 4 - 9 and pull the tab to disconnect the connector 10 from hard disk assembly.
5. Lift the hard disk assembly 11 out of the computer.
6. Remove screws 12 - 21 (depending on how many hard disks you have installed in the assembly).
7. Separate the hard disk board connector 22 from the case 23 .
8. Separate the hard disk(s) 24 from the case.
9. Reverse the process to install a new hard disk(s).

Figure 3
HDD Assembly Removal

a. Remove the screws.
b. Remove the cover
c. Remove the screws and lift the hard disk assembly up out off the computer.
d. Remove the screws and separate the HDD(s) from the connector and case.

a.

b.

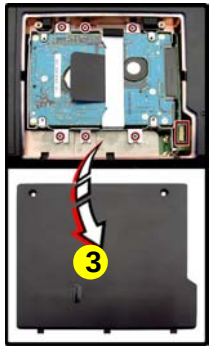

c.

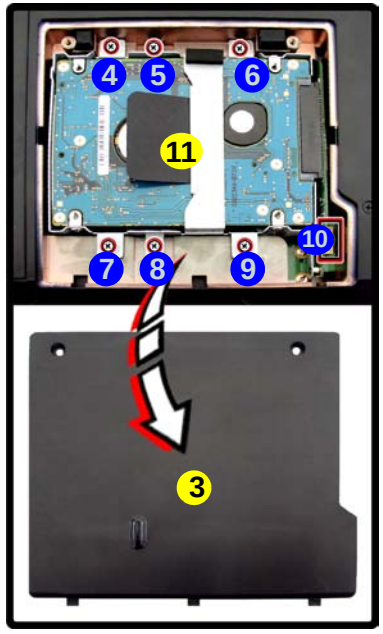

d.

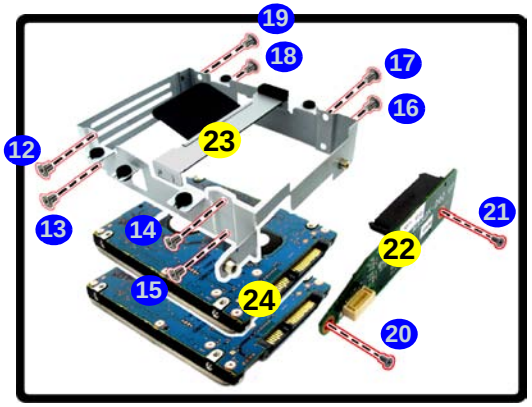

3. Hard Disk Bay Cover
11. Hard Disk Assembly
22. HDD connector
23. HDD case
24. HDD

- 18 Screws

Figure 4
Secondary HDD Assembly Removal

a. Remove the screws and slide the hard disk assembly in the direction of the arrow.
b. Lift the hard disk assembly out off the computer.
c. Remove the screws to release the hard disk from the case.

Removing the Hard Disk(s) in the Secondary HDD Bay

1. Turn **off** the computer, and turn it over and remove the battery.
2. The secondary hard disk bay is located under the battery compartment.
3. Remove screw 1 - 4.
4. Slide the hard disk assembly in the direction of the arrow 5.
5. Lift the hard disk assembly 6 out of the compartment.
6. Remove the screws 7 - 10 to release the hard disk from the case 11 .
7. Reverse the process to install any new hard disk(s).

a.

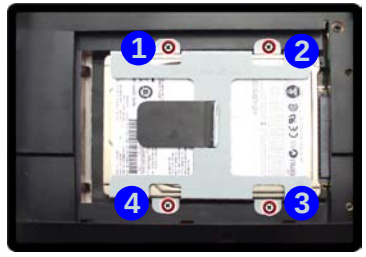

b.

c.

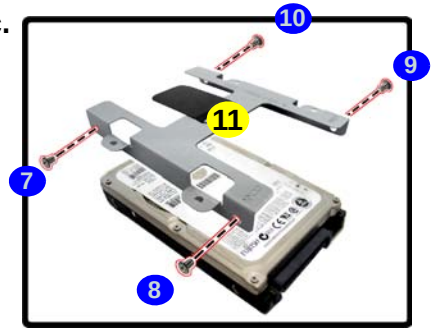

6. Hard Disk Assembly
11. Hard Disk Case

- 8 Screws

Removing the System Memory (RAM)

The computer has two memory sockets for 204 pin Small Outline Dual In-line Memory Modules (SO-DIMM) DDR III (DDR3) supporting 1066/1333 MHz. The main memory can be expanded up to 4GB. The SO-DIMM modules supported are 1024MB and 2048MB **DDR** Modules. The total memory size is automatically detected by the POST routine once you turn on your computer.

Memory Upgrade Process

1. Turn off the computer, and turn it over and remove the battery (***page 2 - 5***).
2. Remove screws 1 & 2 from the bottom of the computer.
3. Turn the computer over, open the Lid/LCD, and carefully (a cable is connected to the underside of the LED cover module) unsnap up the LED cover module from point 3 on the right.
4. Lift up the LED cover module 4 and disconnect the cable 5.
5. Remove screws 6 - 10 from the keyboard.

Figure 5
RAM Module Removal

a. Remove the screws from the bottom of the computer.
b. Turn the computer over, open the lid/ LCD and unsnap the LED cover at point 3.
c. Lift the LED cover module and discon- nect the cable.
d. Remove the screws from the keyboard.

a.

c.

b.

d.

- 7 Screws

Figure 6
RAM Module Removal (cont'd.)

e. Disconnect the cable from the locking collar.
f. Remove the keyboard and keyboard plate.
g Pull the release latch(es).
h. Remove the module(s).

Contact Warning

Be careful not to touch the metal pins on the module's connecting edge. Even the cleanest hands have oils which can attract particles, and degrade the module's performance.

13. Keyboard
14. Keyboard Shielding Plate
17. RAM Module(s)

6. Carefully lift the keyboard up, being careful not to bend the keyboard ribbon cable.
7. Disconnect the keyboard ribbon cable 11 from the locking collar socket 12.
8. Remove the keyboard 13 and keyboard shielding plate 14 .

e.

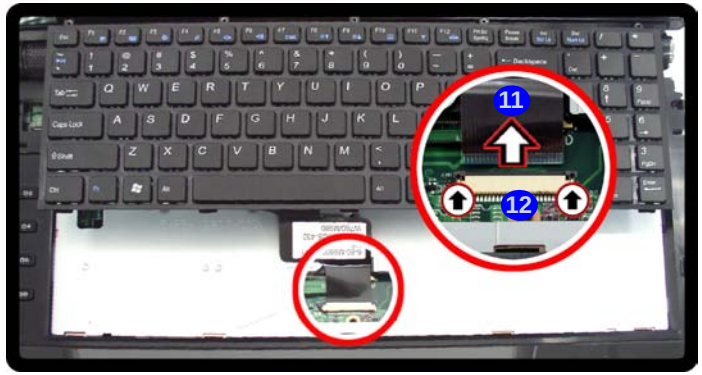

f.

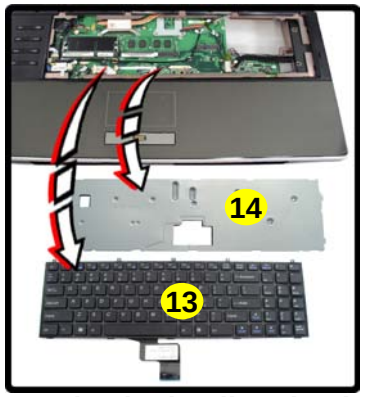

9. Gently pull the two ***release latches 15 & 16 on the sides of the memory socket in the direction indicated by the arrows (Figure f***).
10. The RAM module 17 will pop-up (***Figure g***), and you can then remove it.

g.

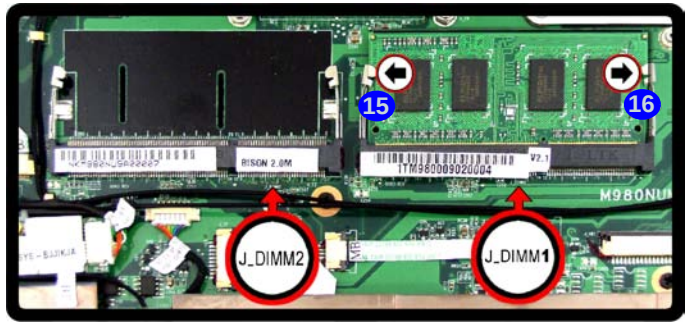

h.

Single Memory Module Installation

If your computer has a single memory module, then insert the module into the **Channel 0 (JDIMM1)** socket as shown in ***Figure 6 g***.

11. Pull the latches to release the second module if necessary.
12. Insert a new module holding it at about a 30° angle and fit the connectors firmly into the memory slot.
13. The module's pin alignment will allow it to only fit one way. Make sure the module is seated as far into the socket as it will go. DO NOT FORCE the module; it should fit without much pressure.
14. Press the module in and down towards the mainboard until the slot levers click into place to secure the module.

15. Replace the shielding plate, keyboard and screws (make sure to reconnect the keyboard cable).
16. Snap the LED cover module down at the top fo the module at point 18 & 19.

i.

17. Push the LED cover module down on the left side at point 20, and then slide the module to the right (as illustrated) and snap down to secure it in place.

j.

18. Replace the scews on the bottom of the computer ().
19. Restart the computer to allow the BIOS to register the new memory configuration as it starts up.

Figure 7
RAM Module Removal (cont'd.)

i. Snap down the LED cover at point 18 & 19.
j. Push the LED cover on the left side at point20 and the slide toward the right to secure it in place.

Figure 8
Processor Removal

a. Remove the screws.
b. Lift the cover and disconnect the fan cable.
c. Loosen the screws and remove the heat sink..

Removing and Installing the Processor

Processor Removal Procedure

1. Turn off the computer, and turn it over, remove the battery (*page 2 - 5*).
2. Locate the component bay cover and remove screws 1 - 5.
3. Carefully (**a fan and cable are attached to the under side of the cover**) lift up the bay cover.
4. Carefully disconnect the fan cable 6, and remove the bay cover 7 .
5. Loosen the CPU heat sink screws 8 - 11.
6. Carefully (it may be hot) lift up the heat sink 12 off the computer.

a.

b.

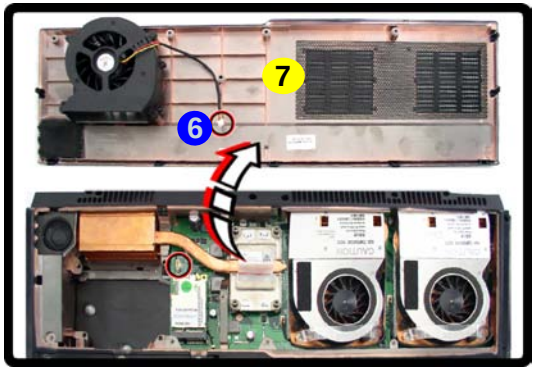

c.

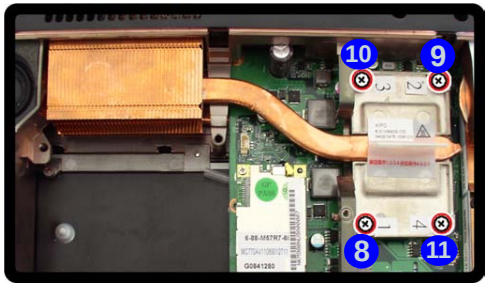

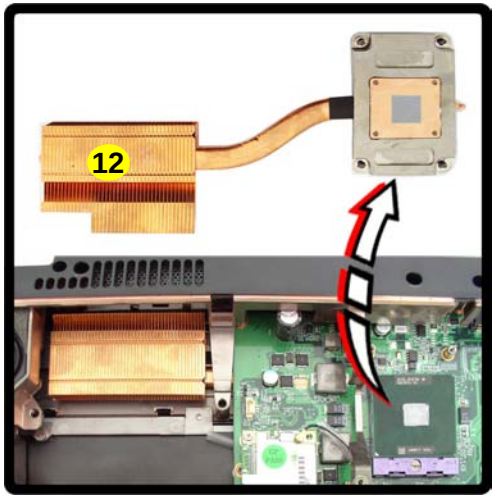

Caution

The heat sink, and CPU area in general, contains parts which are subject to high temperatures. Allow the area time to cool before removing these parts.

7. Bay Cover
12. Heat Sink

- 5 Screws

7. Turn the release latch 13 towards the unlock symbol 🔓, to release the CPU (*Figure 9a*).
8. Carefully (it may be hot) lift the CPU 14 up out of the socket (*Figure 9b*).
9. See *page 2 - 14* for information on inserting a new CPU.
10. Reverse the process to install a new CPU.
11. When re-inserting the CPU, pay careful attention to the pin alignment, it will fit only one way (DO NOT FORCE IT!).

Figure 9
Processor Removal (cont'd)

d. Turn the release latch to unlock the CPU.
e. Lift the CPU out of the socket.

d.

Unlock

Lock

e.

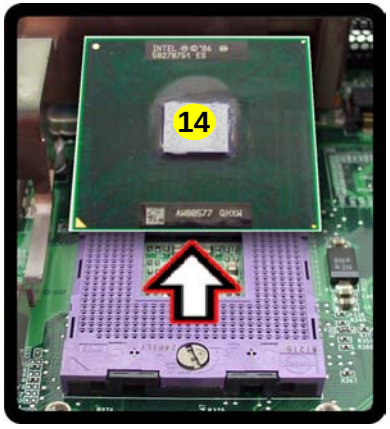

Caution

The heat sink, and CPU area in general, contains parts which are subject to high temperatures. Allow the area time to cool before removing these parts.

14. CPU

Figure 10
Processor Installation

a. Insert the CPU.
b. Turn the release latch towards the lock symbol.
c. Remove the sticker from the heat sink and insert the heat sink.
d. Tighten the screws.

Processor Installation Procedure

1. Insert the CPU A, pay careful attention to the pin alignment, it will fit only one way (DO NOT FORCE IT!), and turn the release latch B towards the lock symbol 🔒 (***Figure 10b***).
2. **Remove the sticker** C (***Figure 10c***) from the heat sink.
3. Insert the heat sink D as indicated in ***Figure 10c***.
4. Tighten the CPU heat sink screws 1, 2, 3, & 4 (***Figure 10d***).
5. Replace the component bay cover and tighten the screws (***page 2 - 12***).

a.

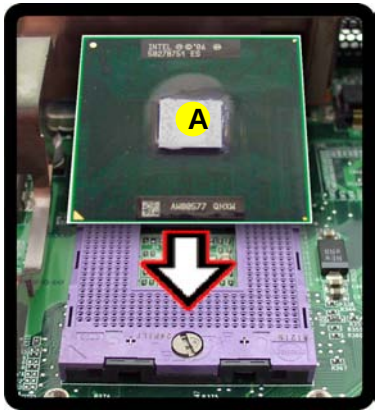

c.

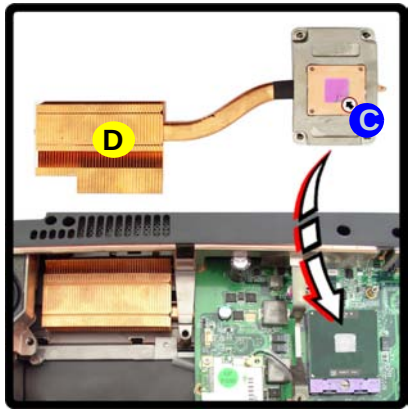

b.

d.

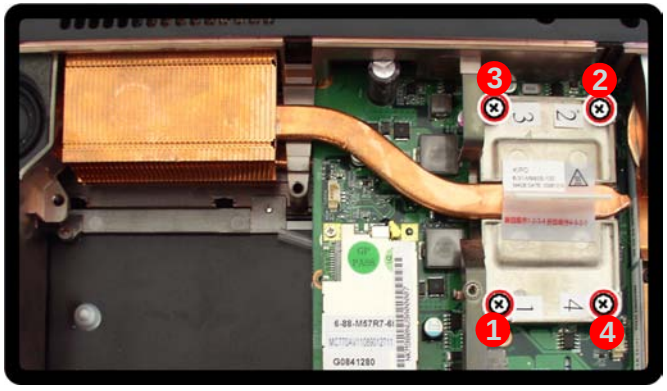

A. CPU
D. Heat Sink

- 4 Screws

Removing the VGA Card

1. Turn off the computer, and turn it over and remove the battery (*page 2 - 5*).
2. Locate the component bay cover and remove screws 1 - 5
3. Carefully (**a fan and cable are attached to the under side of the cover**) lift up the bay cover.
4. Carefully disconnect the fan cable 6, and remove the bay cover 7 .
5. Remove screws 8 - 10 (two video cards are pictured here) from the video card fan(s) and disconnect the fan cable(s) 11 (if two cards are present).
6. Remove the VGA card fan 12 .

Figure 11
VGA Card Removal

a. Remove the screws.
b. Remove the cover and disconnect the cable(s).
c. Remove the screws and release the VGA card fan.

a.

c.

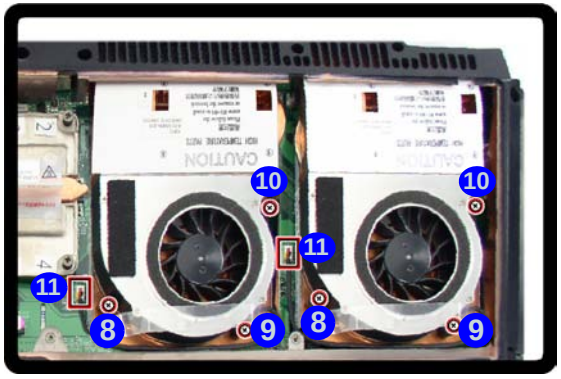

b.

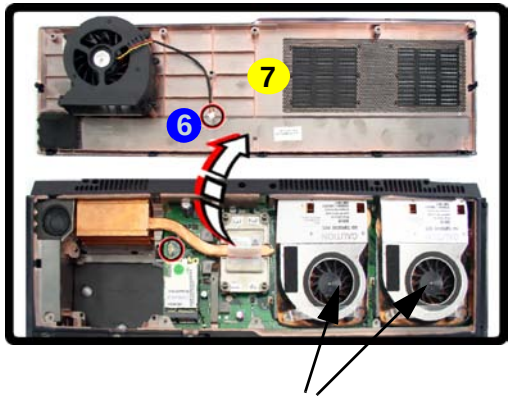

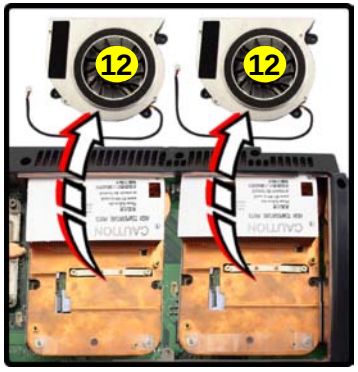

7. Bay Cover
12. VGA card fan

- 11 Screws

Figure 12
VGA Card Removal (cont'd.)

d. Remove the screws.
e. Remove the VGA heatsink.
f. Remove the VGA module.

7. Remove screws 13 - 16 from the heatsink **in the order indicated on the label** (two video cards are pictured here).
8. Grip the handle 17 and carefully remove the heatsink 18 .
9. Remove screws 19 - 20 from the video card.
10. Carefully remove the VGA card module 21 from the mainboard.

d.

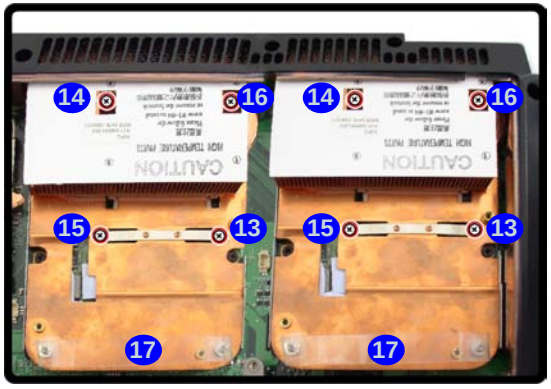

e.

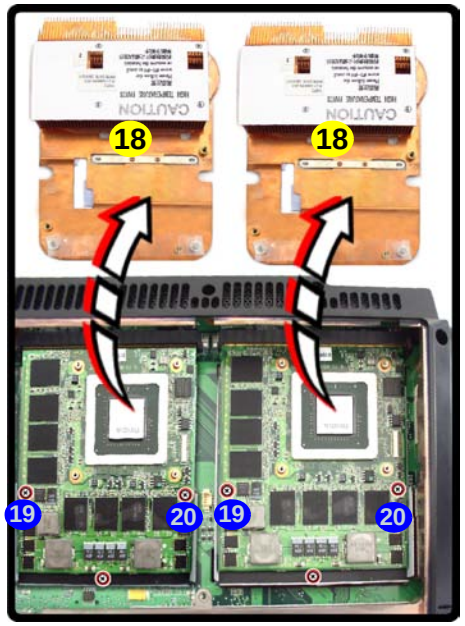

f.

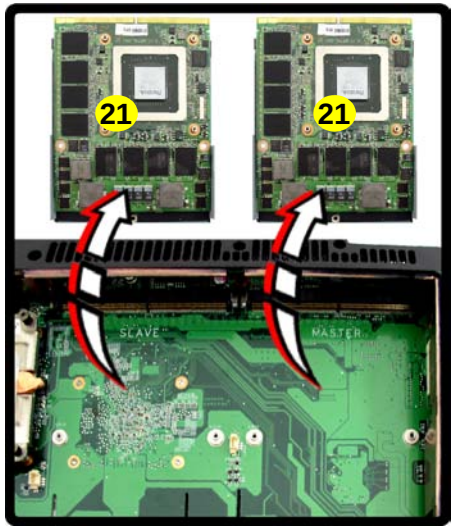

18. VGA Card Heatsink
21. VGA Card Module

- 16 Screws

11. Reverse the process to install a new VGA card modules.

Installing the VGA Card

1. Prepare to fit the VGA card 22 into the slot by holding it at about a 30° angle.
2. The card needs to be fully into the slot, and the VGA card and socket have a guide-key and pin which align to allow the card to fit securely.
3. Fit the connectors firmly into the socket, straight and evenly.
4. DO NOT attempt to push one end of the card in ahead of the other.
5. The card's pin alignment will allow it to only fit one way. **Make sure the module is seated as far into the socket as it will go** (none of the gold colored contact should be showing). DO NOT FORCE the card; it should fit without much pressure.
6. Secure the card with screws 19 - 21 (*Figure 12e on page 2 - 16*).
7. Place the heatsink 18 back on the card, and secure the screws in the order indicated in *Figure 12e on page 2 - 16*.
8. Attach the VGA card fan and secure with the screws as indicated in *Figure 11 on page 2 - 15*.
9. Reinsert the component bay cover, and secure with the screws as indicated in *Figure 11 on page 2 - 15*.

Figure 13
VGA Card Installation

a. Carefully Insert the VGA Card.

a.

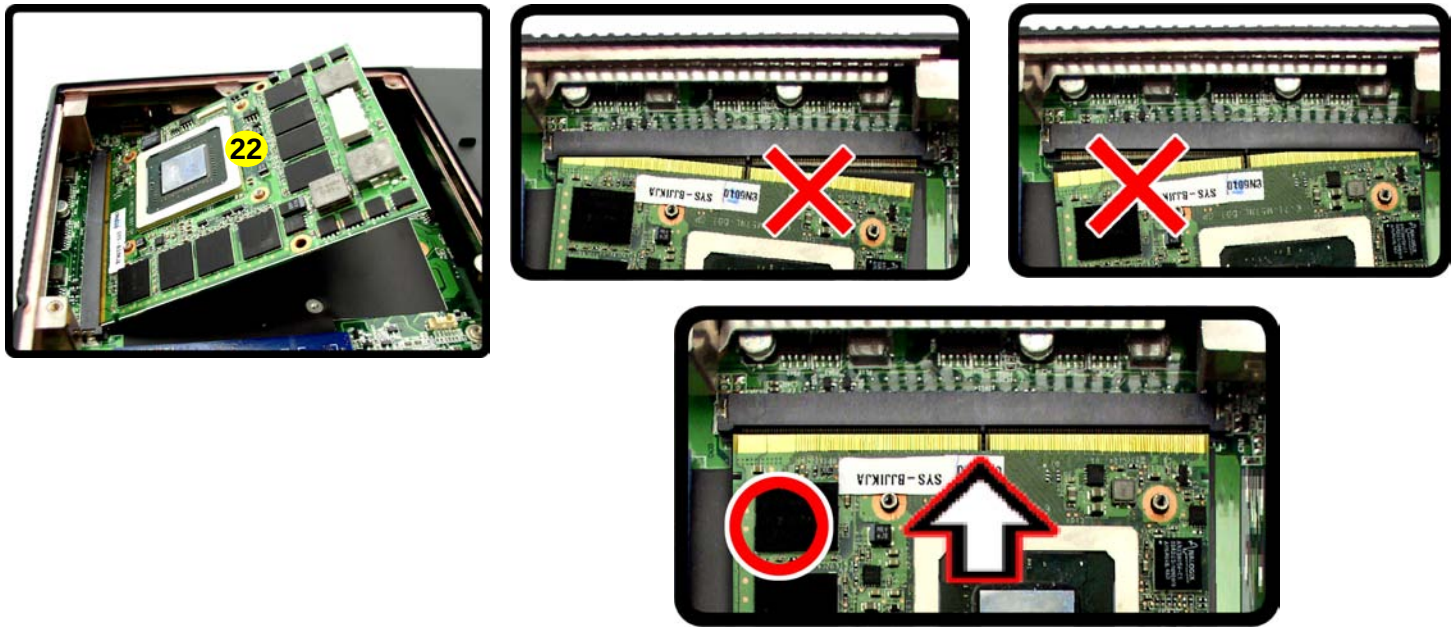

22. VGA card Module

Figure 14
Wireless LAN Module Removal

a. Locate the WLAN module.
c. Remove the screw and disconnect the cables.
d. Remove the WLAN module.

Note: Make sure you reconnect the antenna cables.

Removing the Wireless LAN Module

1. Turn off the computer, and turn it over, remove the battery (***page 2 - 5***), keyboard and keyboard shielding plate (***page 2 - 9***).
2. The Wireless LAN Module will be visible at point 1.
3. Remove the screw 2 and carefully disconnect cables 3 - 5.
4. The Wireless LAN Module 6 (***Figure c***) will pop-up, and you can remove it.

a.

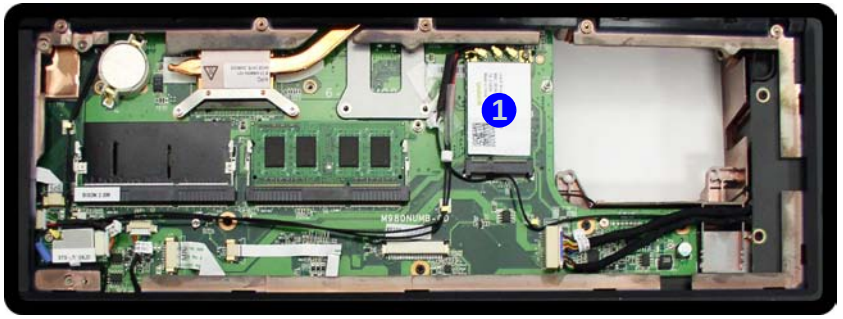

b.

C.

6. Wireless LAN Module

- 1 Screw

Removing the Bluetooth Module

1. Turn off the computer, and turn it over, remove the battery (*page 2 - 5*), keyboard and keyboard shielding plate (*page 2 - 9*).
2. The Bluetooth module is visible at point 1.
3. Carefully disconnect cables 2 & 3 and remove the screw 4.
4. Lift the Bluetooth module 5 off the computer.

a.

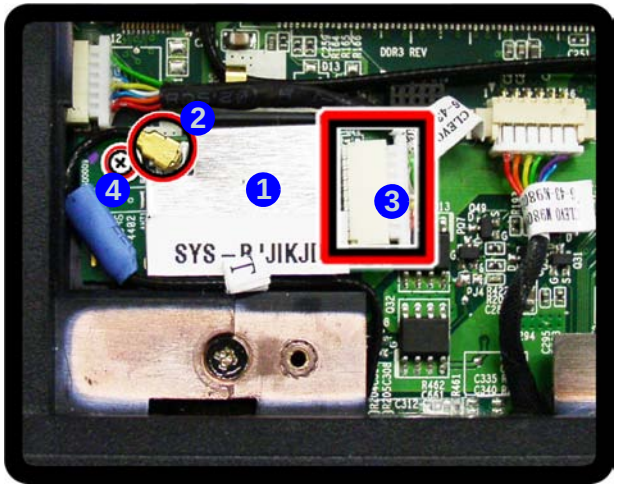

b.

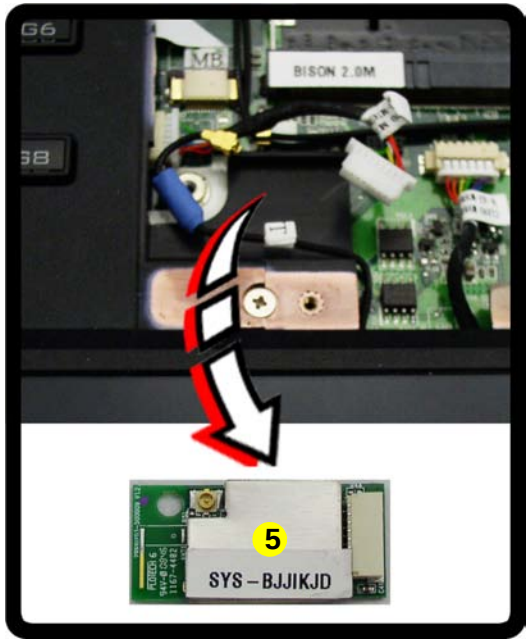

Figure 15
Bluetooth Module Removal

a. Disconnect the cables and remove the screw.
b. Remove the Bluetooth module.

Note: Make sure you reconnect the antenna cables to the socket (*Figure a*).

5. Bluetooth Module

- 1 Screw

Figure 16
TV Tuner Card Removal

a. Remove the screws and disconnect the cable.
b. The TV tuner card will pop up and remove it.

Removing the TV Tuner Card

1. Turn off the computer, and turn it over, remove the battery (***page 2 - 5***) and component bay cover (***page 2 - 12***).
2. The TV tuner card is visible at point 1.
3. Remove the screw 2 from the TV tuner module and disconnect the cable 3 .
4. The TV tuner card 4 will pop-up and and you can remove it.

.

a.

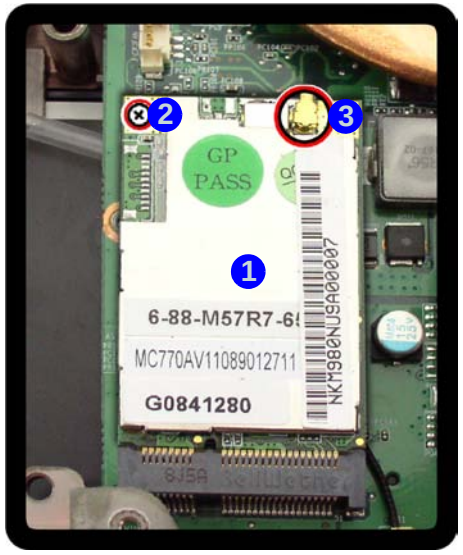

b.

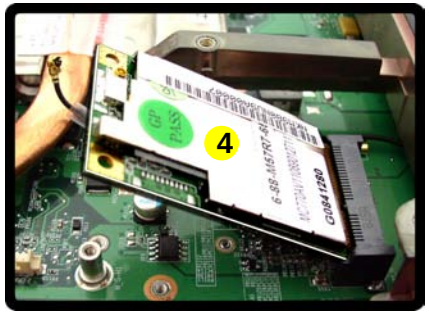

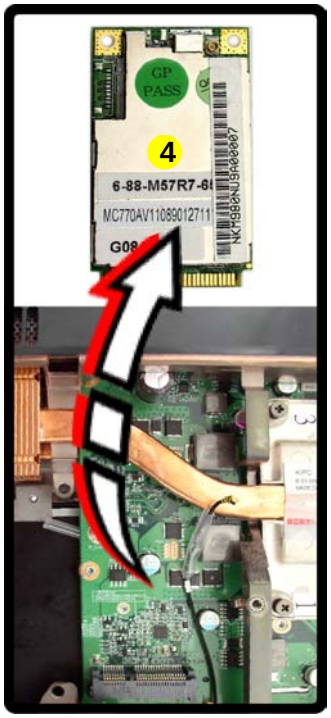

4. TV tuner card

- 1 Screw

Appendix A: Part Lists

This appendix breaks down the ***M980NU*** series notebook's construction into a series of illustrations. The component part numbers are indicated in the tables opposite the drawings.

Note: This section indicates the *manufacturer's* part numbers. Your organization may use a different system, so be sure to cross-check any relevant documentation.

Note: Some assemblies may have parts in common (especially screws). However, the part lists DO NOT indicate the total number of duplicated parts used.

Note: Be sure to check any update notices. The parts shown in these illustrations are appropriate for the system at the time of publication. Over the product life, some parts may be improved or re-configured, resulting in *new* part numbers.

Part List Illustration Location

The following table indicates where to find the appropriate part list illustration.

Table A- 1
Part List Illustration Location

Parts	M980NU
Top with Fingerprint	*page A - 3*
Top without Fingerprint	*page A - 4*
Bottom	*page A - 5*
LCD	*page A - 6*
Mainboard	*page A - 7*
Blu-Ray Combo	*page A - 8*
DVD Super Multi	*page A - 9*

Top with Fingerprint

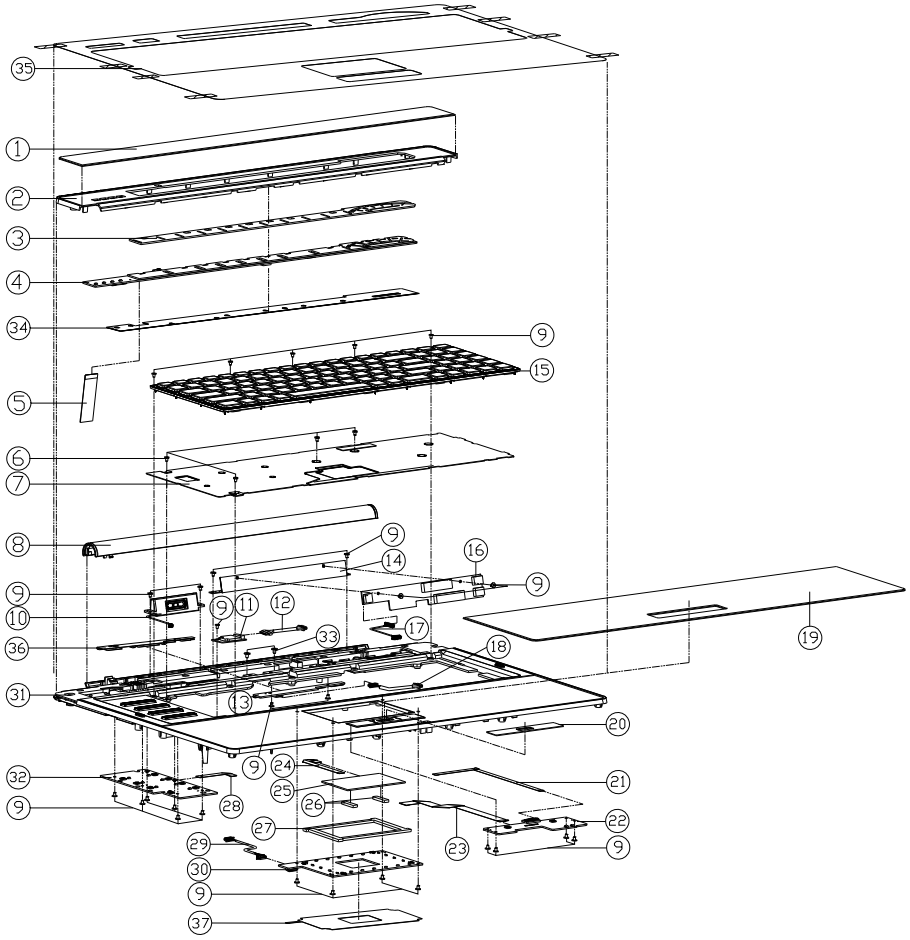

ITEM	PART NAME	PART NO	REMARK
1	PMMA FOR CENTER COVER M980NU	6-42-M9802-011	
2	CENTER COVER MODULE M980NU	6-42-M9802-201	
3	LIGHT GUIDE FOR CENTER COVER PC M980NU	6-42-M9802-092	
4	TOUCH SENSOR BOARD V30A M980NU	6-77-M9801-D03A	
5	WIRE CABLE FOR M/B TO TOUCH-SENSOR ZIP M980NU	6-43-M9803-012	
6	SCREW M2*3L K1 N1 ICT NY	6-35-B1120-3RA	
7	KB SHIELDING MODULE SECC M980NU	6-33-M9807-012	
8	INVERTOR COVER MODULE M980NU	6-33-M980R-201	
9	SCREW M2*3L K1 N1 ICT GIY-PATCH	6-35-B1120-3RE	
10	SPEAKER MODULE FOR TOP CASE	6-23-5M980-030	
11	[illegible]	6-88-M7315-3900	
12	WIRE CABLE GPIN M/B TO GPIN BLUETOOTH MODULE FOR NANS	6-43-M74SB-010	
13	BACK L SIDE LED BOARD V30A M980NU	6-77-M9803-D03A	
14	INVERTOR BKT SECC M980NU	6-33-M980R-020	
15	K/B LOCKING SL FRAME (LK) MODULE M980NU	6-79-M980NU0K-190	
16	INVERTER MODULE 80A W/ACCA-2NA-CYALF FOR M980NU	6-76-M980R-011	
17	WIRE CABLE FOR M/B TO INVERTOR GP M980NU V20	6-43-M980R-011	
18	WIRE CABLE FOR M/B TO FAN-LED GP M980NU V20	6-43-M9800-071	
19	PMMA FOR PLAM REST M980NU	6-42-M9802-061	
20	PMMA FOR GP KNOB WITH FINGER M980NU	6-42-M9802-071	
21	FFC CABLE GP FOR M/B TO FINGERPRINT BOARD V20 M980NU	6-43-M980F-011	
22	CLICK BOARD V20+FINGER BOARD V20 ASSY M980NU	6-77-M980A-N03-1	
23	FFC CABLE EPP FOR M/B TO CLICK BOARD V20	6-43-M9800-041	
24	FFC CABLE EPP FOR M/B TO TOUCH PAD BOARD V20	6-43-M9802-011	
25	TOUCH PAD SYNAPTICS TM-01298-001 M74NS	6-49-M74S2-010	
26	TOUCH PAD SPONGE (8*54*2) CM305 M980NU	6-47-M9802-020	
27	LIGHT GUIDE FOR TOUCH PAD PC M980NU	6-42-M9802-0A1	
28	FFC CABLE EPP FOR M/B TO GAME-KEY BOARD V20	6-43-M9800-011	
29	WIRE CABLE FOR M/B TO TOUCH-PAD-LED GP M980NU	6-43-M9802-021	
30	TOUCH PAD LED BOARD V30A M980NU	6-77-M980G-D03A	
31	TOP CASE MODULE M980NU	6-39-M9802-012	
32	GAME-KEY BOARD V30 M980NU	6-77-M9807-D03	
33	SCREW M2.5*5L 0.4MM K1 BK/Z ICT NY-	6-35-B6125-5R0	
34	MYLAR CU FOIL FOR CENTER COVER M980NU	6-40-M9802-030	
35	TOP CASE PROTECT MYLAR PET M980NU	6-40-M9802-020	
36	MYLAR FOR FAN LED PCBFPRO T=0.075*340*88	6-40-M980S-050	
37	TOUCH PAD LED BOARD MYLAR FR03 M980NU	6-40-M980S-010	

Figure A - 1
Top with Fingerprint

Top without Fingerprint

Figure A - 2
Top without Fingerprint

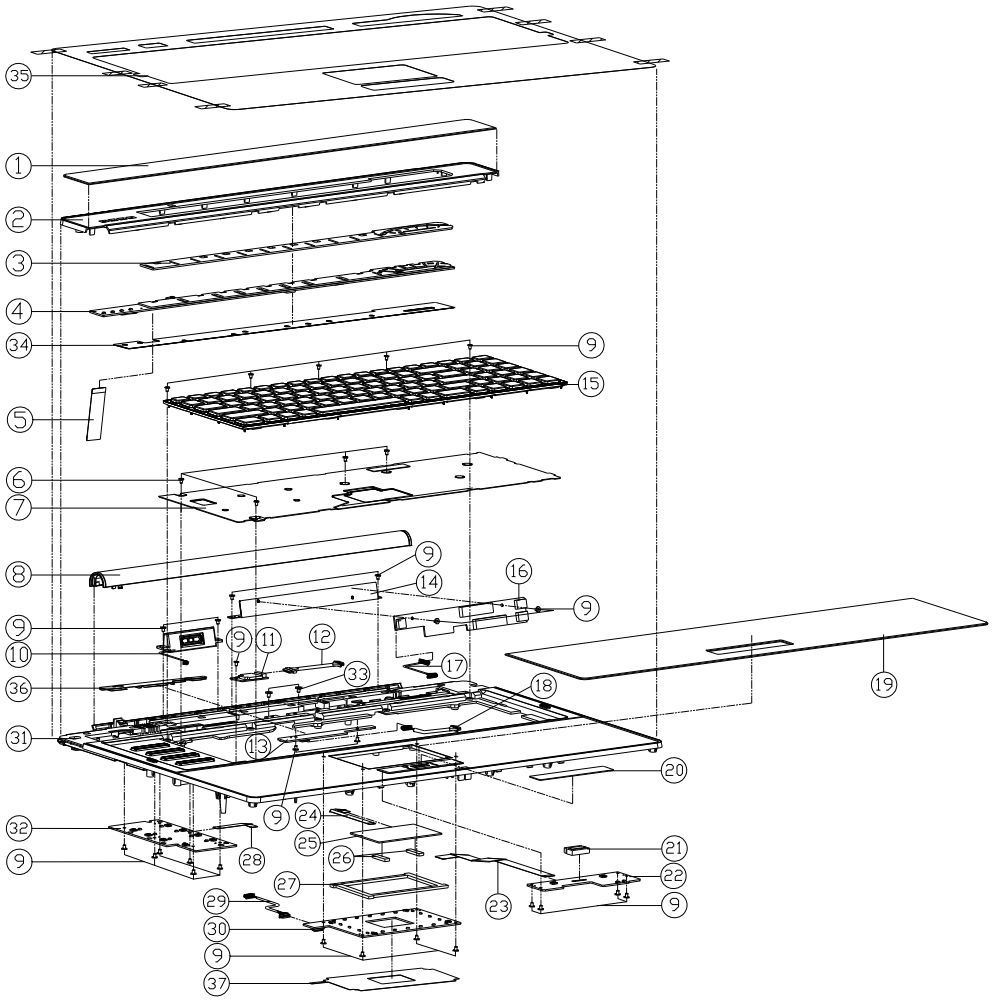

ITEM	PART NAME	PART NO	REMARK
1	PMMA FOR CENTER COVER M980NU	6-42-M9802-011	
2	CENTER COVER MODULE M980NU	6-42-M9802-201	
3	LIGHT GUIDE FOR CENTER COVER PC M980NU	6-42-M9802-092	
4	TOUCH SENSOR BOARD V3.0A M980NU	6-77-M9801-D03A	
5	WIRE CABLE FOR M/B TO TOUCH-SENSOR 28P M980NU	6-43-M9803-012	
6	SCREW M2*3L K1 NI ICT NY	6-35-B1120-3RA	
7	KB SHIELDING MODULE SECC M980NU	6-33-M9807-012	
8	INVERTOR COVER MODULE M980NU	6-33-M980R-201	
9	*[illegible]SCREW M2*3L K1 NI ICT GTY-PATCH	6-35-B1120-3RE	
10	SPEAKER MODULE FOR TOP CASE 15W 4Ω 2P M980NU	6-23-5M980-030	
11	[illegible]	6-88-M73T5-3900	
12	WIRE CABLE GPN M/B TO BPN BLUETOOTH MODULE FOR NANE	6-43-M74SB-010	
13	BACK L SIDE LED BOARD V3.0A M980NU	6-77-M9803-D03A	
14	INVERTOR BKT SECC M980NU	6-33-M980R-020	
15	K/B UK[illegible] FRAME (UK) MODULE M980NU	6-79-M980NU0K-190	
16	INVERTER MODULE RDA M14AG10A-2A08-CV6AL FOR M980NU	6-76-M980R-011	
17	WIRE CABLE FOR M/B TO INVERTOR 6P M980NU V2.0	6-43-M980R-011	
18	WIRE CABLE FOR M/B TO FAN-LED 6P M980NU V2.0	6-43-M9800-071	
19	PMMA FOR PLAM REST M980NU	6-42-M9802-061	
20	PMMA FOR GP KNOB W/O FINGER M980NU	6-42-M9802-081	
21	RUBBER FOR GP KNOB DUMMY M980NU	6-47-M9802-050	
22	CLICK BOARD V3.0A(W/O FP) M980NU	6-77-M9802-D03A	
23	FFC CABLE 12P FOR M/B TO CLICK BOARD V2.0	6-43-M9800-041	
24	FFC CABLE 12P FOR M/B TO TOUCH PAD BOARD V2.0	6-43-M9802-011	
25	TOUCH PAD SYNAPTICS TM-00398-001 M74SS	6-49-M74S2-010	
26	TOUCH PAD SPONGE (38*5*2) CR4305 M980NU	6-47-M9802-020	
27	LIGHT GUIDE FOR TOUCH PAD PC M980NU	6-42-M9802-0A1	
28	FFC CABLE 12P FOR M/B TO GAME-KEY BOARD V2.0	6-43-M9800-011	
29	WIRE CABLE FOR M/B TO TOUCH-PAD-LED 6P M980NU	6-43-M9802-021	
30	TOUCH PAD LED BOARD V3.0A M980NU	6-77-M980G-D03A	
31	TOP CASE MODULE M980NU	6-39-M9802-012	
32	GAME-KEY BOARD V3.0 M980NU	6-77-M9807-D03	
33	SCREW M2.5*5L [illegible]0.4MM K1 BK/Z ICT NY-	6-35-B6125-5R0	
34	MYLAR CU FOIL FOR CENTER COVER M980NU	6-40-M9802-030	
35	TOP CASE PROTECT MYLAR PET M980NU	6-40-M9802-020	
36	MYLAR FOR FAN LED PCBFR83 T=0.075*3M9888T	6-40-M980S-050	
37	TOUCH PAD LED BOARD MYLAR FR83 M980NU	6-40-M980S-010	

Bottom

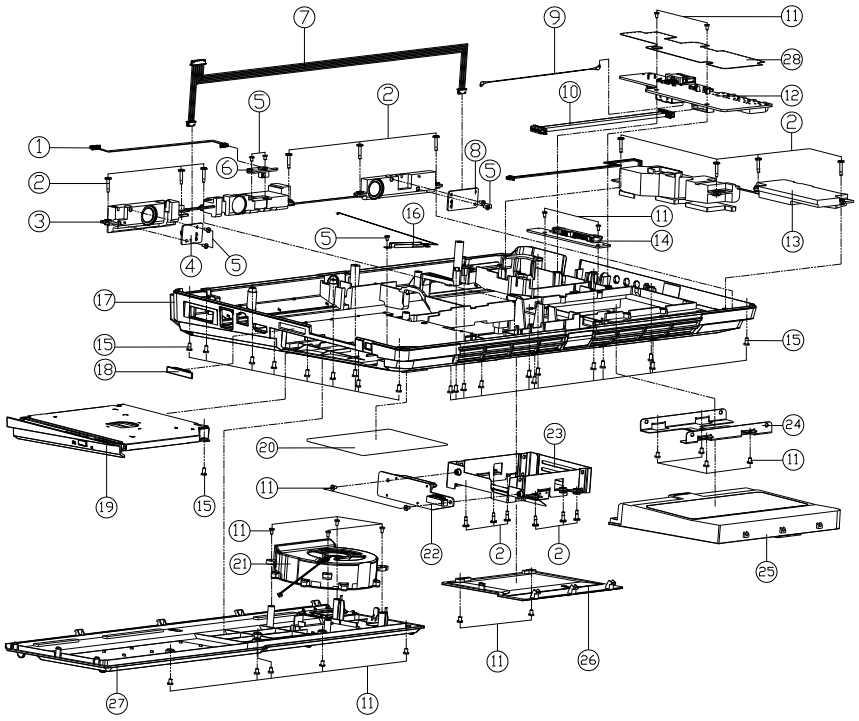

ITEM	PART NAME	PART NO	REMARK
1	WIRE CABLE FOR W/O TO POWER-BOTTOM 3P M980NJ	6-43-M9800-020	
2	SCREW M3×7.5L D1=21 L=45 S=25 K NI ICT	6-35-B1120-750	
3	SPEAKER L/R-R MODULE 2W 4 6P M980NJ	6-23-5M980-022	
4	FRONT R SIDE LED BOARD V3.0A M980NJ	6-77-M9804-D03A	
5	SCREW M3×3L K1 NI ICT GIY-PATCH	6-35-B1120-3RE	
6	CIR BOARD V3.0 ASS'Y M980NJ	6-77-M980H-D03	
7	WIRE CABLE FOR W/O TO LED-R-L 6P M980NJ V1.0	6-43-M9800-061	
8	FRONT L SIDE LED BOARD V3.0A M980NJ	6-77-M9805-D03A	
9	COAXIAL CABLE BLACK L=240MM FOR TV TUNER M980NJ	6-43-M980T-010	
10	WIRE CABLE FOR W/O TO AUDIO 30P M980NJ V1.0	6-43-M9800-051	
11	SCREW M2.5×5L K1 BK/Z ICT NY	6-35-B6125-5RA	
12	AUDIO BOARD V3.0 M980NJ	6-77-M9808-D03	
13	SPEAKER SUB WOOFER MODULE 2W 4 4P M980NJ	6-23-5M980-011	
14	PCB SINGLE HDD BOARD V3.0A M980NJ	6-77-M980J-D03A	
15	SCREW M2.5×8L K1 BK/Z NY ICT	6-35-B6125-8R0	
16	ANTENNA-BLUETOOTH 2.4G PIFA , L=70MM II M980NJ	6-23-7M980-040	
17	BOTTOM CASE MODULE M980NJ	6-39-M9803-012	
18	CARD READER RUBBER KC-5620U BLACK 6P M980NJ	6-47-M980E-011	
19	SATA DVD SUPER MULTI 24X/8X ASS'Y M980NJ	6-79-M980NJ00-000	
19	SATA BLU-RAY COMBO 5 1/4" 4X ASS'Y M980NJ	6-79-M980NJ0W-000	
20	PRODUCT LABEL M980NJ	6-45-M9803-012	
21	FAN 60×25MM 5V 0.5A 8S60125H2B 3000RPM A	6-23-AM980-010	
22	DUAL HDD BOARD V3.0 M980NJ	6-77-M980K-D03	
23	2IN1 HDD BKT MODULE M980NJ	6-33-M980J-100	
24	HDD 3 BKT MODULE M980NJ	6-33-M980J-200	
25	BOPS(1) Big-Alumnum 6P 1394+USB+LAN+WIFI+BT+CARD READER M980NJ	6-87-M980S-4X51	
26	HDD COVER PC+ABS(CM6140) M980NJ	6-42-M980J-011	
27	CPU COVER MODULE M980NJ	6-42-M980S-102	
28	AUDIO BOARD MYLAR FR83 M980NJ	6-40-M980S-020	

Figure A - 3
Bottom

LCD

Figure A - 4
LCD

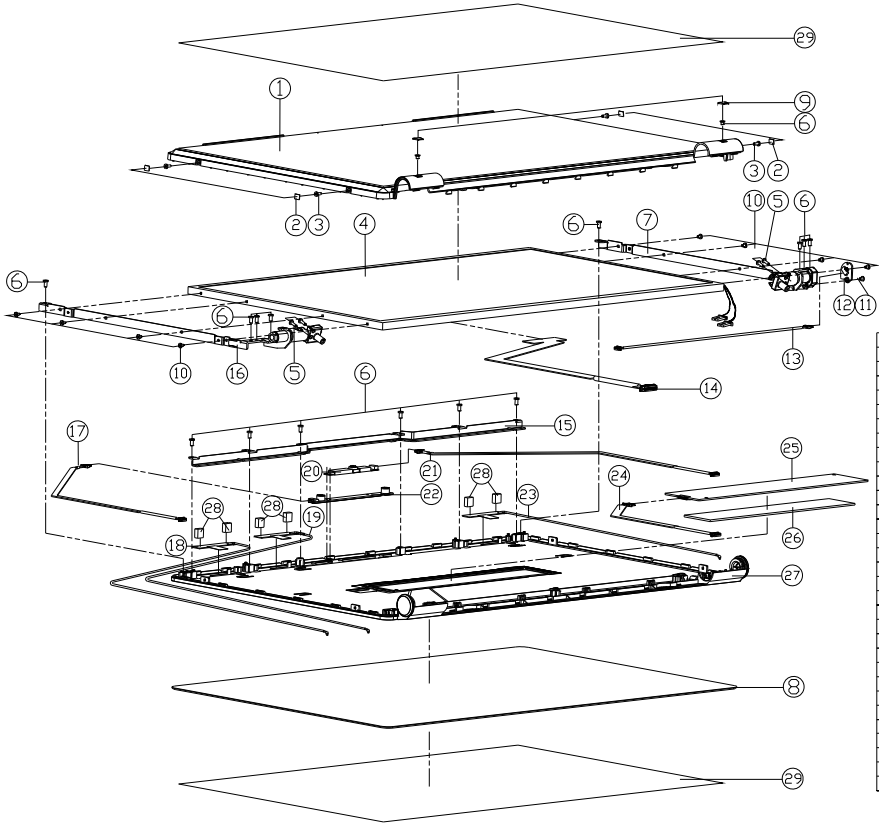

ITEM	PART NAME	PART NO	REMARK
1	LCD FRONT COVER MODULE M980NU	6-39-M9801-011	
2	LCD SCREW MYLAR M980NU	6-40-M9801-021	
3	SCREW M2*5L K1 NI ICT NY	6-35-B1120-5R0	
4	LCD 18.4" FHD SAMSUNG LTN184HT02-W01 (TRANSMISSIVE) 6.5M	6-50-PB265-M00	
4	LCD 18.4" FHD CHINEI N184H-L01 6.5M	6-50-PB265-D03	
4	LCD 18.4" FHD CHINEI N184H-L04 (TRANSMISSIVE) 6.5M	6-50-PB265-D01	
5	SCREW M2.5*8L K1 BK/Z NY ICT	6-35-B6125-8R0	
6	SCREW M2.5*5L K1 BK/Z ICT NY	6-35-B6125-5RA	
7	LCD HINGE R (SECC+SS0C) M980NU	6-33-M9801-022	
8	LOGO PANA FOR LCD BACK COVER(ARCED)	6-42-M9801-032	
9	HINGE CAP RUBBER SILICONE 80 M980NU	6-47-M9801-020	
10	SCREW M2*3L K1 NI ICT NY	6-35-B1120-3RA	
11	SCREW M2*3L K1 NI ICT GIT-PAICH	6-35-B1120-3RE	
12	POWER BUTTON BOARD V3.0A M980NU	6-77-M980W-D03A	
13	WIRE CABLE FOR M/B TO POWER-BUTTON 3P M980NU	6-43-M9800-020	
14	WIRE CABLE FOR M/B TO LCD 30P M980NU V28	6-43-M9801-011	
15	LCD BRACKET TOP SECC M980NU	6-33-M9801-011	
16	LCD HINGE L(SECC+SS0C) M980NU	6-33-M9801-032	
17	WIRE CABLE FOR M/B TO DIG-MIC 4P M980NU V28	6-43-M9804-011	
18	ANTENNA WIRE 2.4G/5.1G/5G PCB WIFI 72CM M980NU	6-23-7M980-011	
19	ANTENNA WIRE 2.4G/5.1G/5G PCB WIFI 80CM M980NU	6-23-7M980-031	
20	UVC CAMERA BISON FIX DA2B2457-6E0 2M N7401	6-88-M740C-4913	(OPTION)
21	WIRE CABLE FOR M/B TO CCD 5P M980NU V28	6-43-M9807-021	
22	DIGITAL-MIC MODULE DK-M02 FOR M980NU	6-23-EM980-010	
23	ANTENNA WIRE 2.4G/5.1G/5G PCB WIFI 45CM M980NU	6-23-7M980-021	
24	WIRE CABLE FOR M/B TO LOGO-LIGHT 6P M980NU	6-43-M9800-031	
25	LOGO LED BOARD V3.0A M980NU	6-77-M9806-D03A	
26	LIGHT GUIDE FOR LCD BACK COVER M980NU	6-42-M9801-080	
27	LCD BACK COVER MODULE M980NU	6-39-M9801-022	
28	ANTENNA SPONGE (8*7*4) (SPONGE+3M9448) M980NU	6-47-0019A-080	
29	LCD PROTECT MYLAR(PET+3M9975) M980NU	6-40-M9801-040	

Mainboard

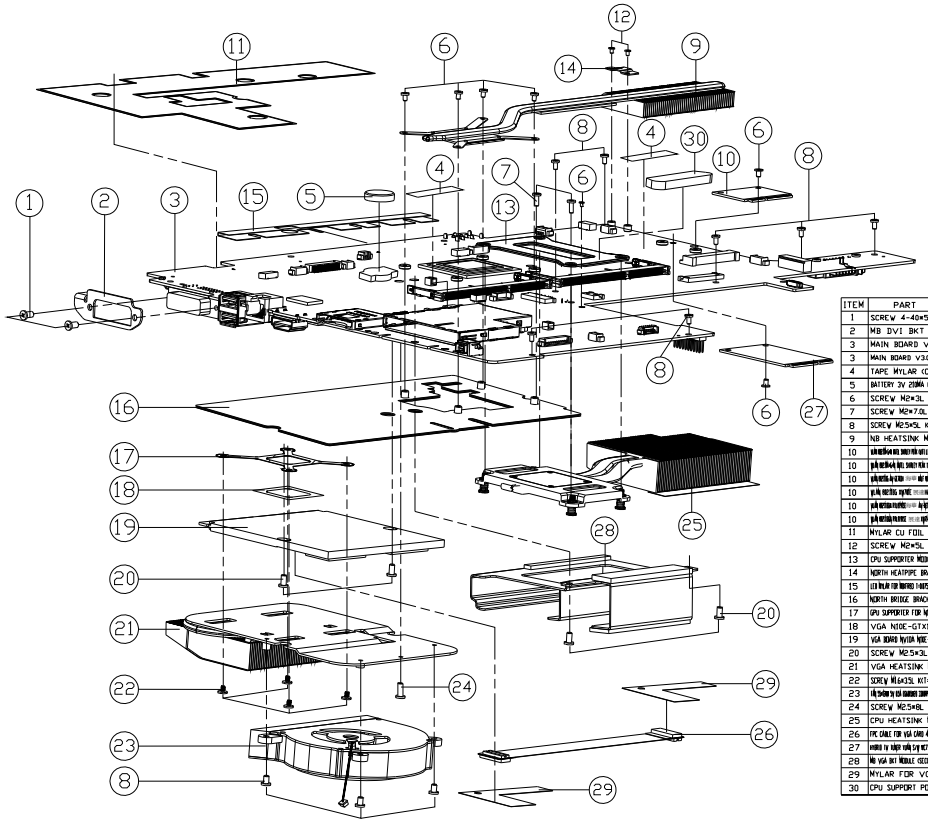

ITEM	PART NAME	PART NO	REMARK
1	SCREW 4-40*5L K NI ACT NY	6-35-81304-5R0	
2	MB DVI BKT SECC M980NU	6-33-M980S-021	
3	MAIN BOARD V3.0A M980NU	6-77-M9800-003A	
3	MAIN BOARD V3.0A(W/TPM) M980NU	6-77-M9800-003A-1	
4	TAPE MYLAR (C),MYLAR M550J	6-40-M55J2-030	
5	BATTERY 3V 210MA CR2032 (MITSUBISHI)	6-23-62015-607	
6	SCREW M2*3L K1 NI ICT NY	6-35-81120-3RA	
7	SCREW M2*7.0L K1 NI ICT NY	6-35-81120-7RA	
8	SCREW M2.5*5L K1 BK/Z ICT NY	6-35-86125-5RA	
9	NB HEATSINK MODULE M980NU	6-31-M980N-101	
10	[illegible]	6-88-M7212-4210	(OPTION)
10	[illegible]	6-88-M7212-4240	(OPTION)
10	[illegible]	6-88-M8102-7001	(OPTION)
10	[illegible]	6-88-M8102-8700	(OPTION)
10	[illegible]	6-88-W76C2-7000	(OPTION)
10	[illegible]	6-88-W76C2-8700	(OPTION)
11	MYLAR CU FOIL FOR MB M980NU	6-40-M980S-081	
12	SCREW M2*5L K1 NI ICT NY	6-35-81120-5R0	
13	CPU SUPPORTER MODULE M570TU (ESD)	6-33-M570S-102	
14	NORTH HEATPIPE BRACKET SECC M980NU	6-33-M980S-080	
15	LED MYLAR FOR MOBILE M-MDC&MITE SERIES (M-65 NO WINDOW)	6-40-M980S-060	
16	NORTH BRIDGE BRACKET MODULE M980NU	6-33-M980S-071	
17	CPU SUPPORTER FOR NIDE GTX1 SUSACK D900F	6-33-D90FS-020	
18	VGA NIDE-GTX1 MYLAR D900F	6-40-D90FS-050	
19	VGA BOARD NVIDIA NIDE-GTX1 DDR3 128/256MB	6-77-M57NL-101-A	(OPTION)
20	SCREW M2.5*3L K1 BZ ICT NY	6-35-86125-3R0	
21	VGA HEATSINK MODULE M980NU	6-31-M980N-203	
22	SCREW M1.6*3.5L K1+12 B-45) BZ ICT NY	6-35-82116-3R5	
23	[illegible]	6-23-AM980-020	
24	SCREW M2.5*8L K1 BK/Z NY ICT	6-35-86125-8R0	
25	CPU HEATSINK MODULE M980NU	6-31-M980S-101	
26	FPC CABLE FOR VGA CARD 40P NCF79,SLI VGA	6-43-M980L-011	ONLY FOR TWO VGA CARD
27	[illegible]	6-88-M5787-6540	(OPTION)
28	MB VGA BKT MODULE (SECC+SLIZTAA+CARD) M980NU	6-33-M980S-050	ONLY FOR ONE VGA CARD
29	MYLAR FOR VGA SLI M980NU	6-40-M9800-010	ONLY FOR TWO VGA CARD
30	CPU SUPPORT PORON L32 M980NU	6-47-M980S-010	

Figure A - 5
Mainboard

Blu-Ray Combo

Figure A - 6
Blu-Ray Combo

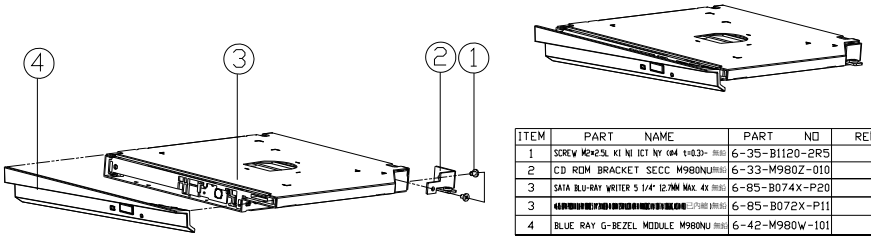

ITEM	PART NAME	PART NO	REMARK
1	SCREW M2*2.5L KI NI ICT NY C#4 t=0.3>- 無鉛	6-35-B1120-2R5	
2	CD ROM BRACKET SECC M980NU無鉛	6-33-M980Z-010	
3	SATA BLU-RAY WRITER 5 1/4" 12.7MM MAX. 4X 無鉛	6-85-B074X-P20	
3	[redacted]二內銷)無鉛	6-85-B072X-P11	
4	BLUE RAY G-BEZEL MODULE M980NU 無鉛	6-42-M980W-101	

DVD Super Multi

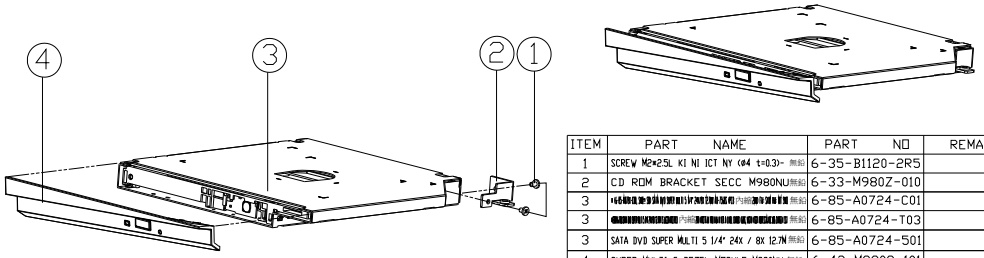

ITEM	PART NAME	PART NO	REMARK
1	SCREW M2*2.5L KI NI ICT NY (#4 t=0.3)- 無鉛	6-35-B1120-2R5	
2	CD ROM BRACKET SECC M980NU無鉛	6-33-M980Z-010	
3	[redacted] 無鉛	6-85-A0724-C01	
3	[redacted] 無鉛	6-85-A0724-T03	
3	SATA DVD SUPER MULTI 5 1/4" 24X / 8X 12.7M無鉛	6-85-A0724-501	
4	SUPER MULTI G-BEZEL MODULE M980NU 無鉛	6-42-M980Q-101	

Figure A - 7
DVD Super Multi

Appendix B: Schematic Diagrams

This appendix has circuit diagrams of the ***M980NU*** notebook's PCB's. The following table indicates where to find the appropriate schematic diagram.

Diagram - Page	Diagram - Page	Diagram - Page
System Block Diagram - Page B - 2	*CRT, DVI - Page B - 19*	*Power 1.0VS - Page B - 36*
PENRYN 1/2 - Page B - 3	*ODD, CCD, BT, USB 2.0 - Page B - 20*	*Power 3.3V/5V - Page B - 37*
PENRYN3 2/2 - Page B - 4	*KBC ITE IT8512-J - Page B - 21*	*Power Charger, DC-In - Page B - 38*
MCP79 FSBI - Page B - 5	*PHY RTL8211CL - Page B - 22*	*Single HDD Board - Page B - 39*
MCP79 MEM CTRL (1) - Page B - 6	*Codec, Subwoofer, DMIC - Page B - 23*	*Dual HDD Board - Page B - 40*
MCP79 MEM CTRL (2) - Page B - 7	*Audio AMP - Page B - 24*	*Audio Board - Page B - 41*
MCP79 PCI-E - Page B - 8	*HDMI Switch - Page B - 25*	*Power Button Board - Page B - 42*
MCP79 LAN, Panel - Page B - 9	*New Card, Mini Card - Page B - 26*	*Click & FP Board - Page B - 43*
MCP79 PCI, LPC - Page B - 10	*Card Reader, IEEE 1394 - Page B - 27*	*Logo LED Board - Page B - 44*
MCP79 SATA, USB - Page B - 11	*MXM 3.0 Master - Page B - 28*	*Game Key Board - Page B - 45*
MCP79 HDA, Misc - Page B - 12	*MXM 3.0 Slave - Page B - 29*	*TouchPad LED Board - Page B - 46*
MCP79 Power - Page B - 13	*MB to Small B'd Connector A - Page B - 30*	*Front R Side LED Board - Page B - 47*
MCP79 GND, RMGT PWR, PWRGD - Page B - 14	*MB to Small B'd Connector B - Page B - 31*	*Front L Side LED Board - Page B - 48*
DDR3 SO-DIMM_0 - Page B - 15	*Power System - Page B - 32*	*Back L Side LED Board - Page B - 49*
DDR SO-DIMM_1 - Page B - 16	*Power VCore - Page B - 33*	*Touch Sensor Board A - Page B - 50*
Panel, Inverter, TPM - Page B - 17	*PWR 1.05V, Screw Hole - Page B - 34*	*Touch Sensor Board B - Page B - 51*
HDMI, Fan Control - Page B - 18	*Power 1.5V/0.75V - Page B - 35*	*CIR Board - Page B - 52*

Table B - 1
Schematic Diagrams

Version Note

The schematic diagrams in this chapter are based upon version 6-7P-M980F-002. If your mainboard (or other boards) are a later version, please check with the Service Center for updated diagrams (if required).

System Block Diagram

Sheet 1 of 53
System Block Diagram

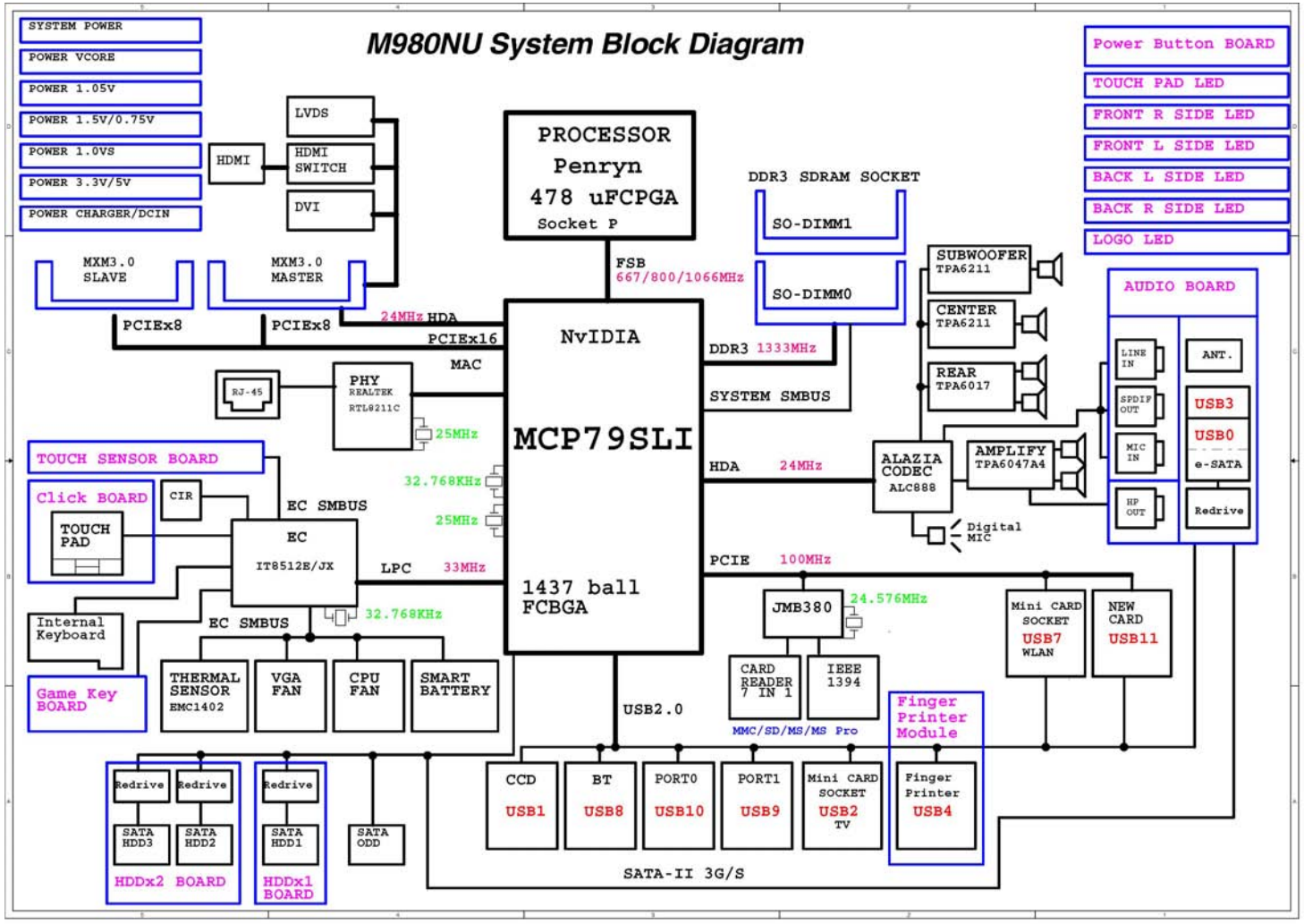

PENRYN 1/2

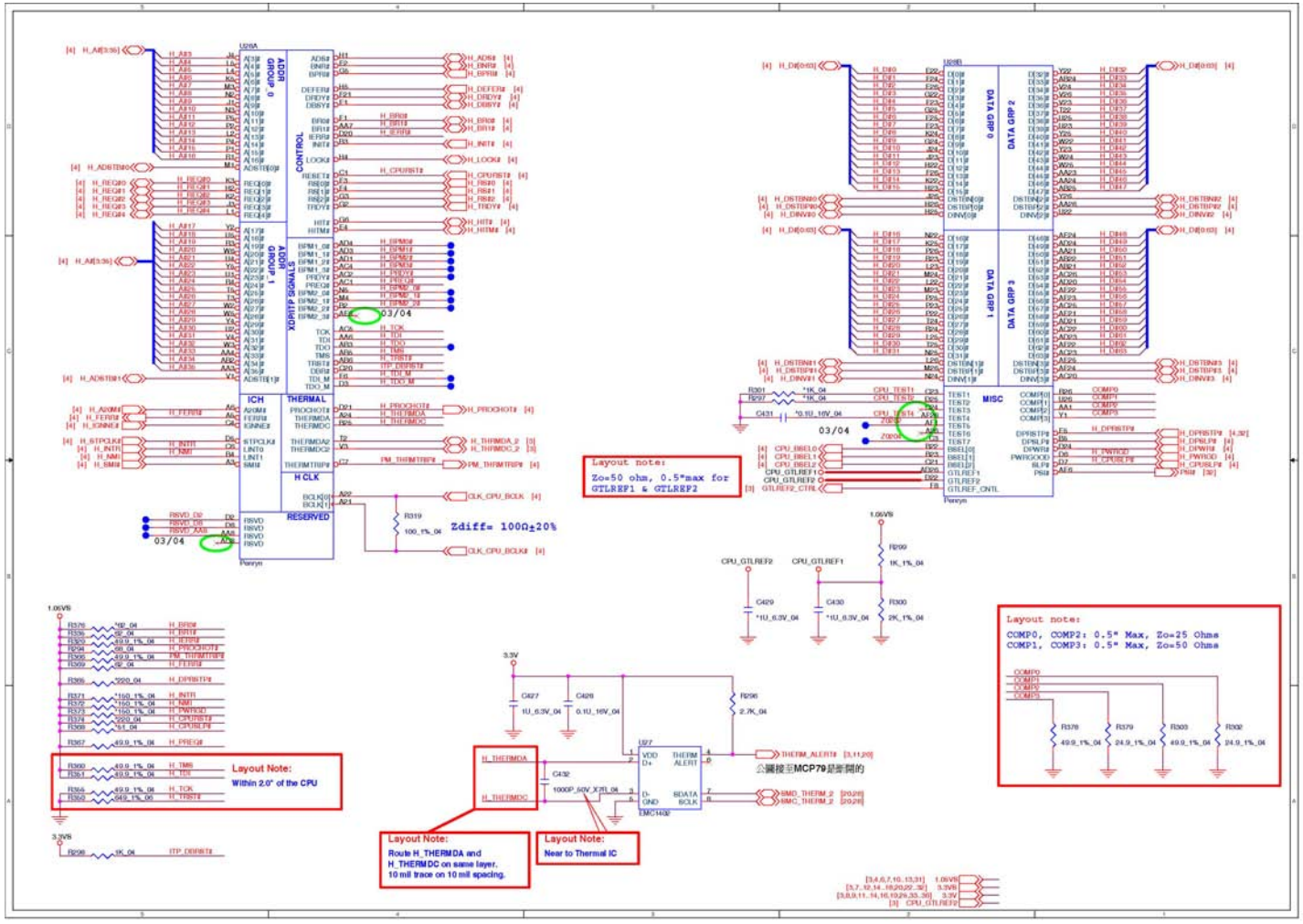

Sheet 2 of 53
PENRYN 1/2

B.Schematic Diagrams

PENRYN3 2/2

Sheet 3 of 53
PENRYN 2/2

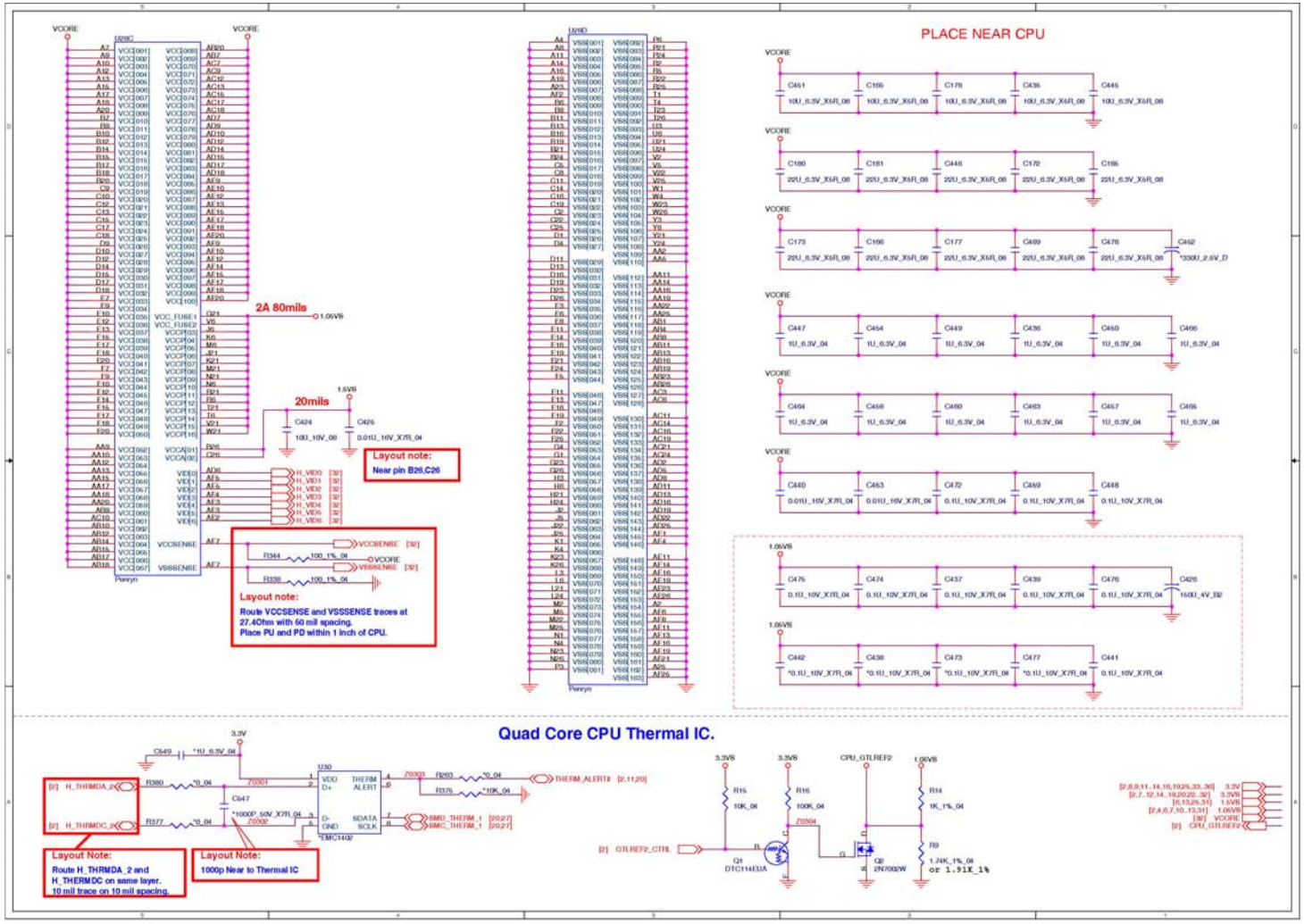

MCP79 FSBI

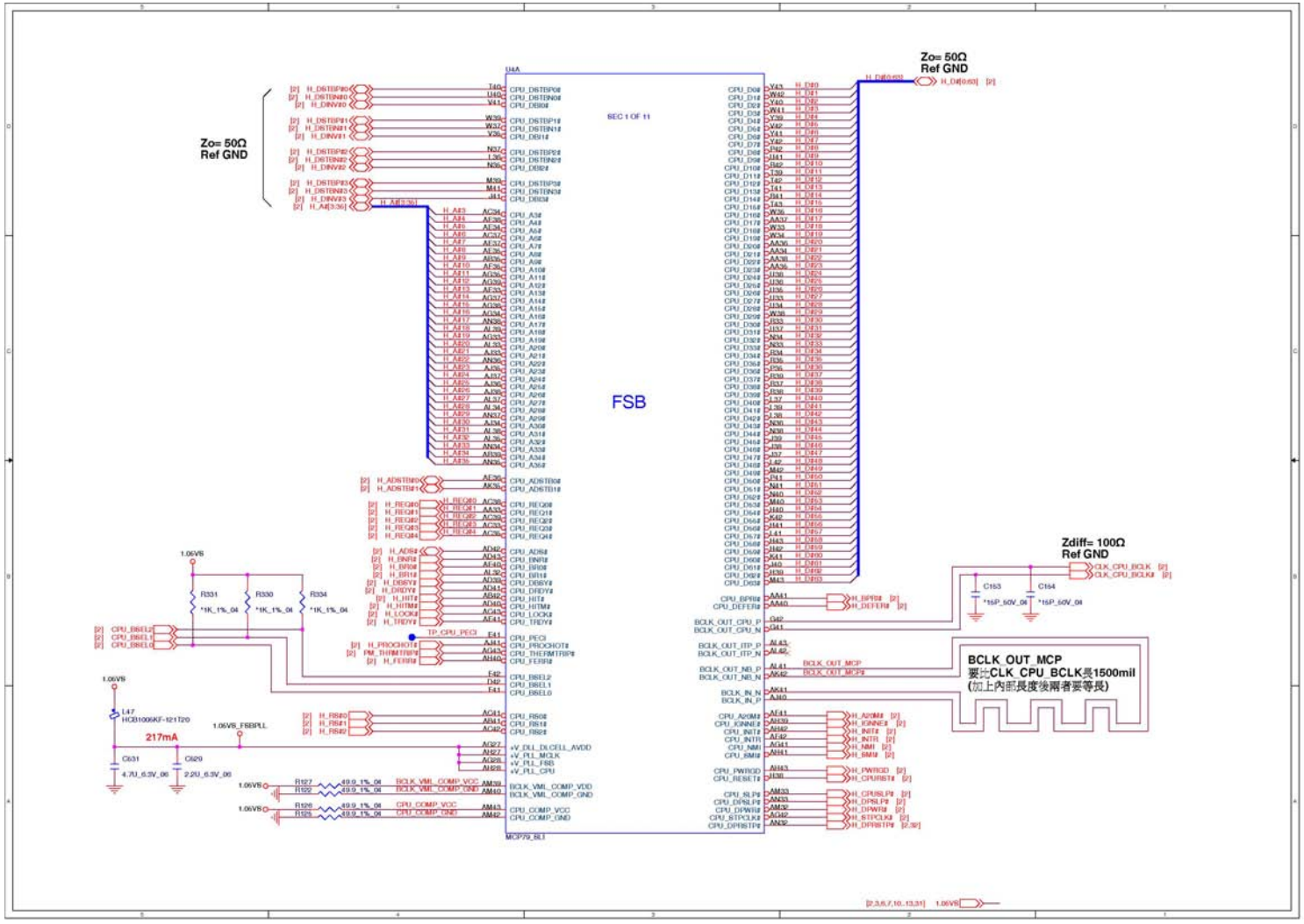

Sheet 4 of 53
MCP79 FSB

MCP79 MEM CTRL (1)

Sheet 5 of 53
MCP79 MEM CRTL (1)

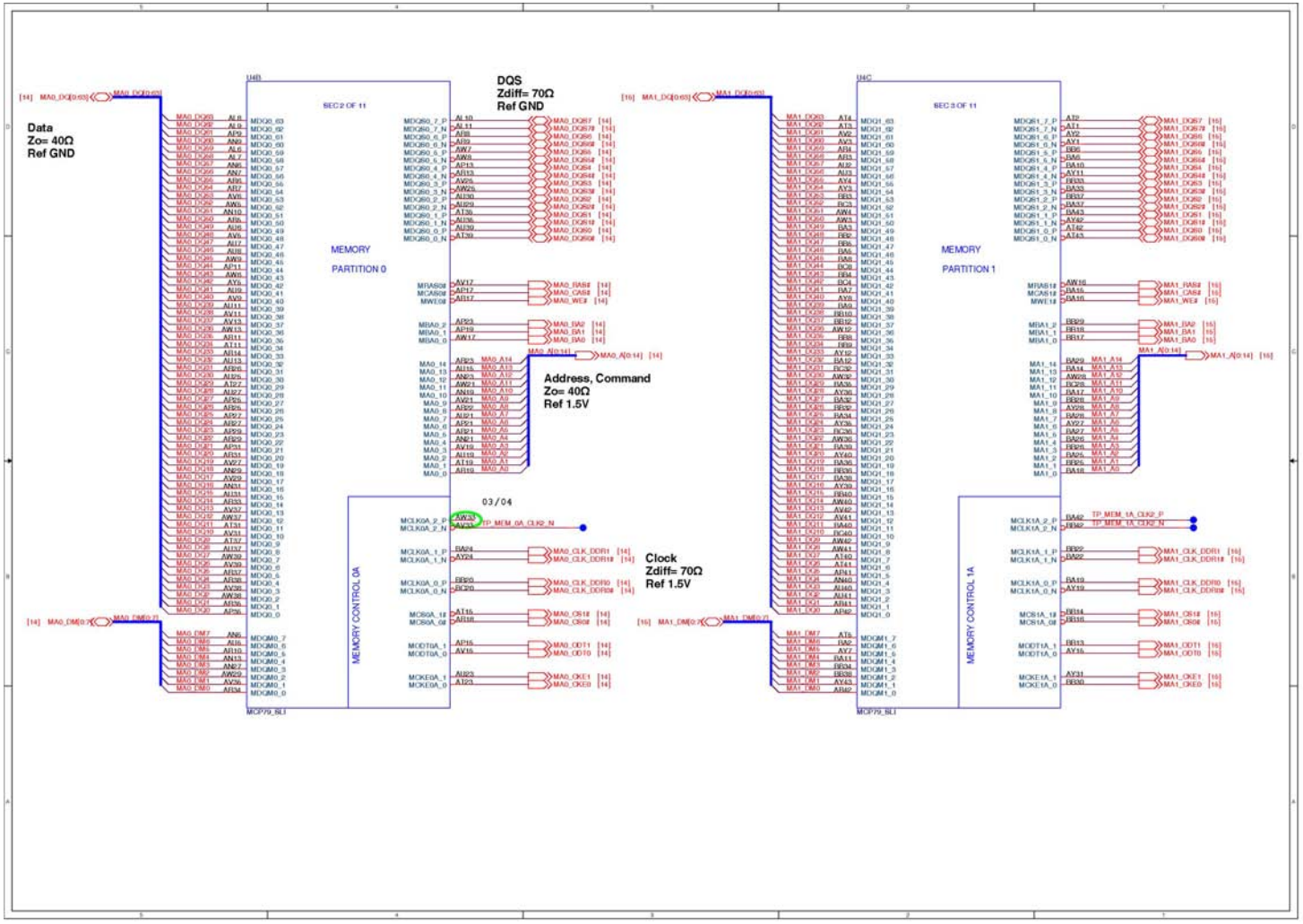

MCP79 MEM CTRL (2)

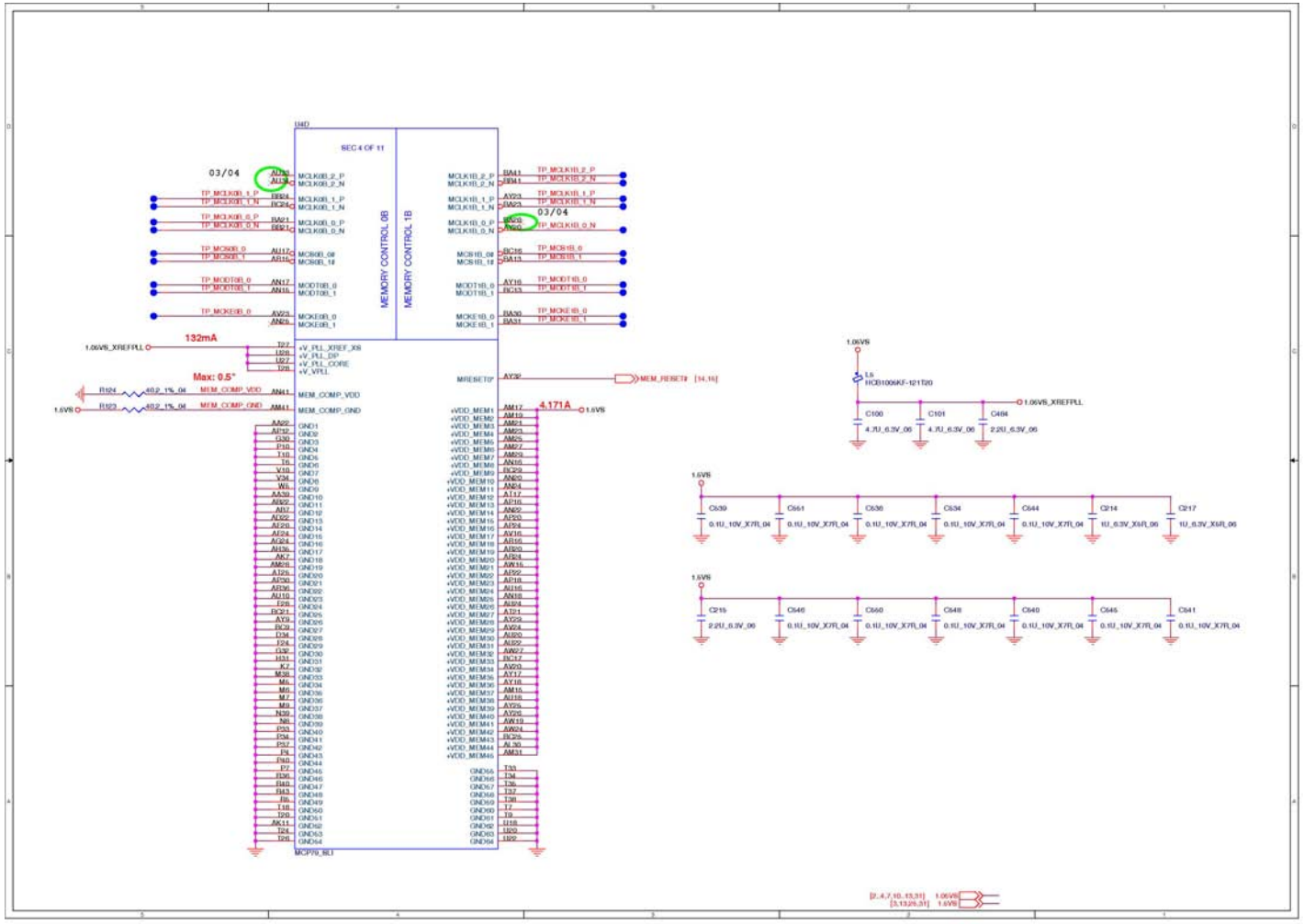

Sheet 6 of 53
MCP79 MEM CRTL
(2)

MCP79 PCI-E

Sheet 7 of 53
MCP79 PCI-E

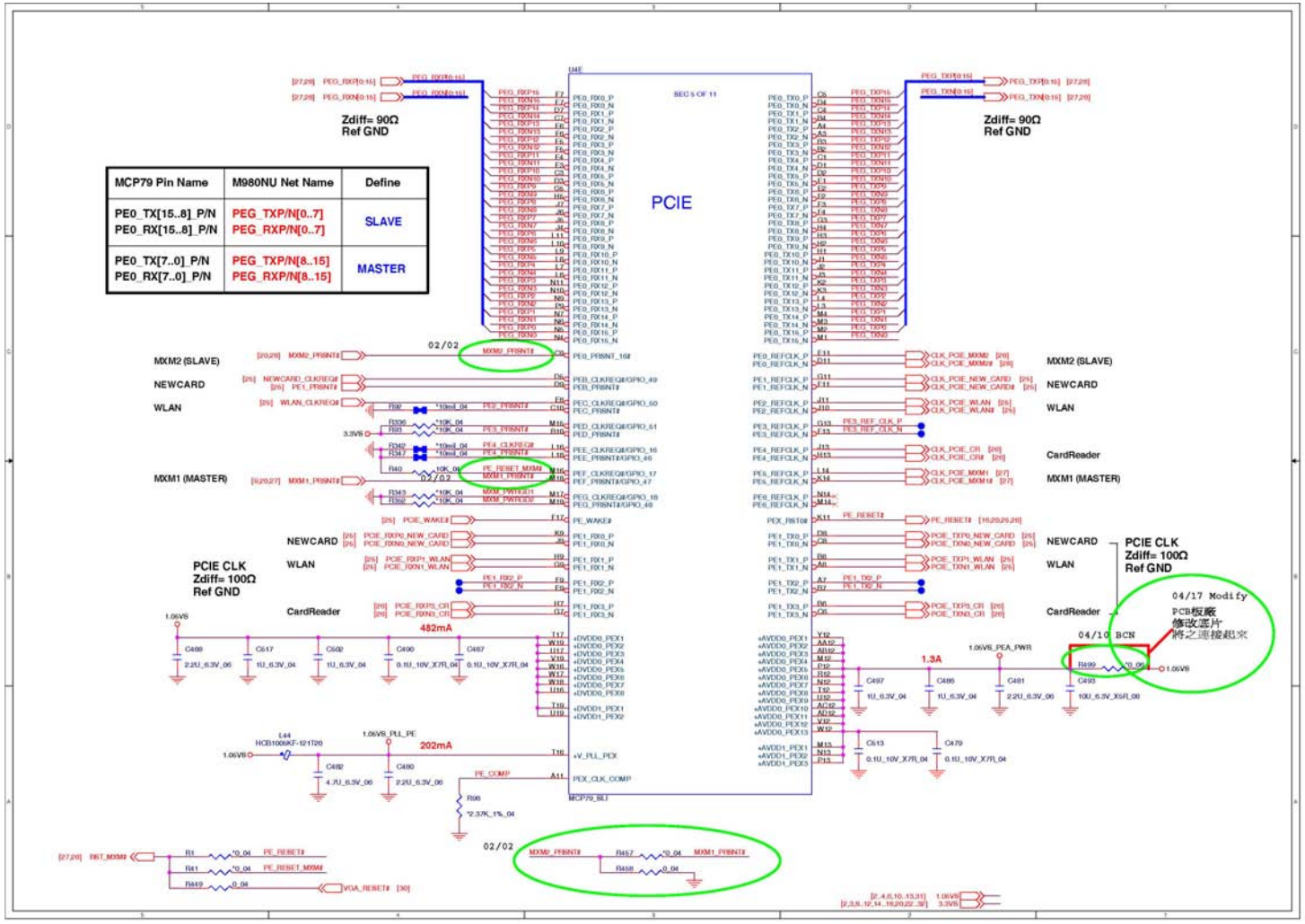

MCP79 Pin Name	M980NU Net Name	Define
PE0_TX[15..8]_P/N PE0_RX[15..8]_P/N	PEG_TXP/N[0..7] PEG_RXP/N[0..7]	SLAVE
PE0_TX[7..0]_P/N PE0_RX[7..0]_P/N	PEG_TXP/N[8..15] PEG_RXP/N[8..15]	MASTER

MCP79 LAN, Panel

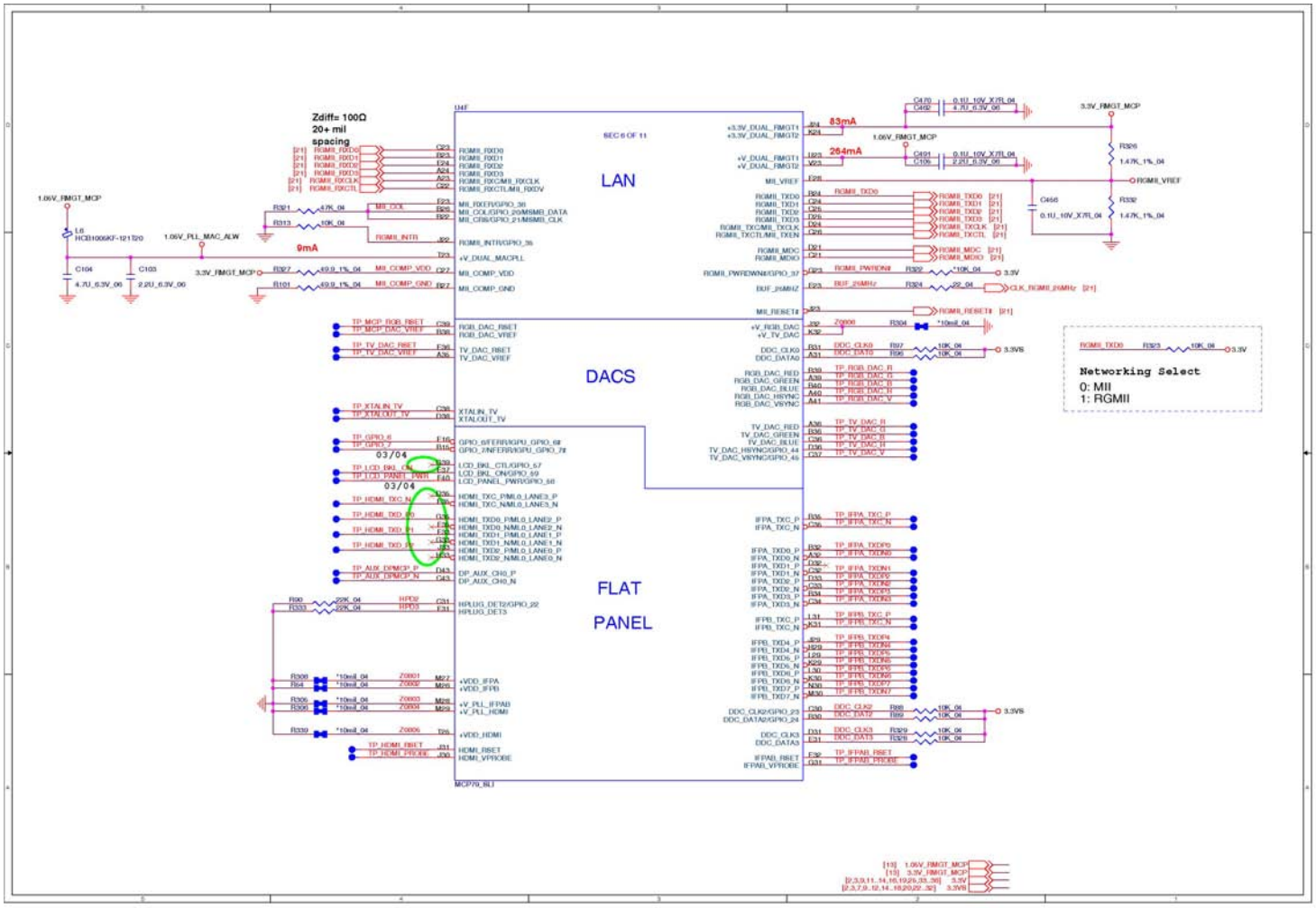

Sheet 8 of 53
MCP79 LAN, Panel

MCP79 PCI, LPC

Sheet 9 of 53
MCP79 PCI, LPC

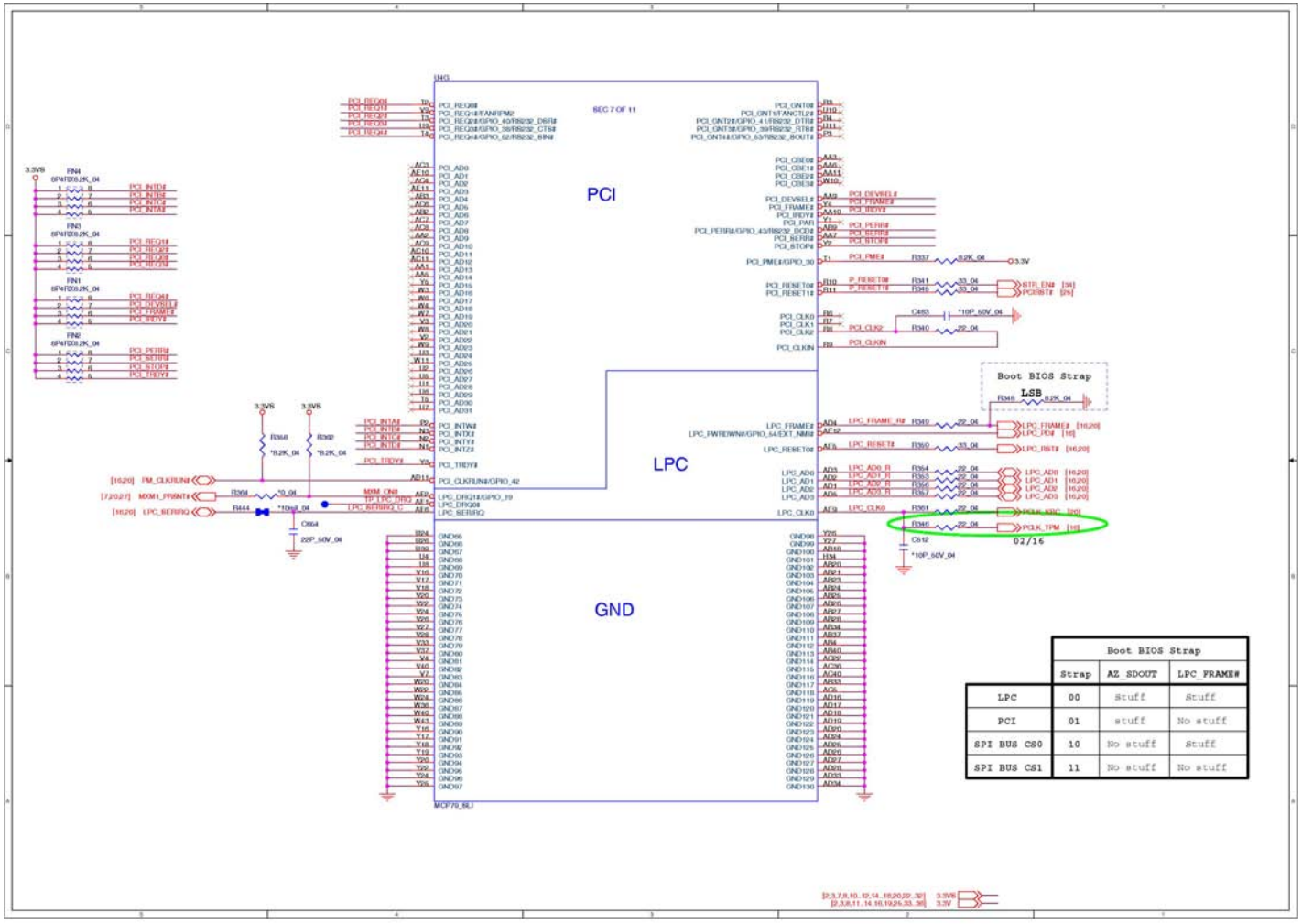

	Boot BIOS Strap		
	Strap	AZ_SDOUT	LPC_FRAME#
LPC	00	Stuff	Stuff
PCI	01	stuff	No stuff
SPI BUS CS0	10	No stuff	Stuff
SPI BUS CS1	11	No stuff	No stuff

MCP79 SATA, USB

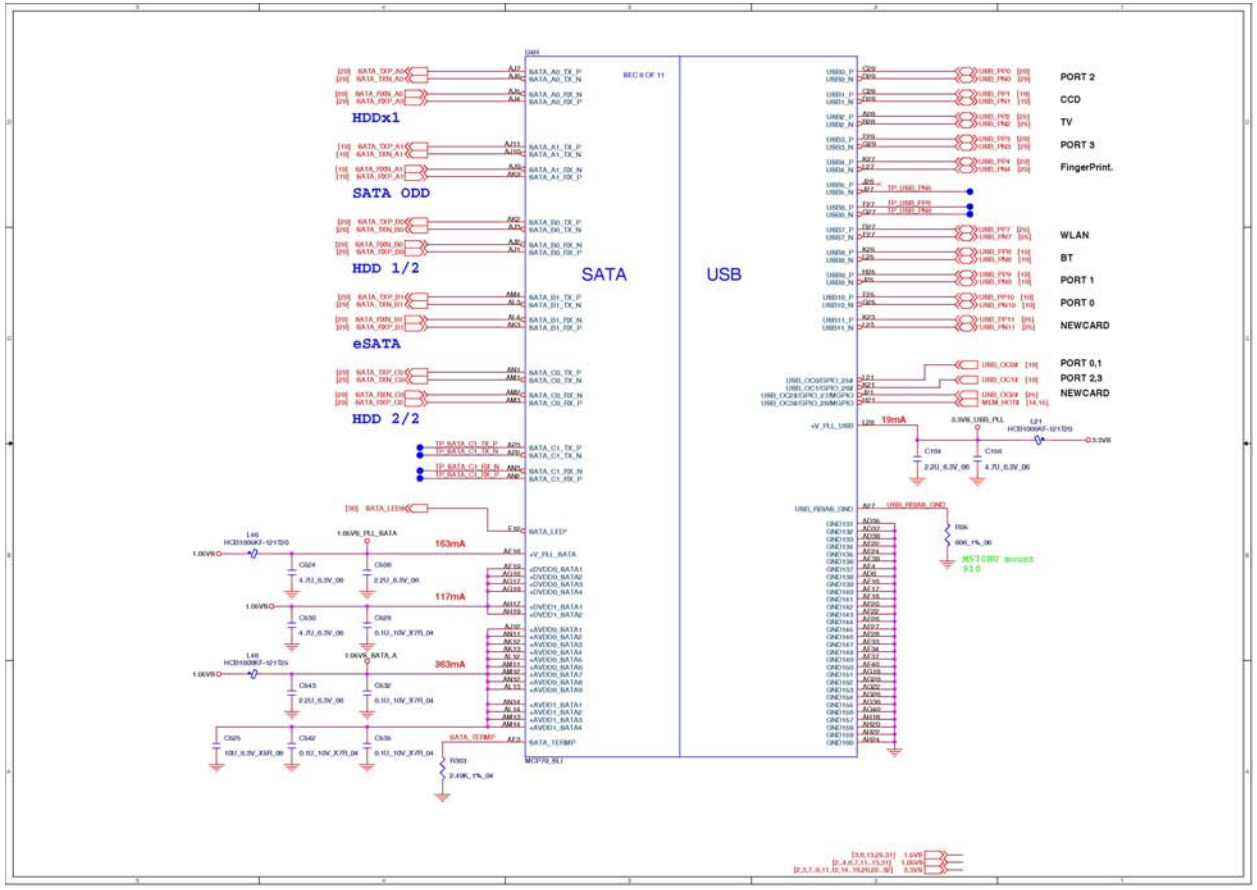

Sheet 10 of 53
MCP79 SATA, USB

MCP79 HDA, Misc

Sheet 11 of 53
MCP79 HDA, Misc

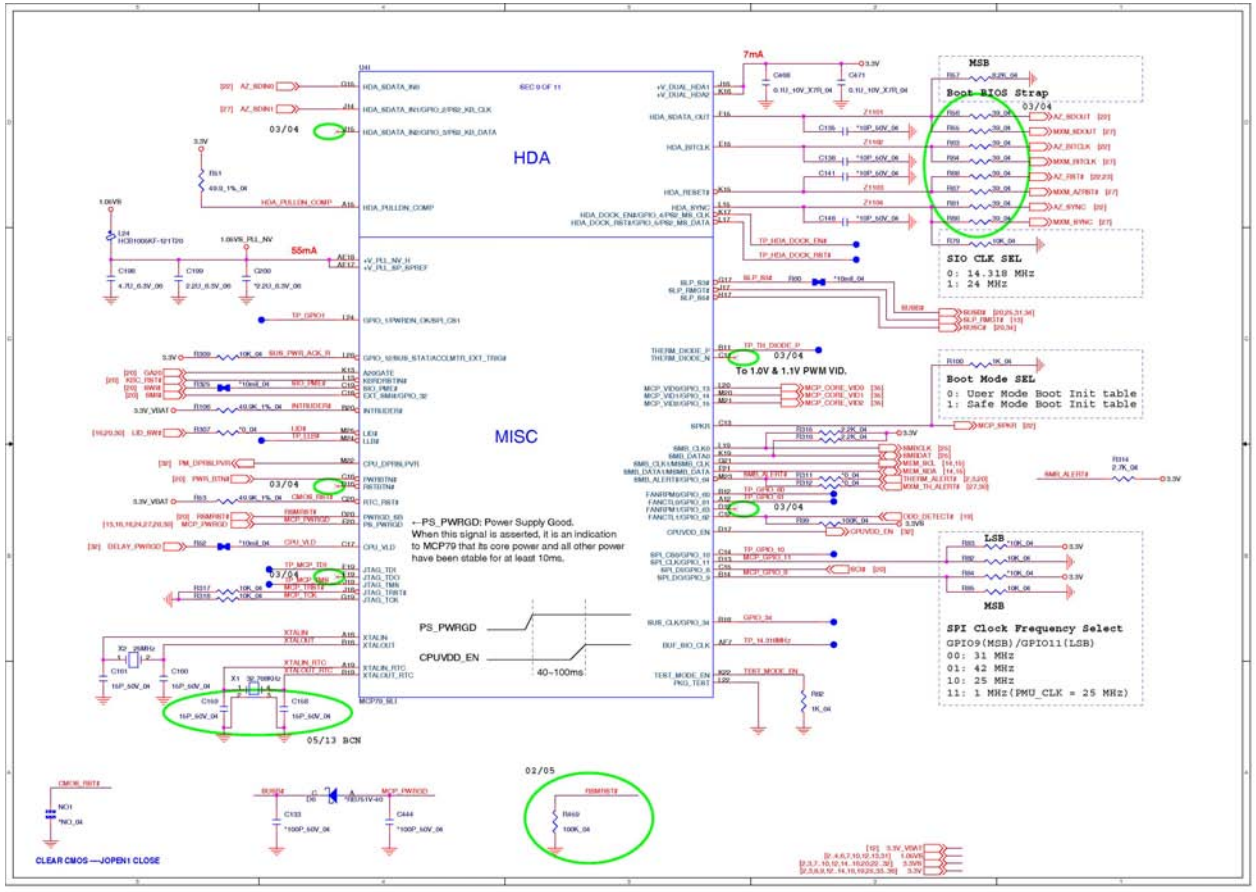

MCP79 Power

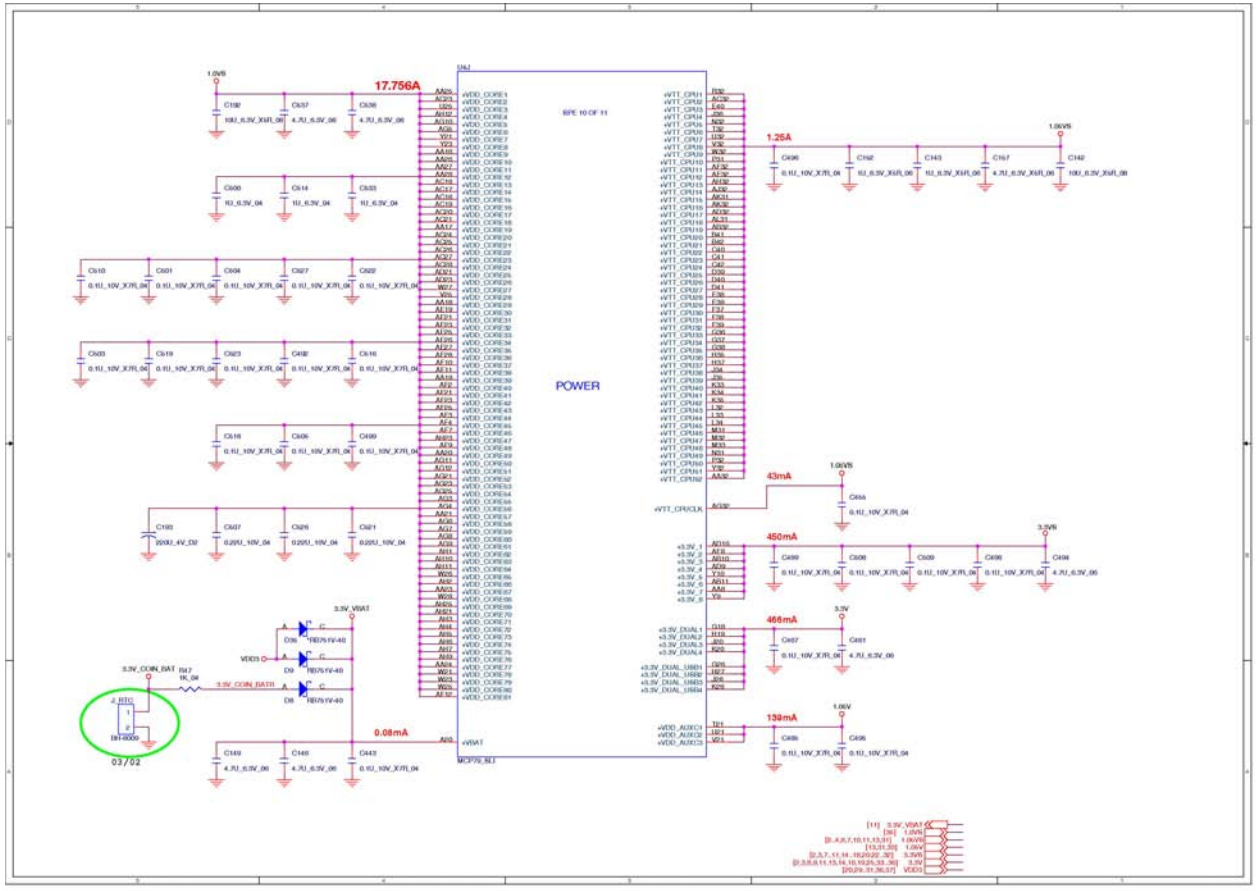

Sheet 12 of 53
MCP79 Power

MCP79 GND, RMGT PWR, PWRGD

Sheet 13 of 53
MCP79 GND, RMGT PWR, PWRGD

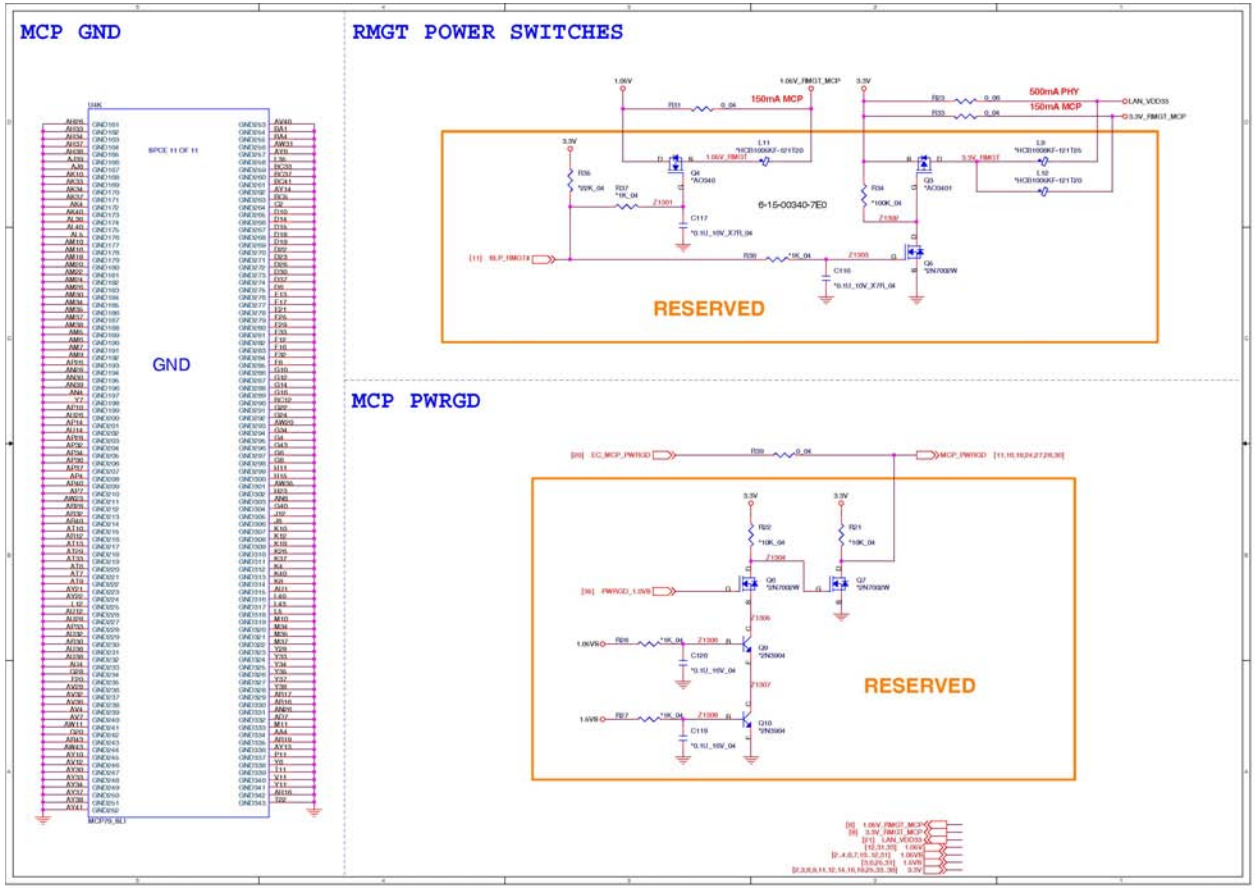

DDR3 SO-DIMM_0

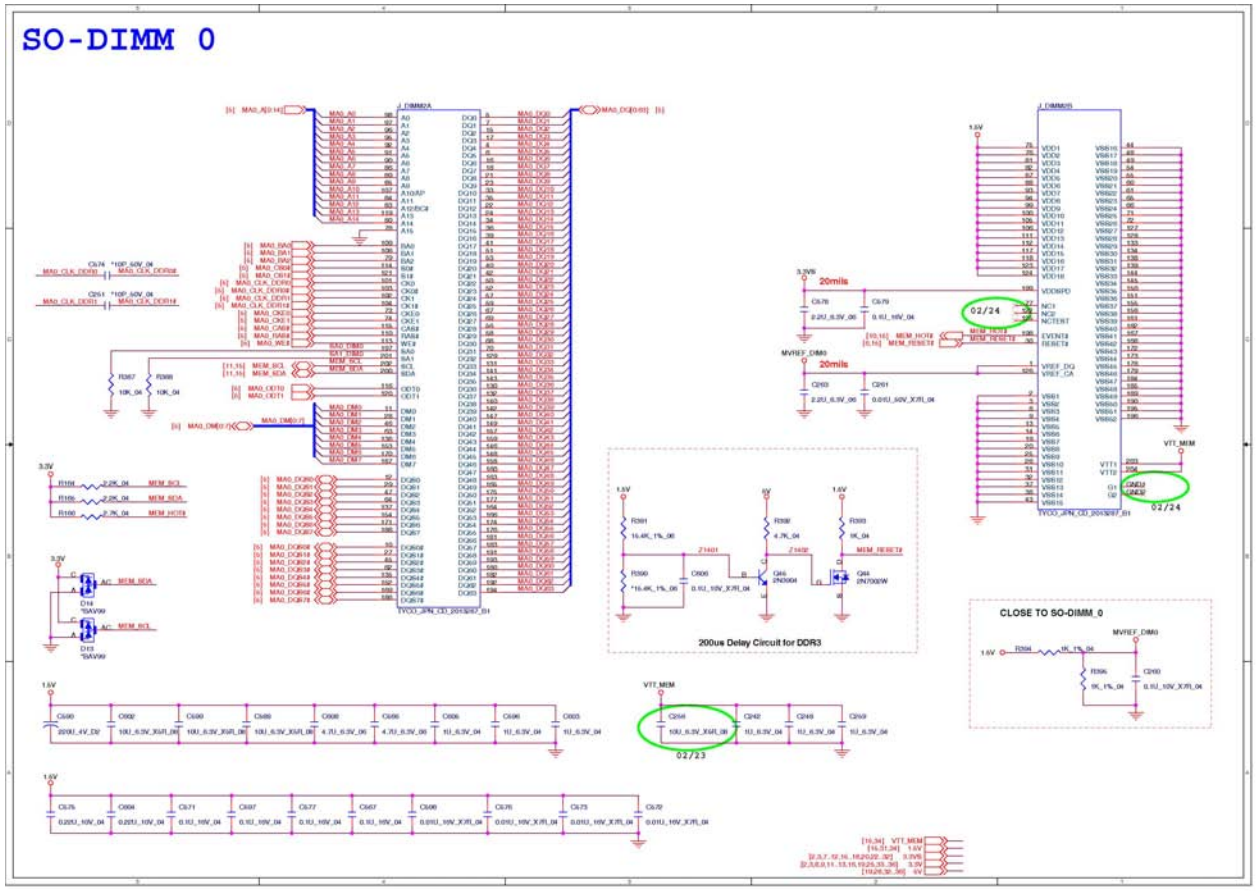

Sheet 14 of 53
DDR3 SO-DIMM_0

DDR SO-DIMM_1

Sheet 15 of 53
DDR3 SO-DIMM_1

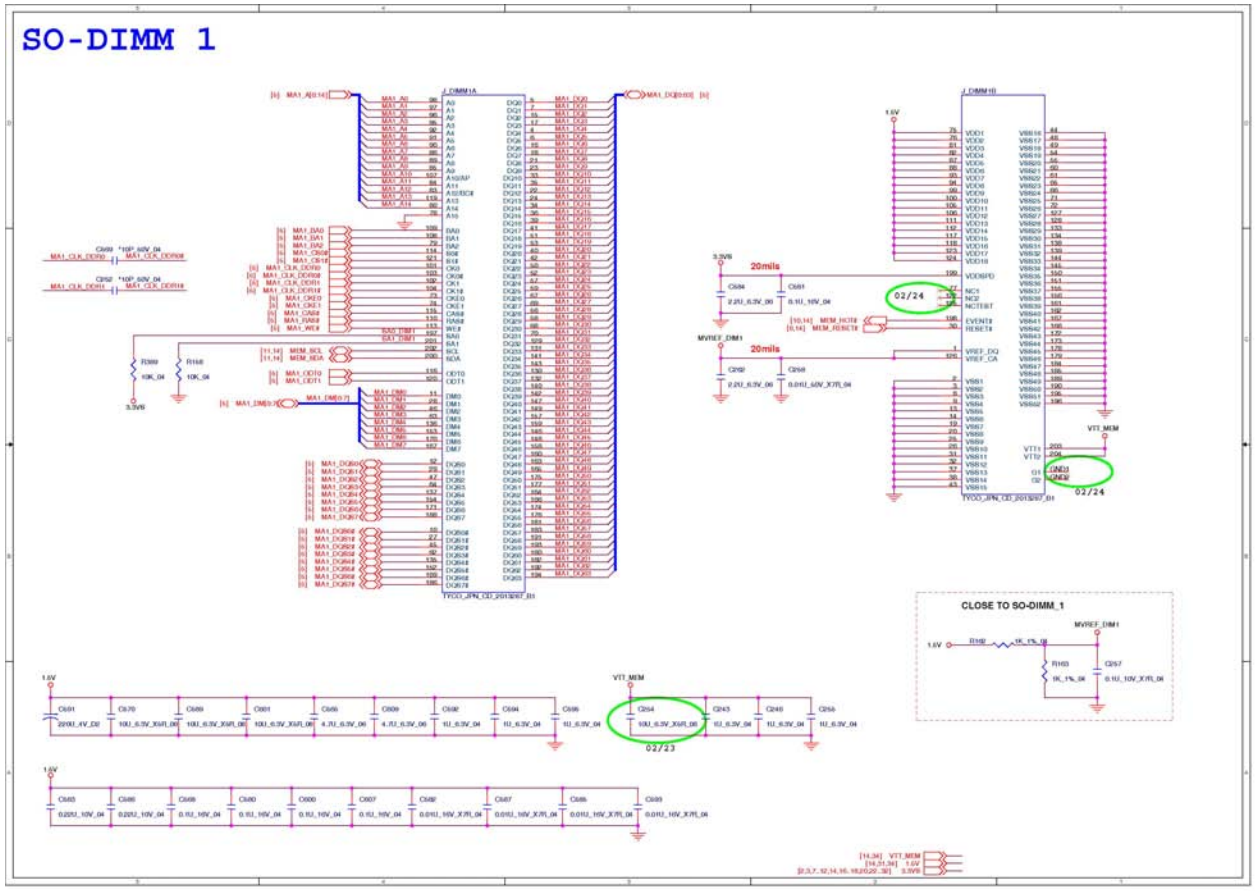

Panel, Inverter, TPM

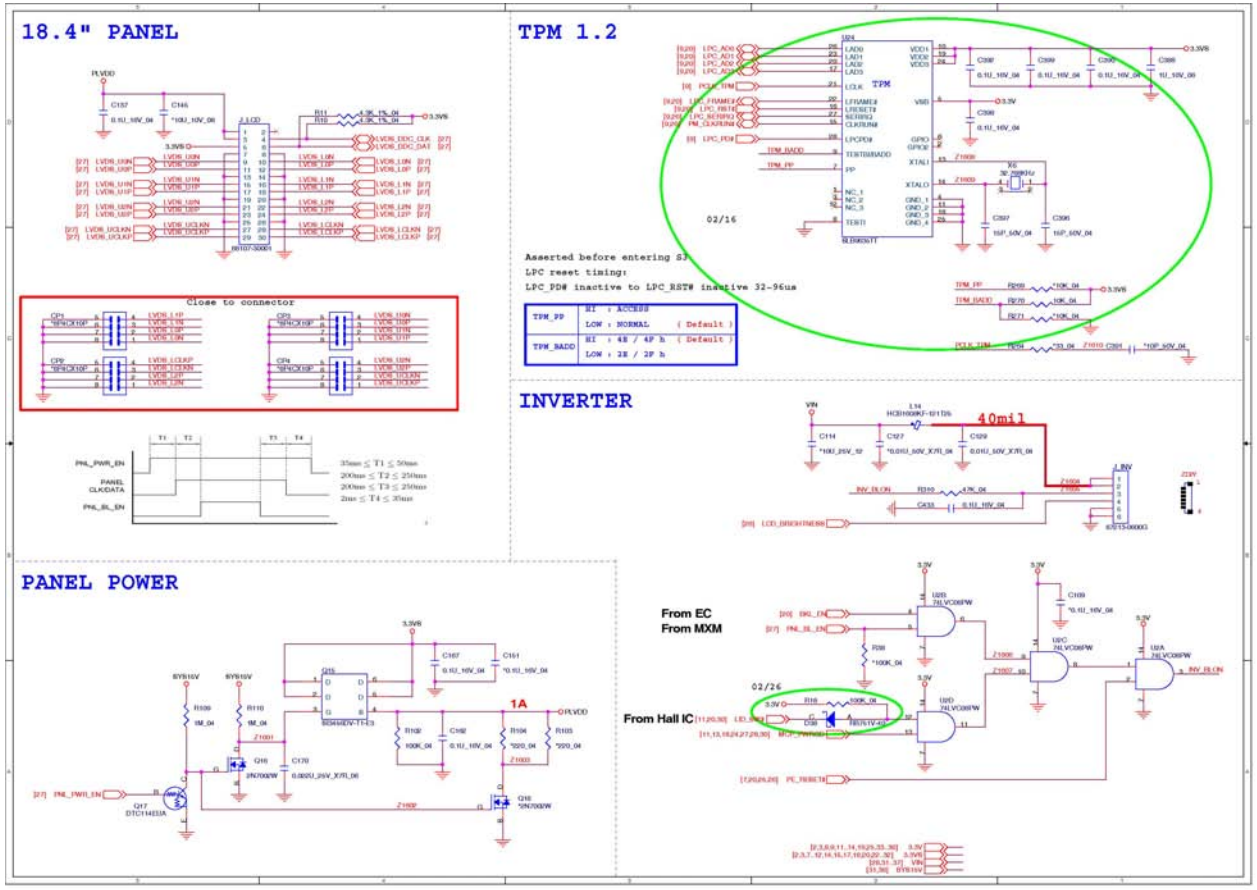

Sheet 16 of 53
Panel, Inverter, TPM

HDMI, Fan Control

Sheet 17 of 53
HDMI, Fan Control

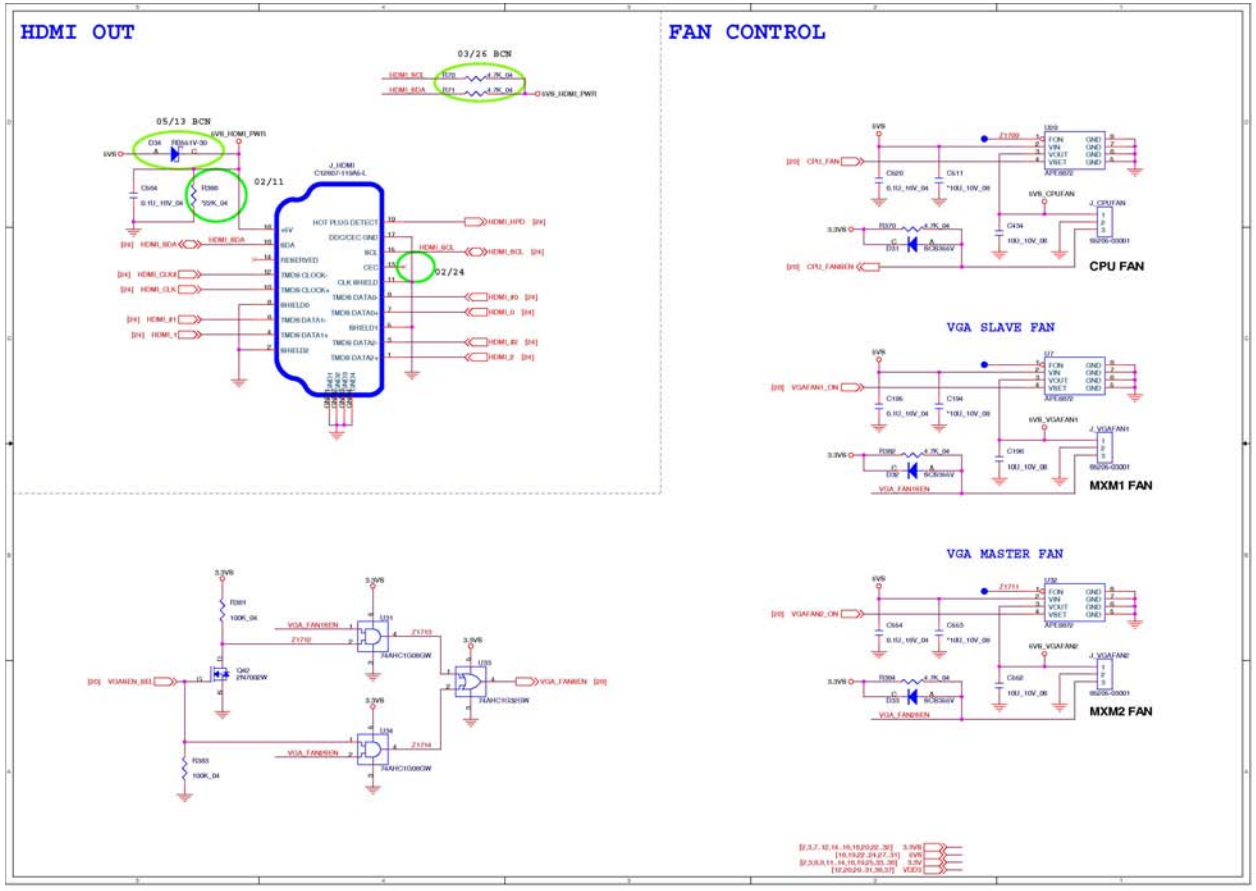

CRT, DVI

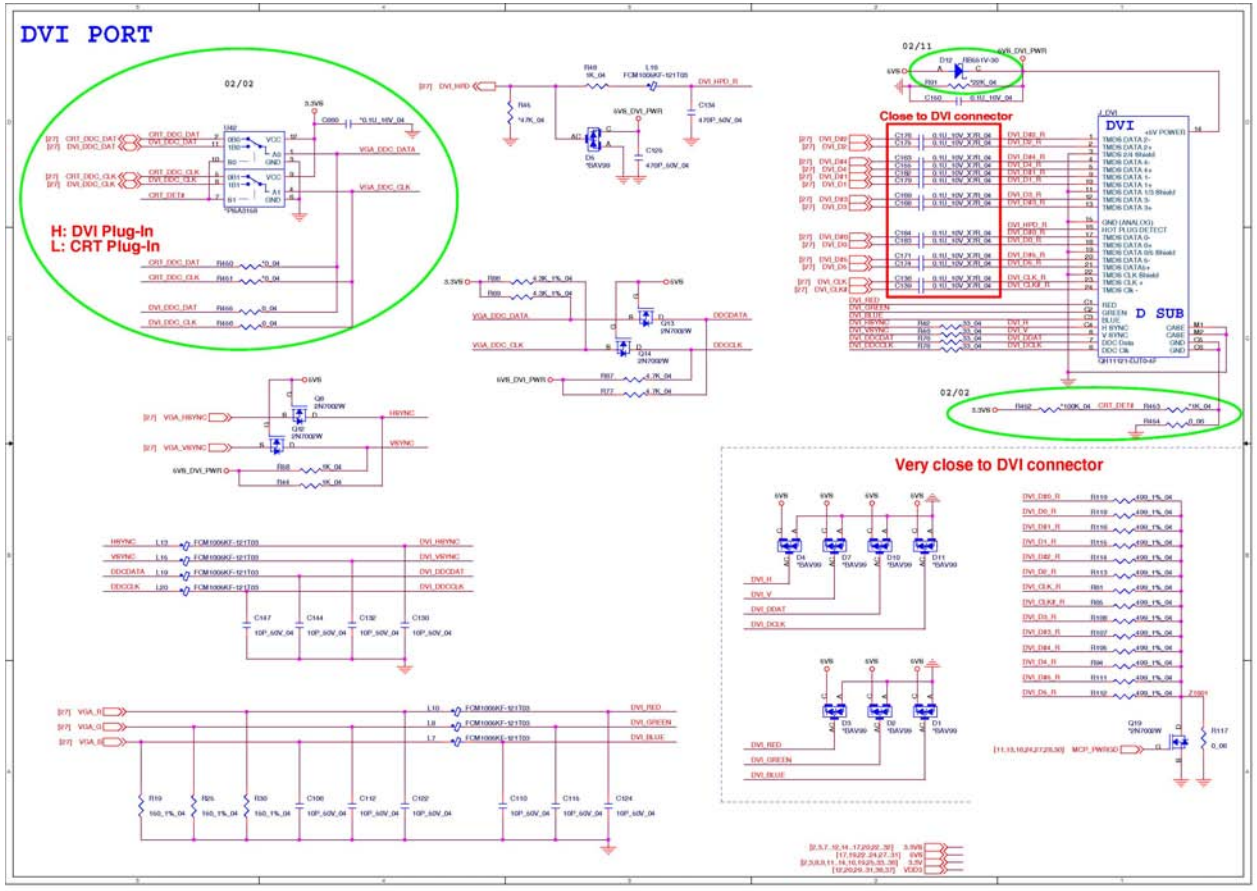

Sheet 18 of 53
CRT, DVI

ODD, CCD, BT, USB 2.0

Sheet 19 of 53
ODD, CCD, BT, USB 2.0

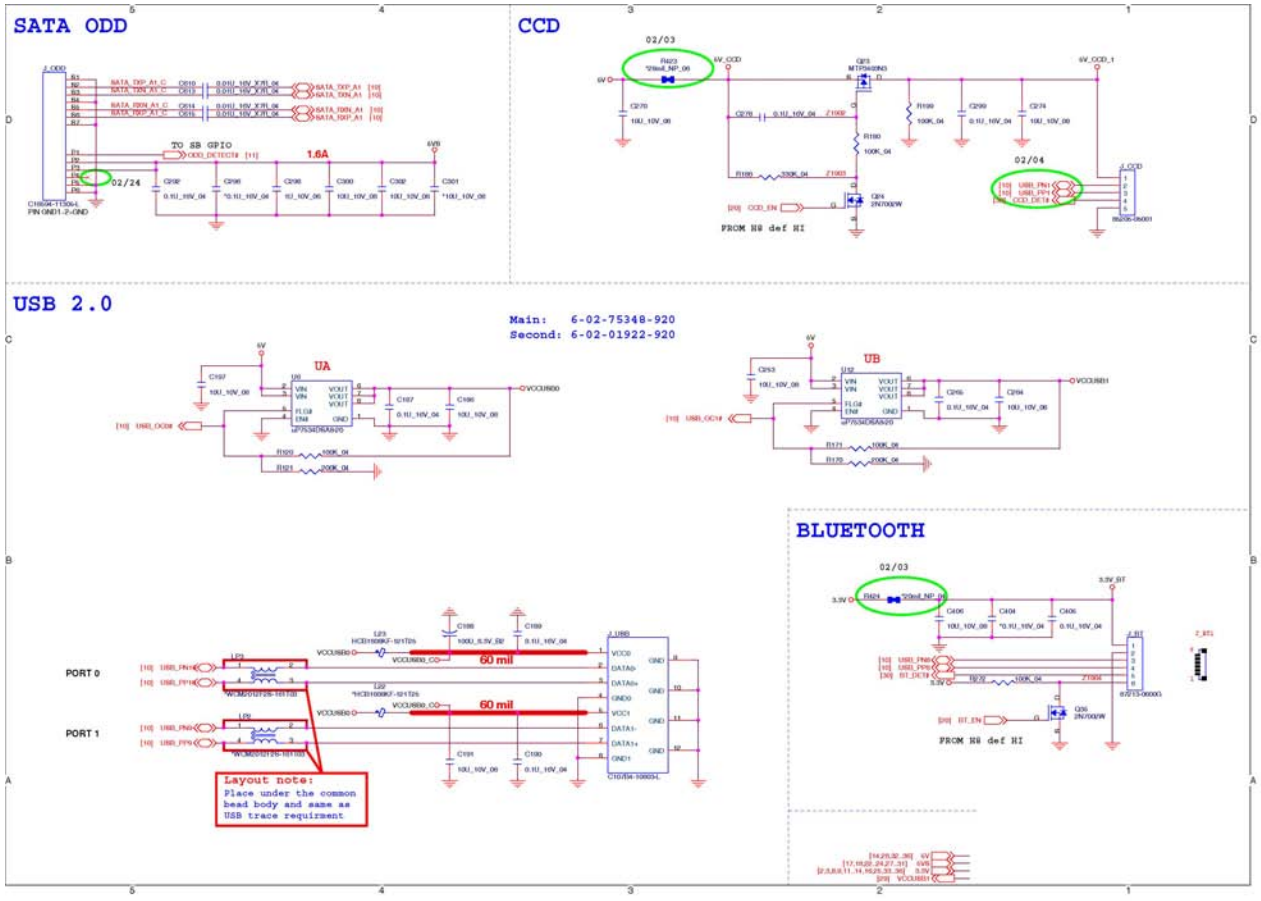

KBC ITE IT8512-J

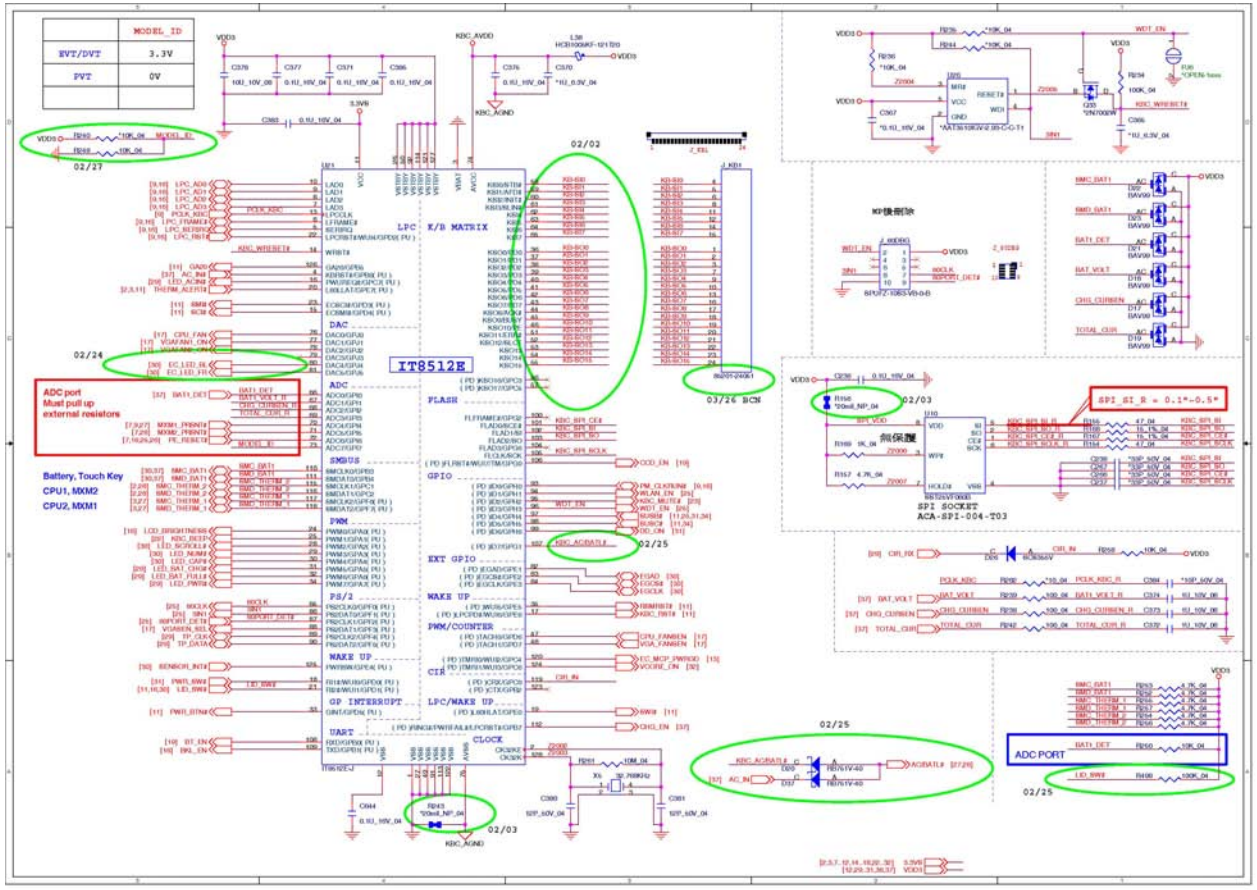

Sheet 20 of 53
KBC ITE IT8512-J

PHY RTL8211CL

Sheet 21 of 53
PHY RTL8211CL

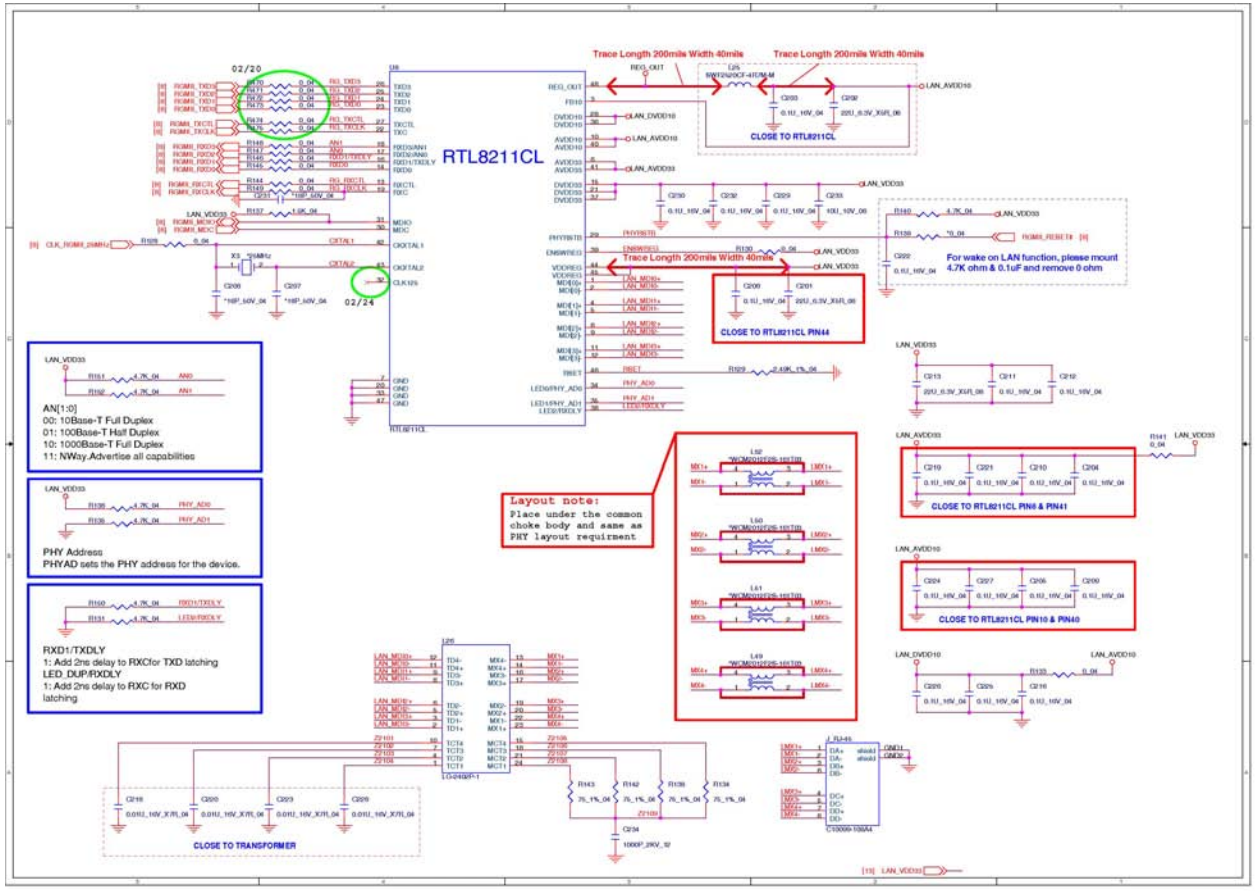

Codec, Subwoofer, DMIC

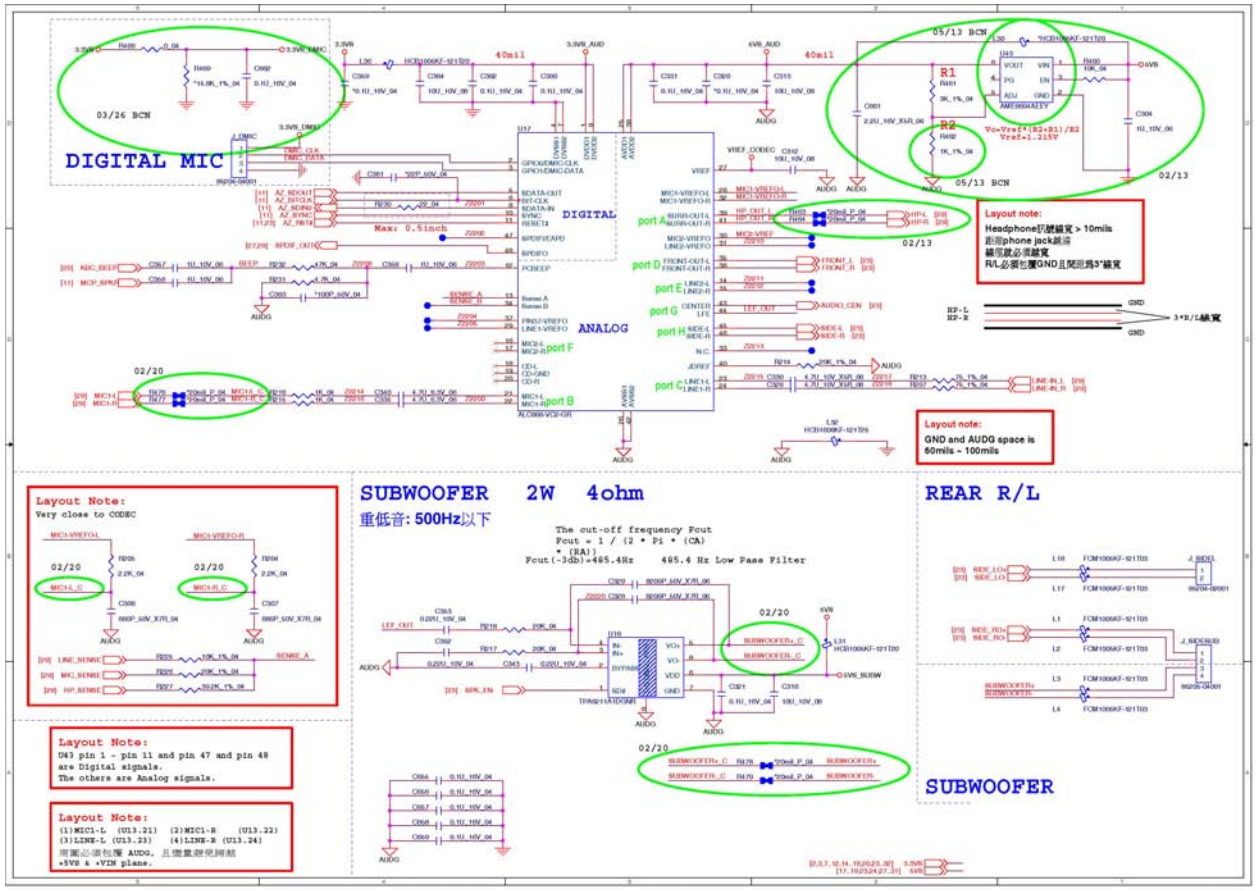

Sheet 22 of 53
Codec, Subwoofer, DMIC

Audio AMP

Sheet 23 of 53
Audio AMP

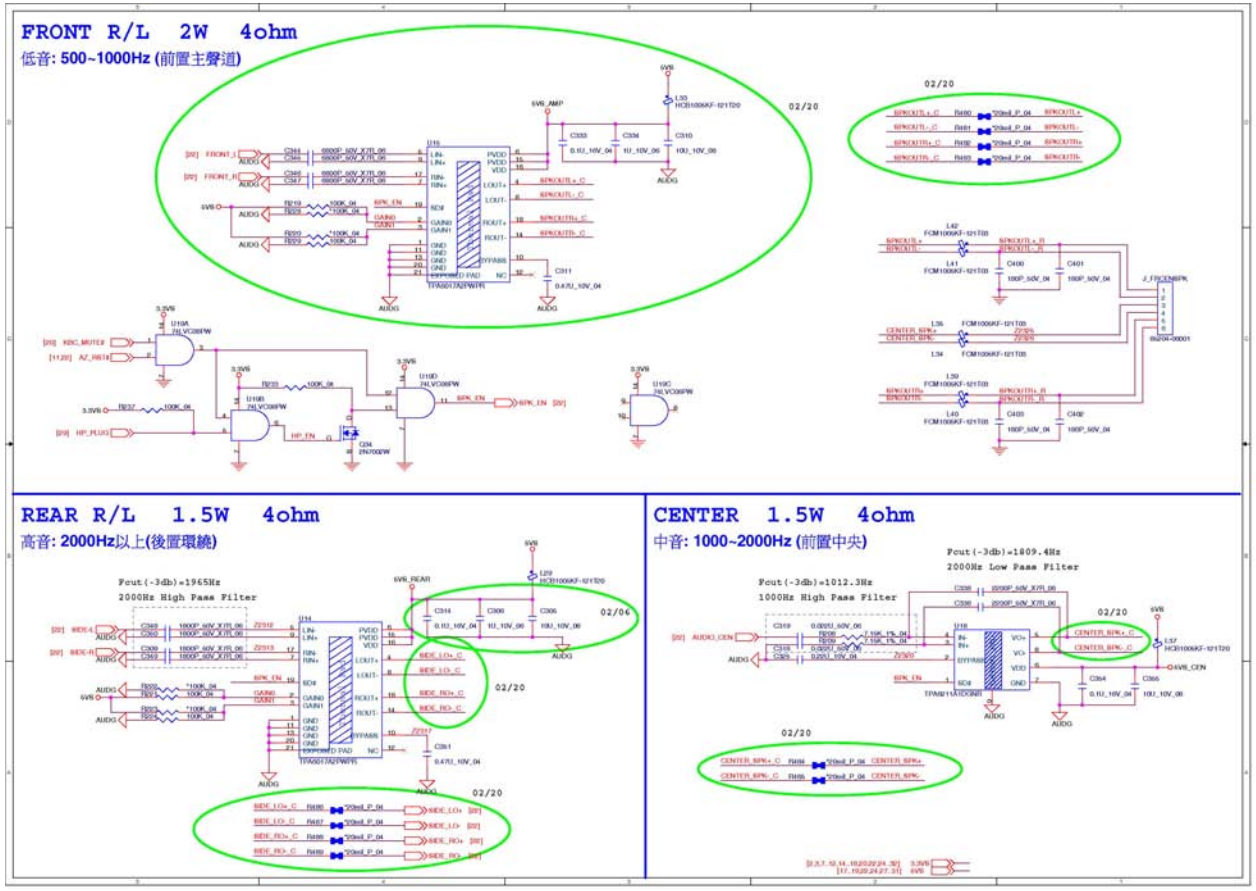

HDMI Switch

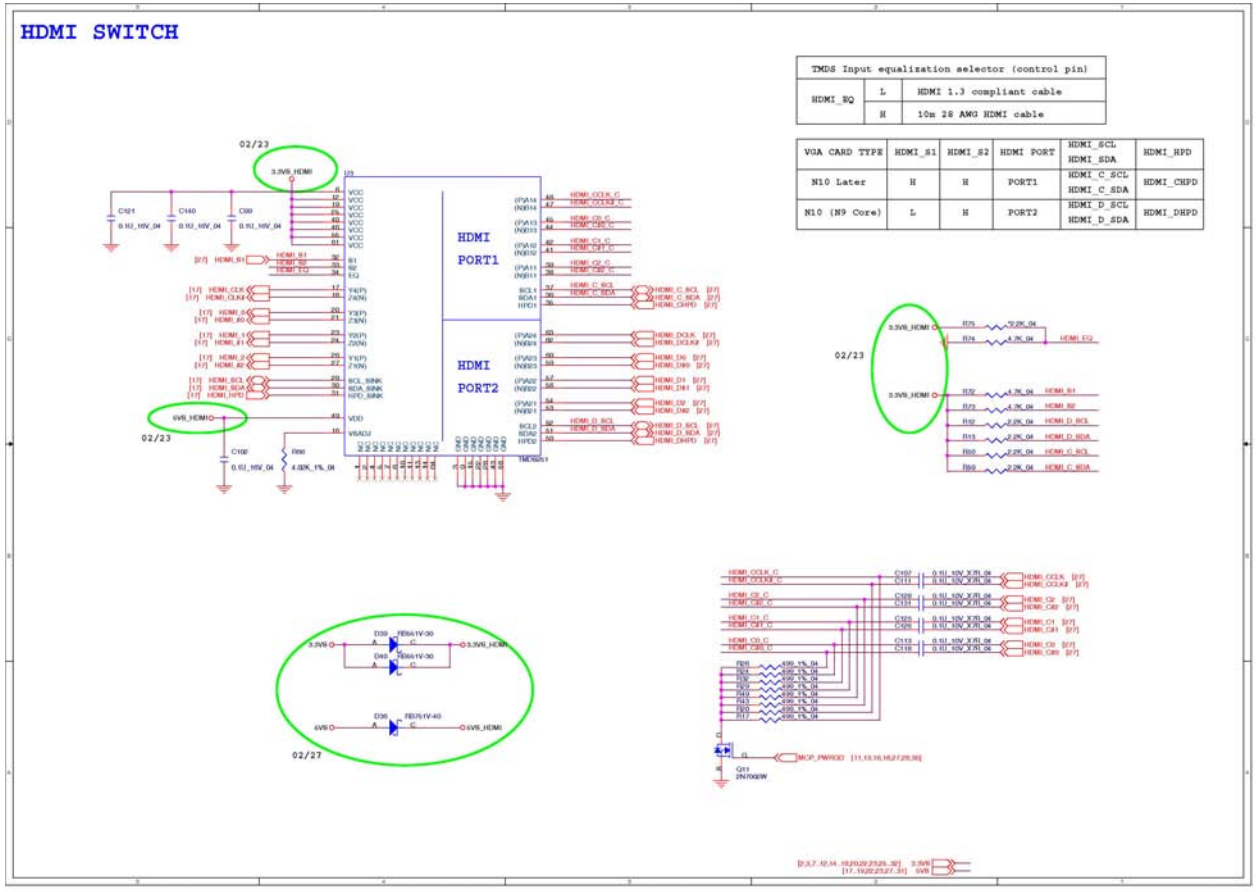

TMDS Input equalization selector (control pin)		
HDMI_EQ	L	HDMI 1.3 compliant cable
	H	10m 28 AWG HDMI cable

VGA CARD TYPE	HDMI_S1	HDMI_S2	HDMI PORT	HDMI_SCL HDMI_SDA	HDMI_HPD
N10 Later	H	H	PORT1	HDMI_C_SCL HDMI_C_SDA	HDMI_CHPD
N10 (N9 Core)	L	H	PORT2	HDMI_D_SCL HDMI_D_SDA	HDMI_DHPD

Sheet 24 of 53
HDMI Switch

New Card, Mini Card

Sheet 25 of 53
New Card, Mini Card

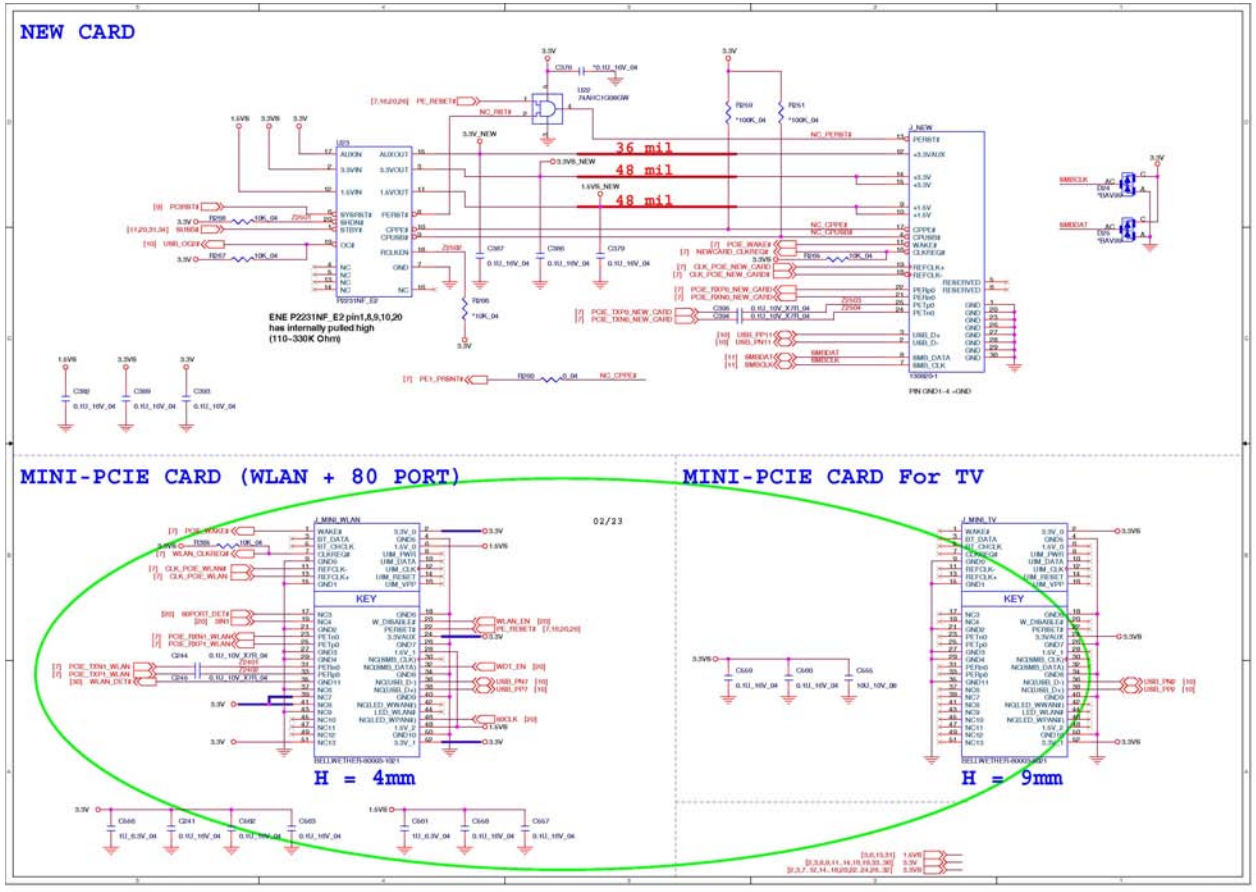

Card Reader, IEEE 1394

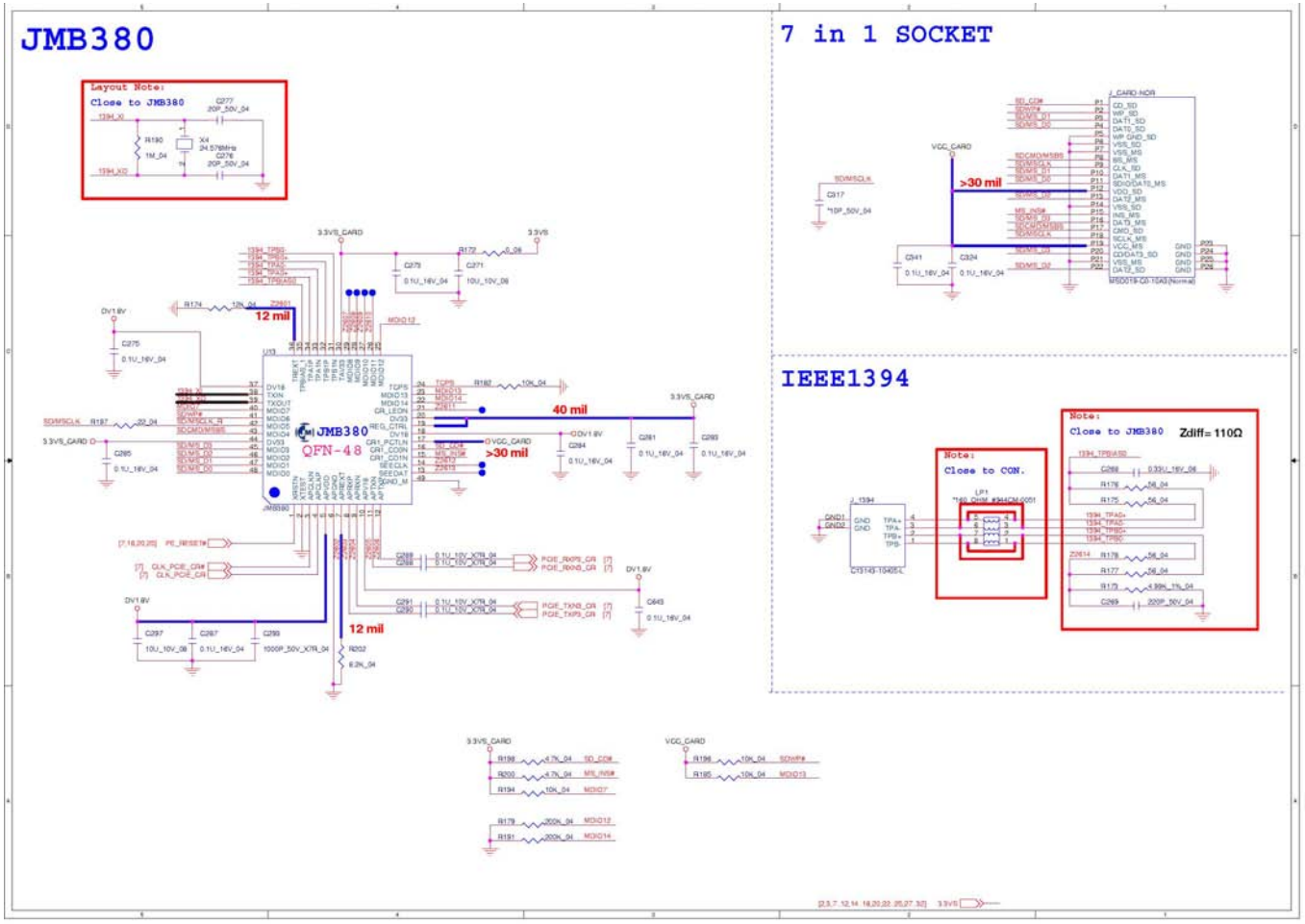

Sheet 26 of 53
Card Reader,
IEEE1394

MXM 3.0 Master

Sheet 27 of 53
MXM 3.0 Master

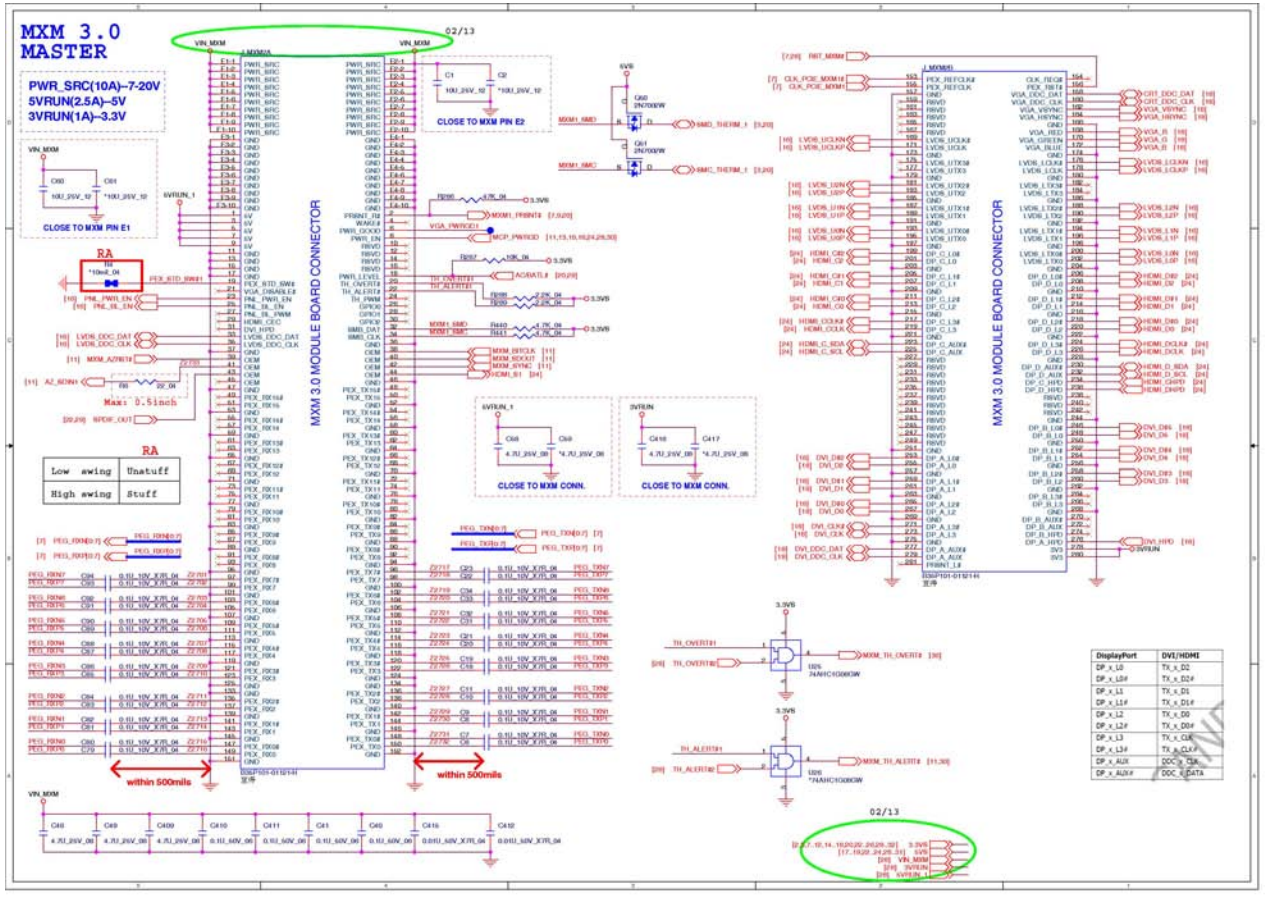

MXM 3.0 Slave

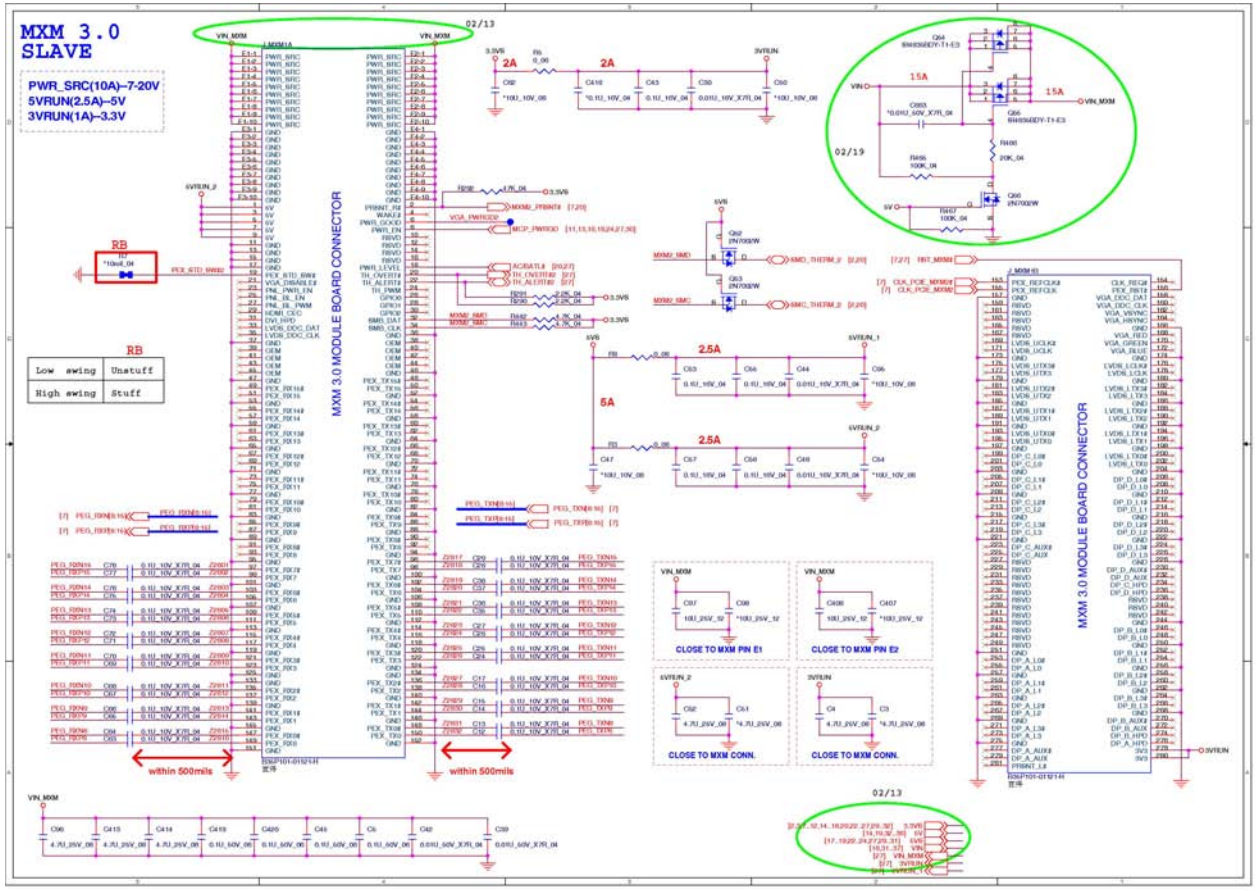

Sheet 28 of 53
MXM 3.0 Slave

MB to Small B'd Connector A

Sheet 29 of 53
MB to Small B'd Connector A

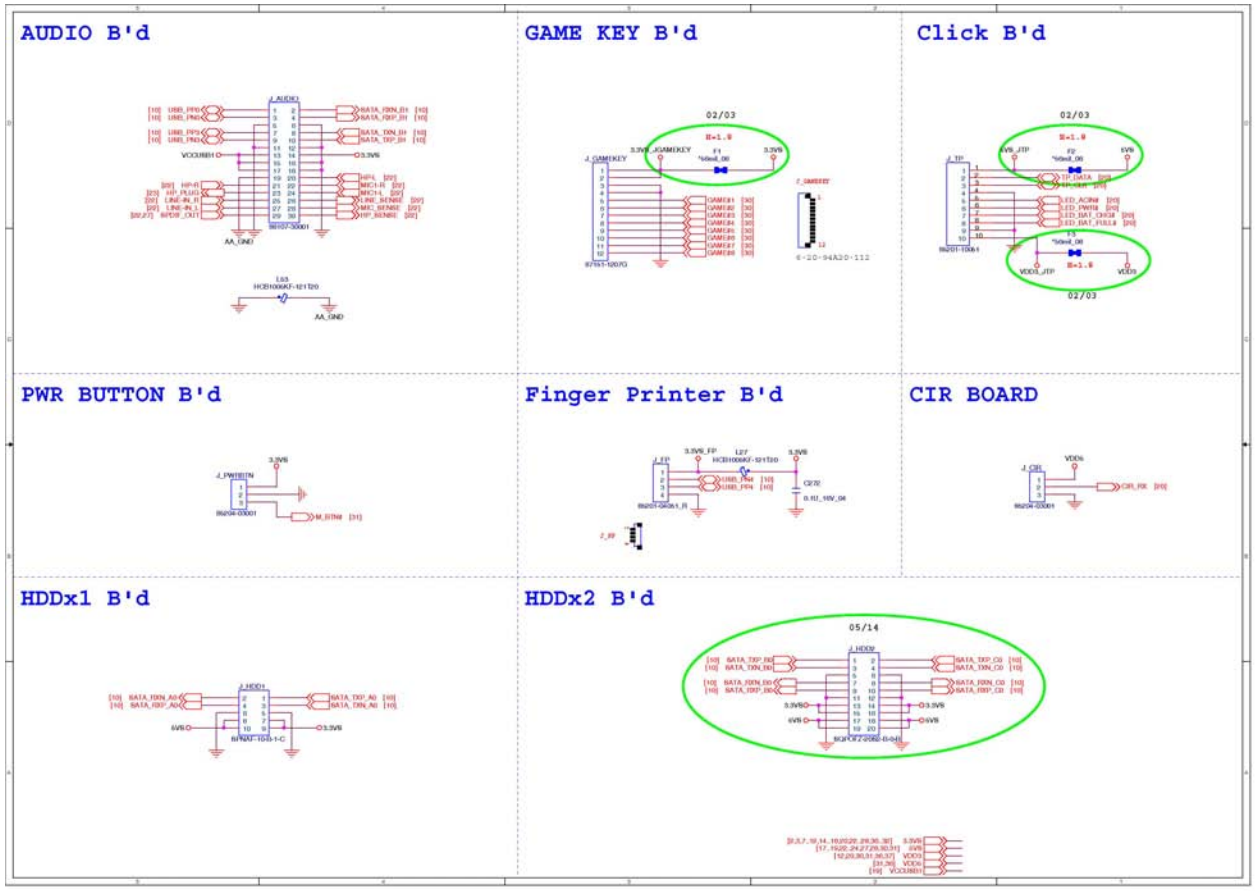

MB to Small B'd Connector B

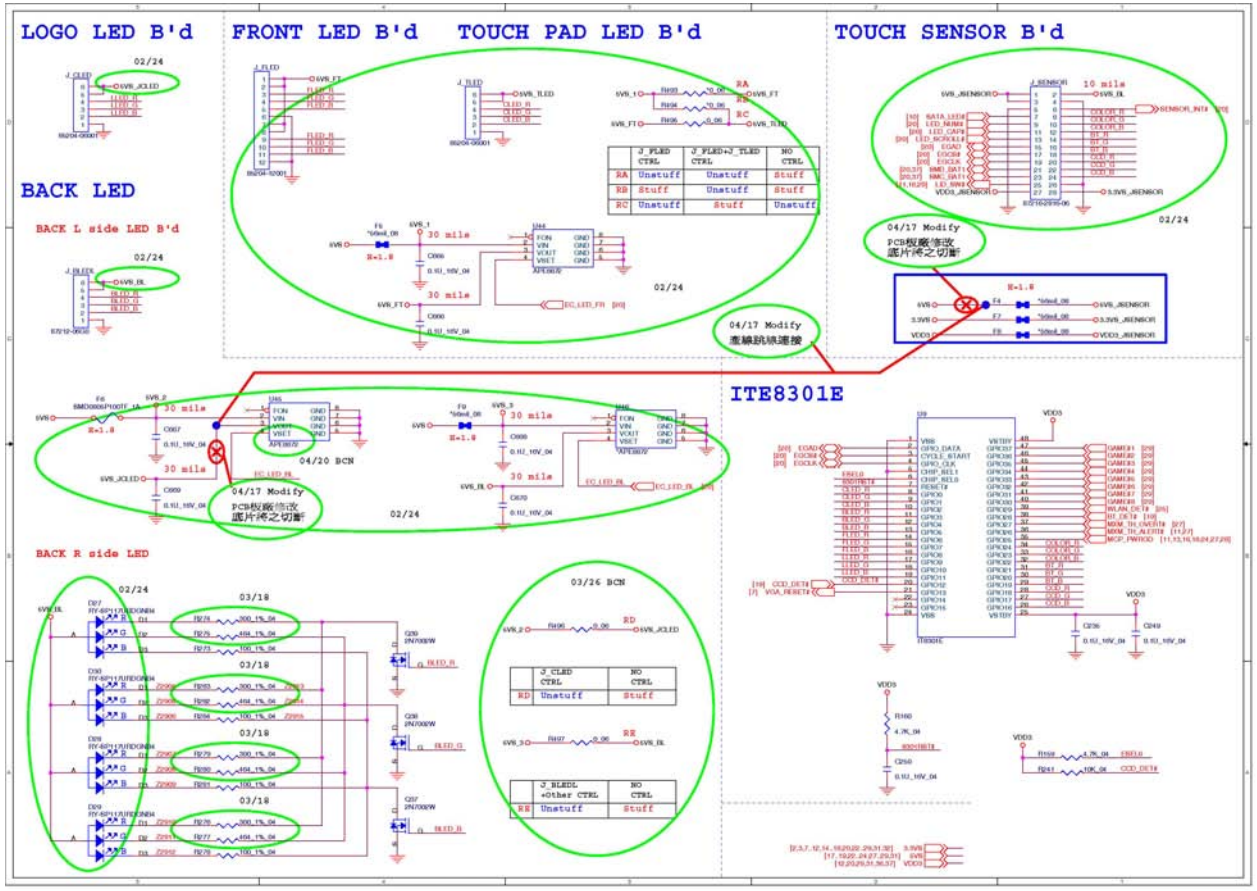

Sheet 30 of 53
MB to Small B'd
Connector B

Power System

Sheet 31 of 53
Power System

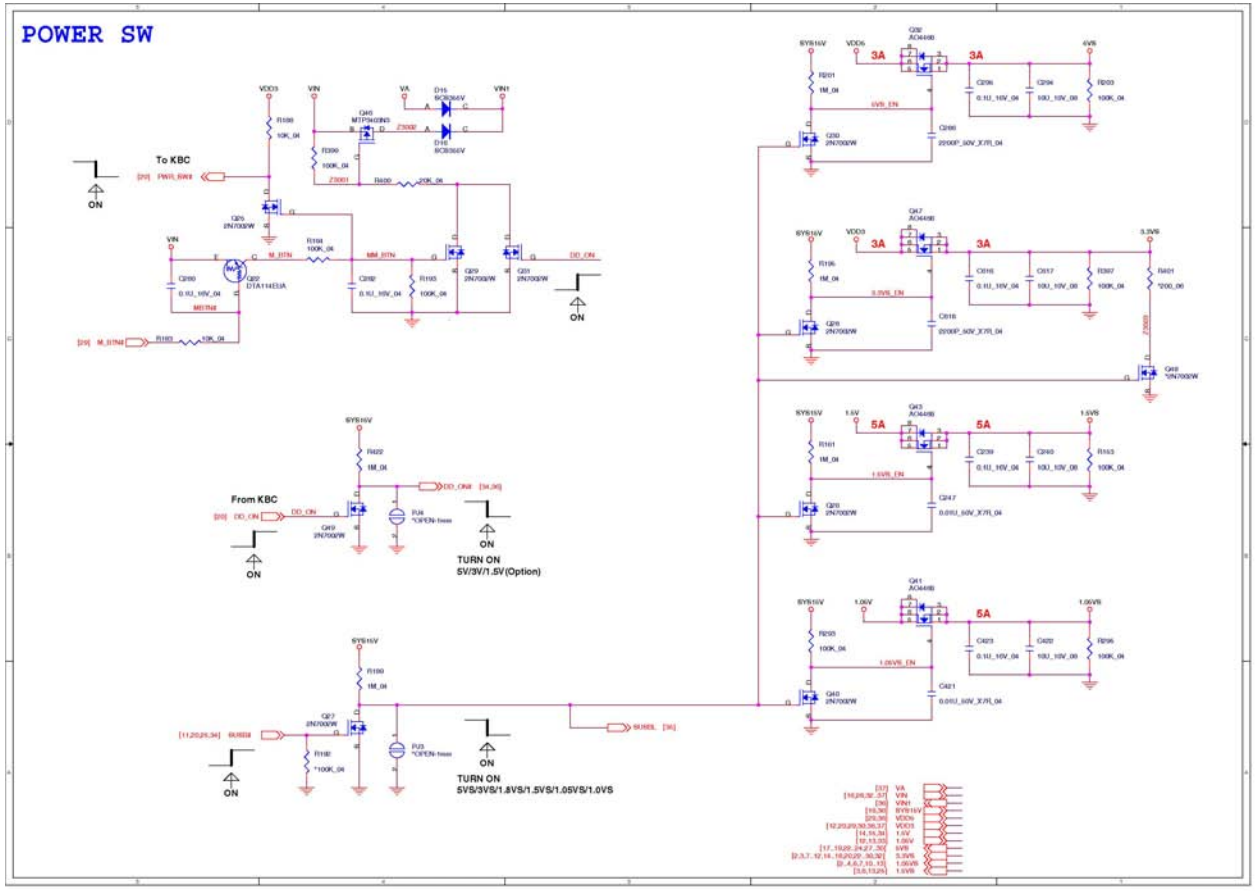

Power VCore

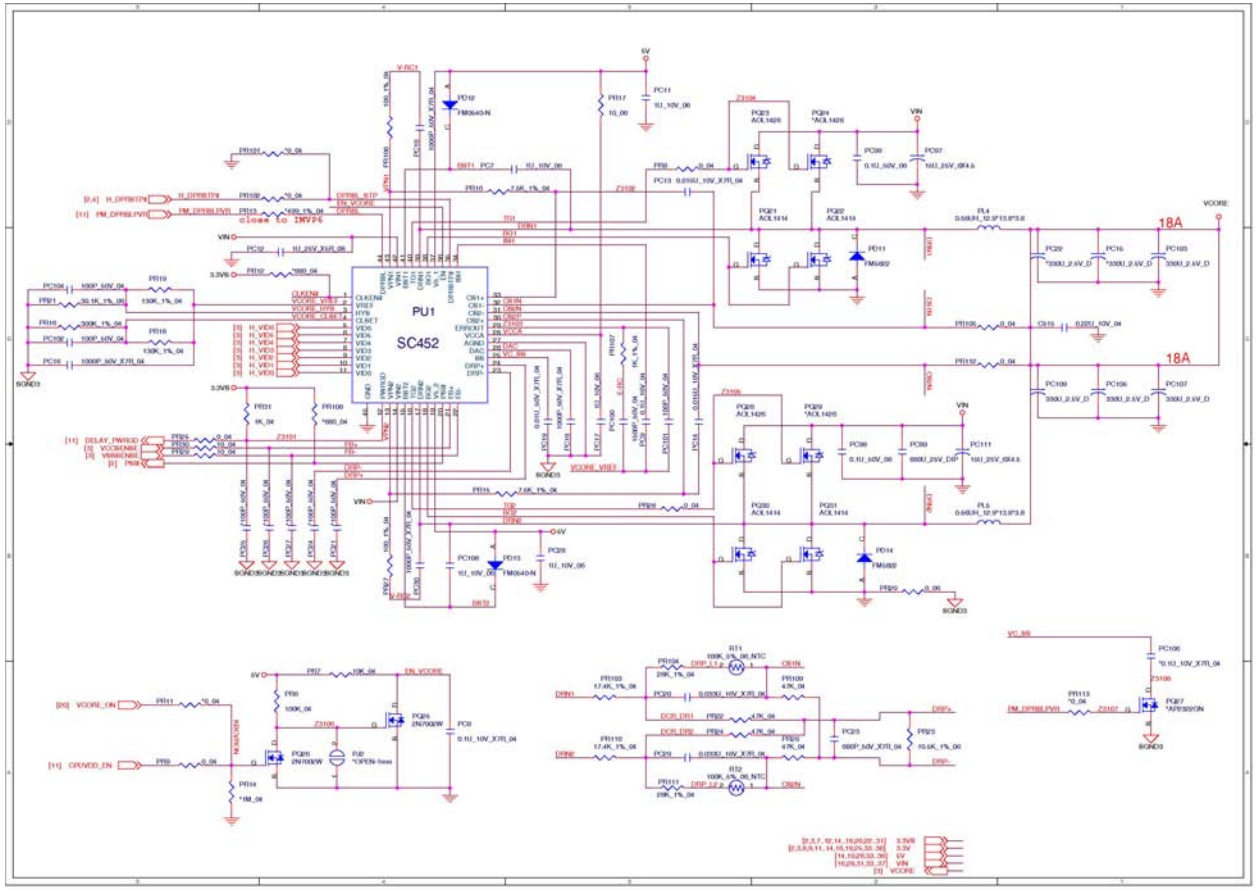

Sheet 32 of 53
Power VCore

PWR 1.05V, Screw Hole

Sheet 33 of 53
PWR 1.05V, Screw Hole

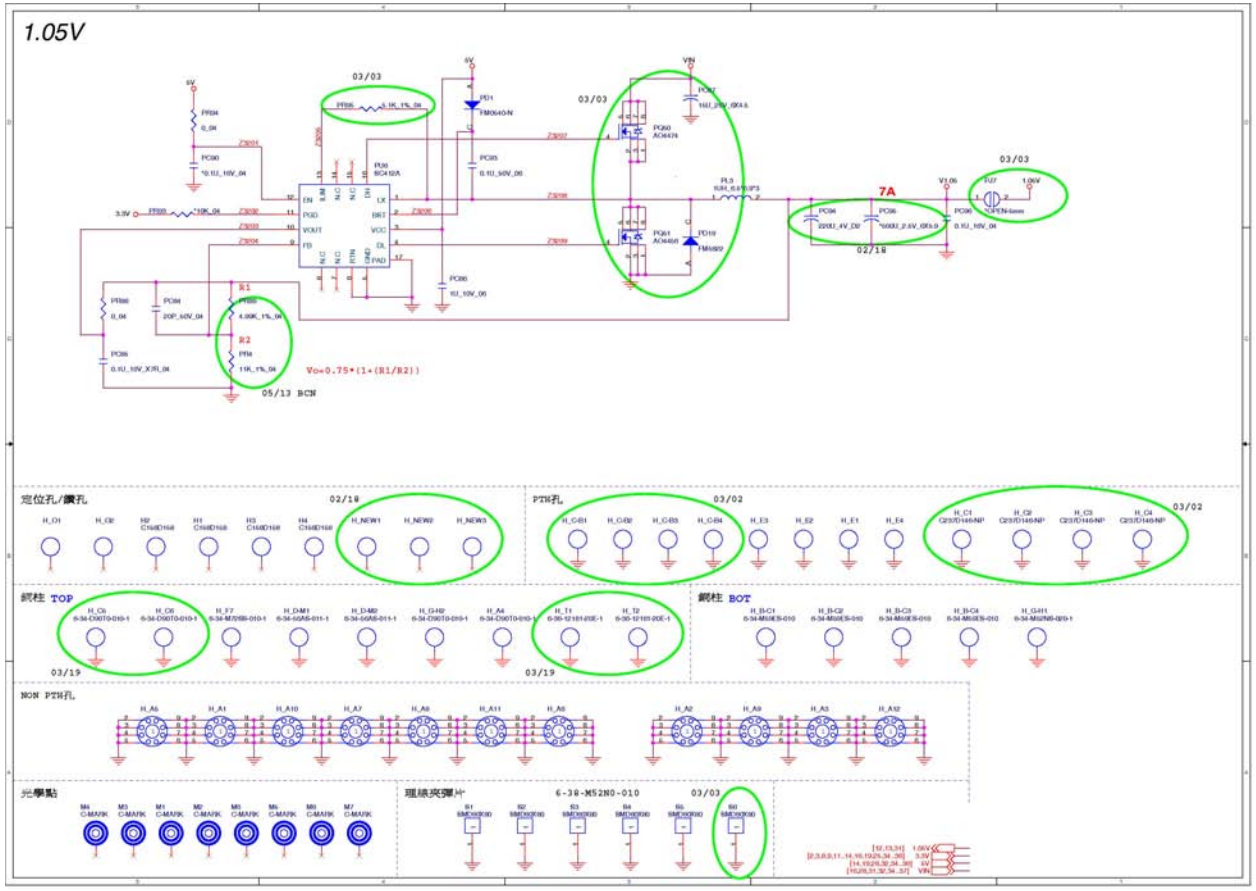

Power 1.5V/0.75V

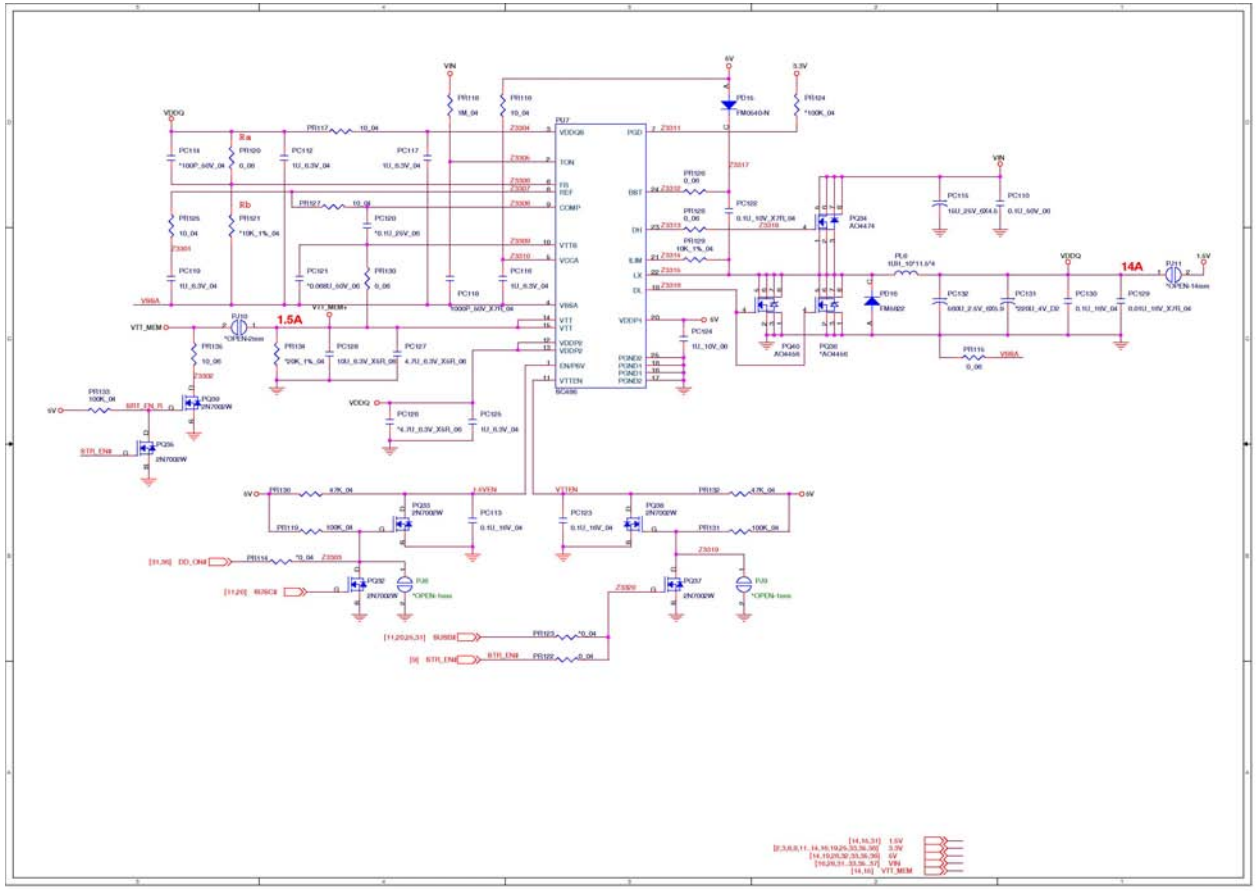

Sheet 34 of 53
Power 1.5V/0.75V

Power 1.0VS

Sheet 35 of 53
Power 1.0VS

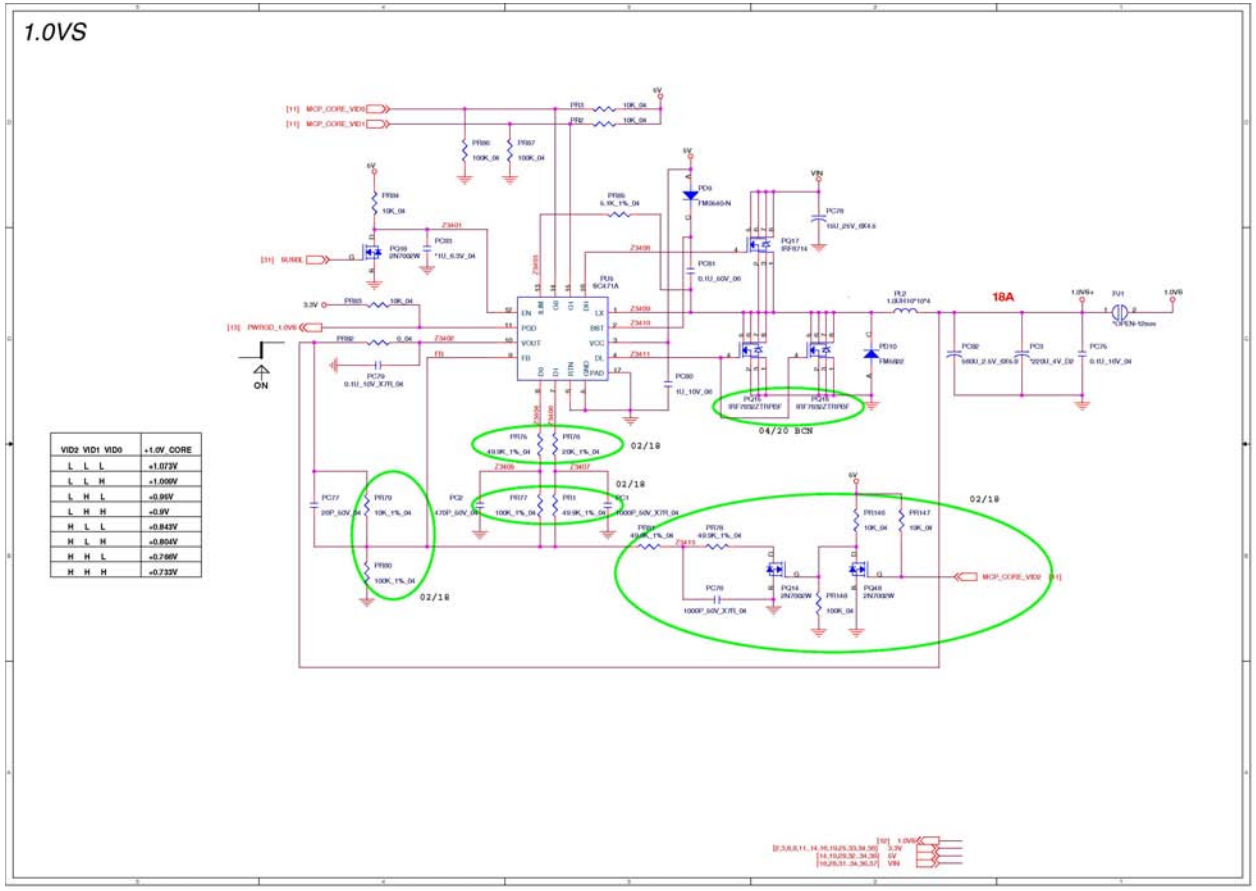

VID2	VID1	VID0	+1.0V_CORE
L	L	L	+1.073V
L	L	H	+1.009V
L	H	L	+0.95V
L	H	H	+0.9V
H	L	L	+0.843V
H	L	H	+0.804V
H	H	L	+0.766V
H	H	H	+0.733V

Power 3.3V/5V

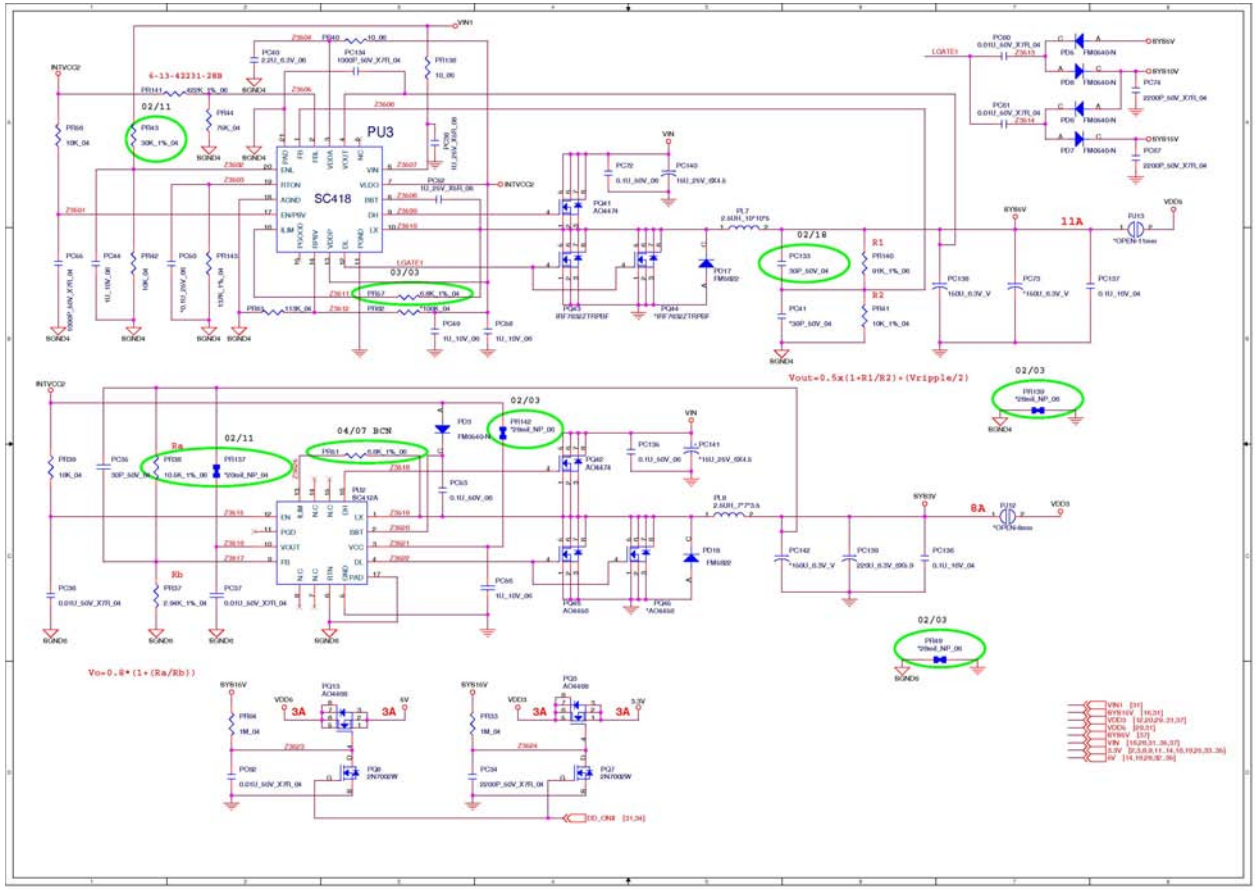

Sheet 36 of 53
Power 3.3V/5V

Power Charger, DC-In

Sheet 37 of 53
Power Charger, DC-In

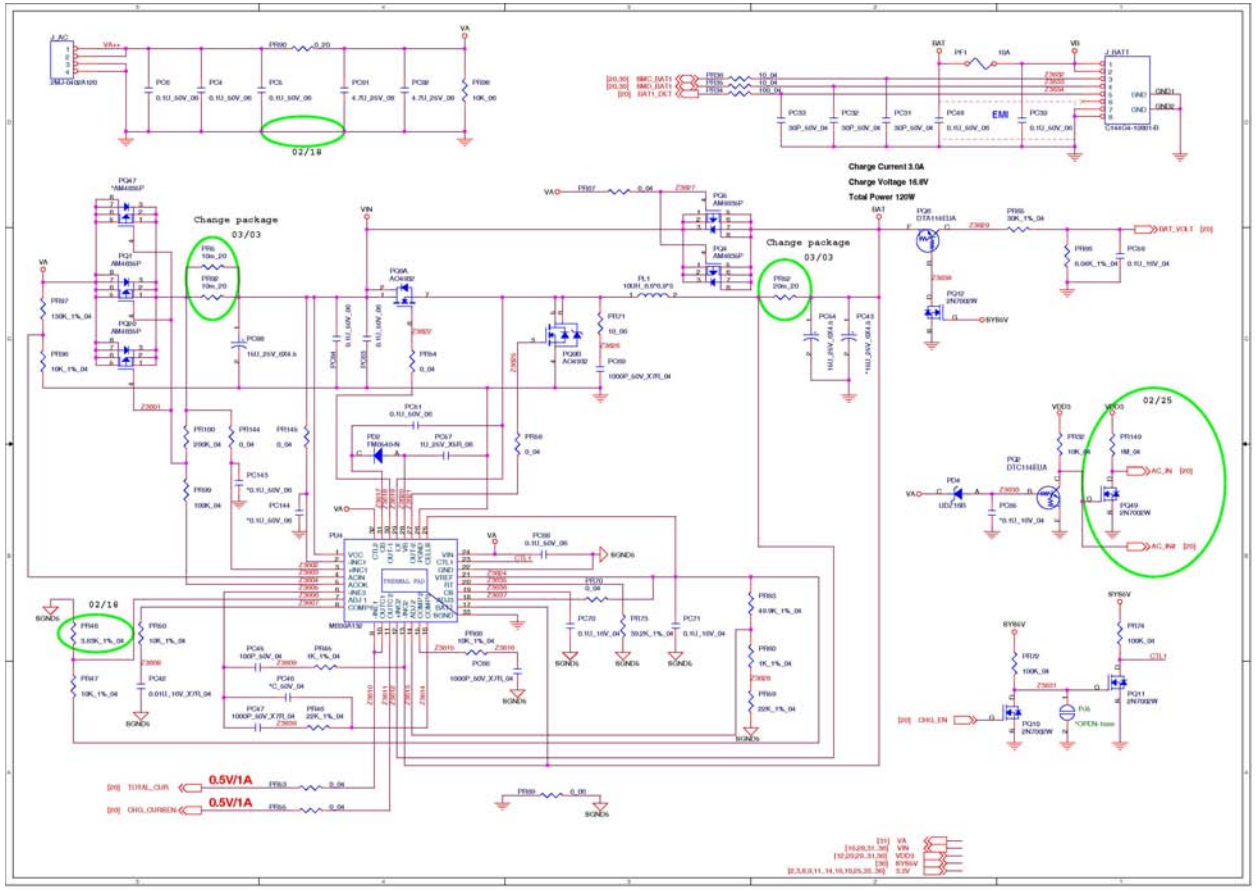

Single HDD Board

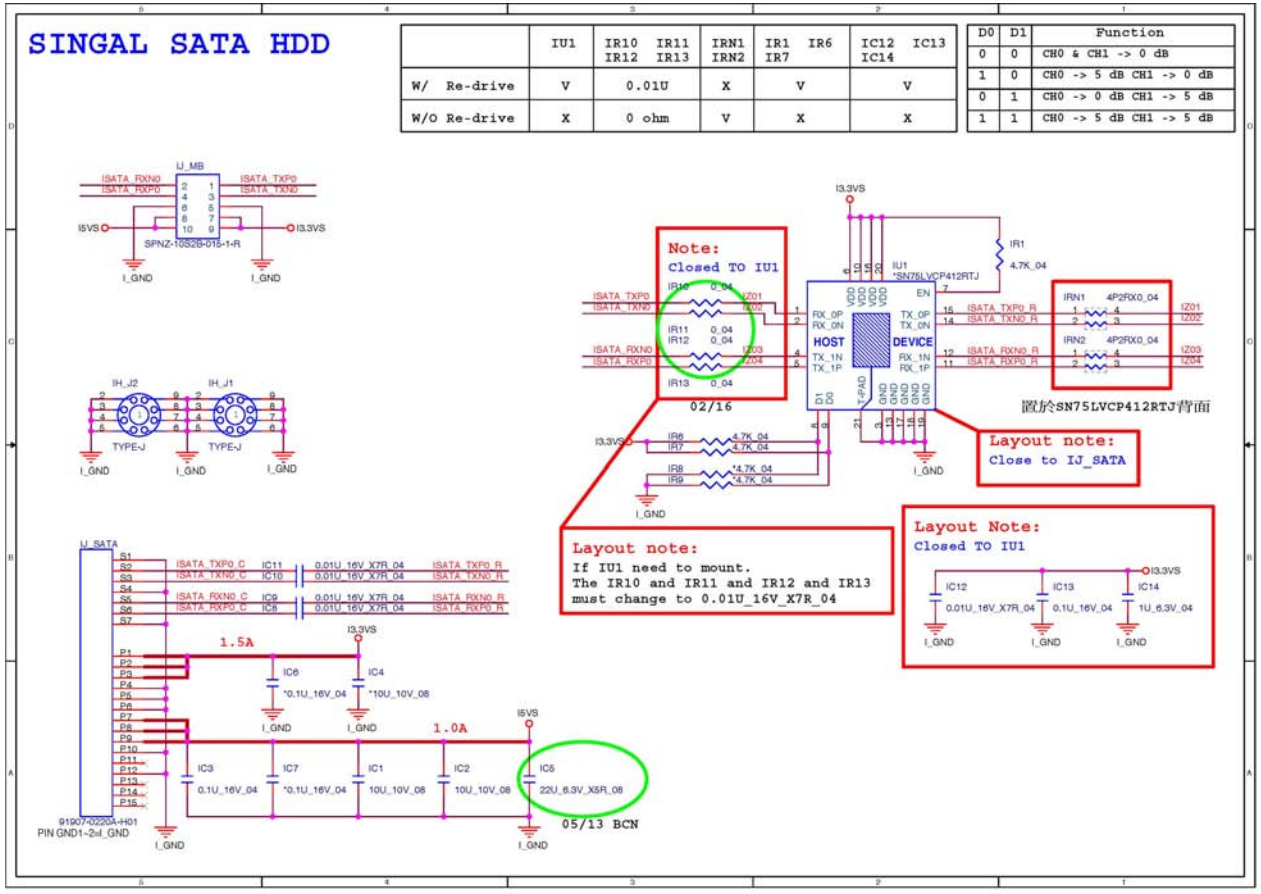

Sheet 38 of 53
Single HDD Board

Dual HDD Board

Sheet 39 of 53
Dual HDD Board

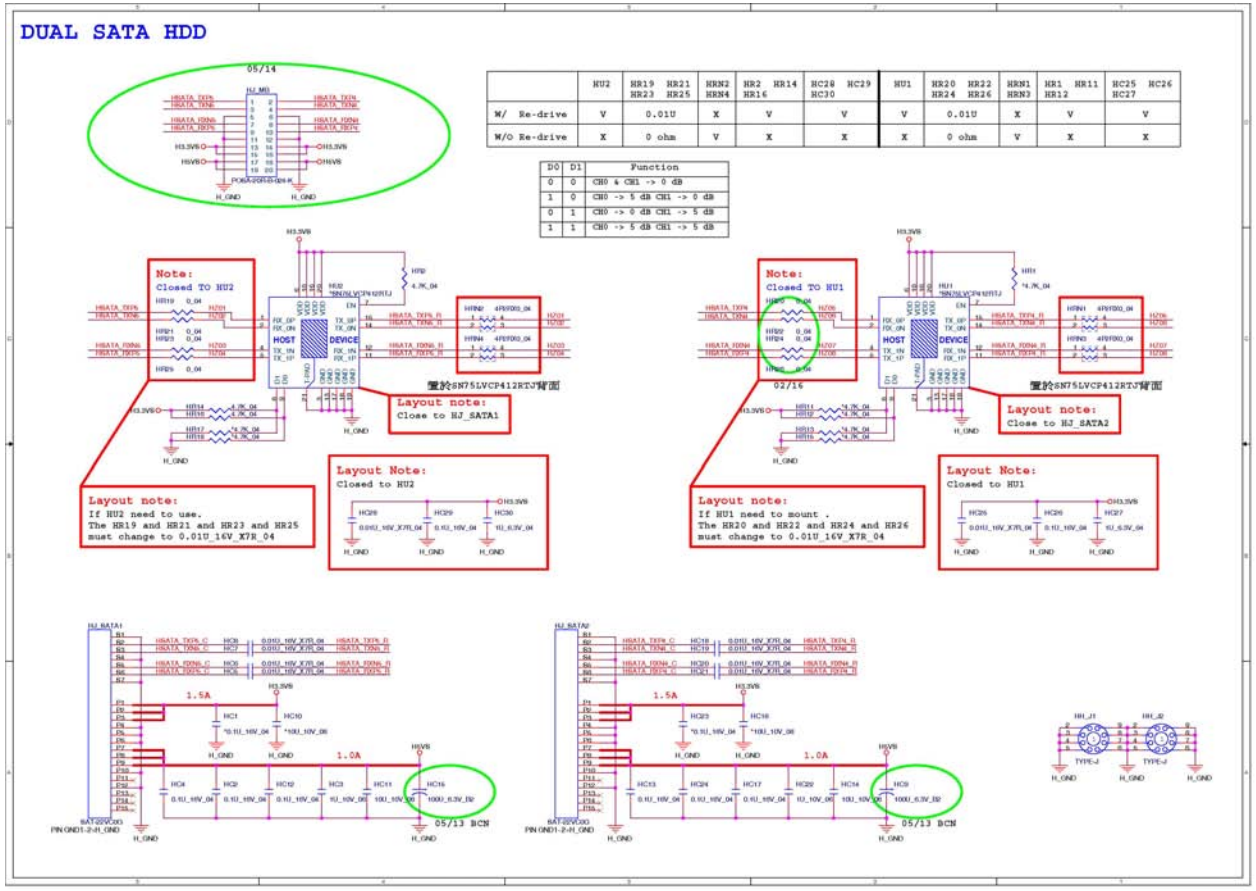

	HU2	HR19 HR21 HR23 HR25	HRN2 HRN4	HR2 HR14 HR16	HC28 HC29 HC30	HU1	HR20 HR22 HR24 HR26	HRN1 HRN3	HR1 HR11 HR12	HC25 HC26 HC27
W/ Re-drive	V	0.01U	X	V	V	V	0.01U	X	V	V
W/O Re-drive	X	0 ohm	V	X	X	X	0 ohm	V	X	X

D0	D1	Function
0	0	CH0 & CH1 -> 0 dB
1	0	CH0 -> 5 dB CH1 -> 0 dB
0	1	CH0 -> 0 dB CH1 -> 5 dB
1	1	CH0 -> 5 dB CH1 -> 5 dB

Audio Board

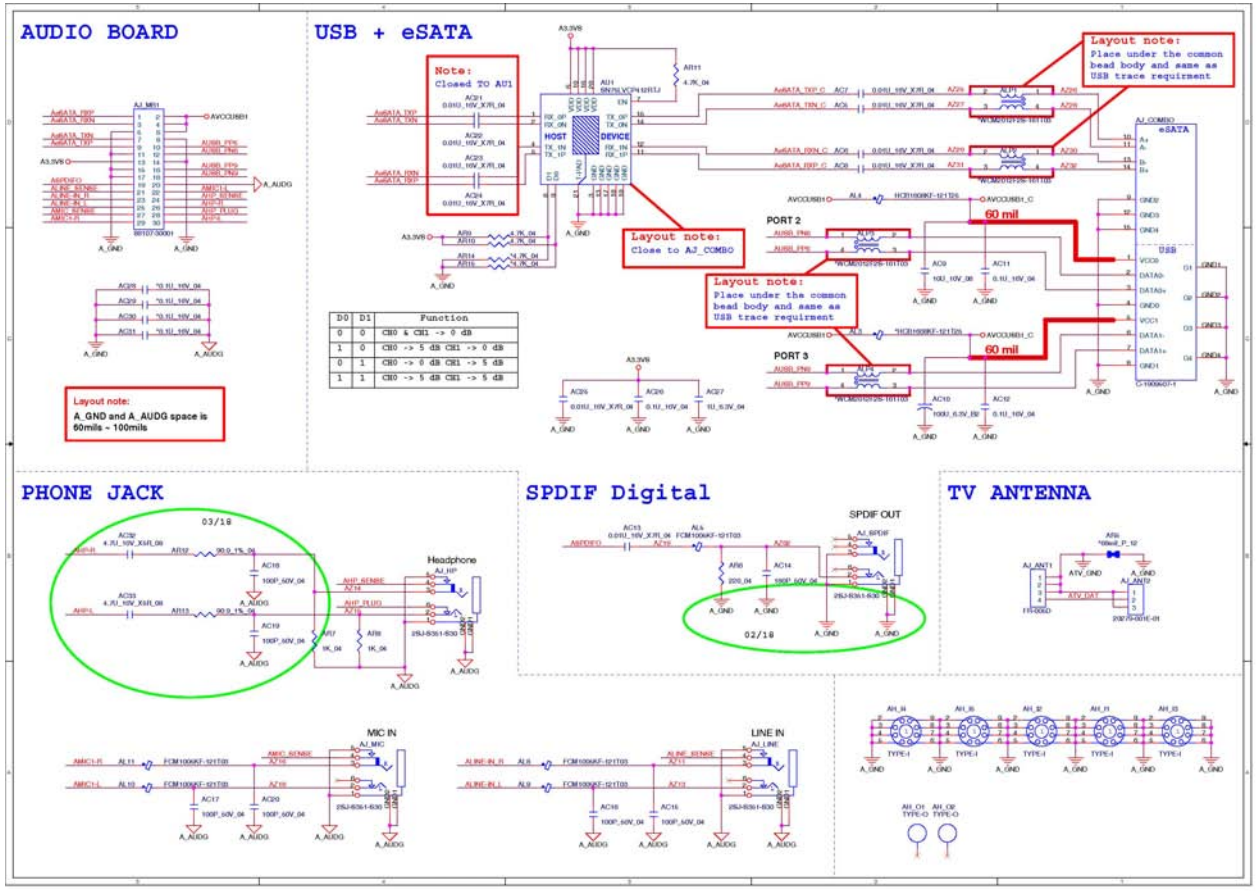

Sheet 40 of 53
Audio Board

Power Button Board

Sheet 41 of 53
Power Button Board

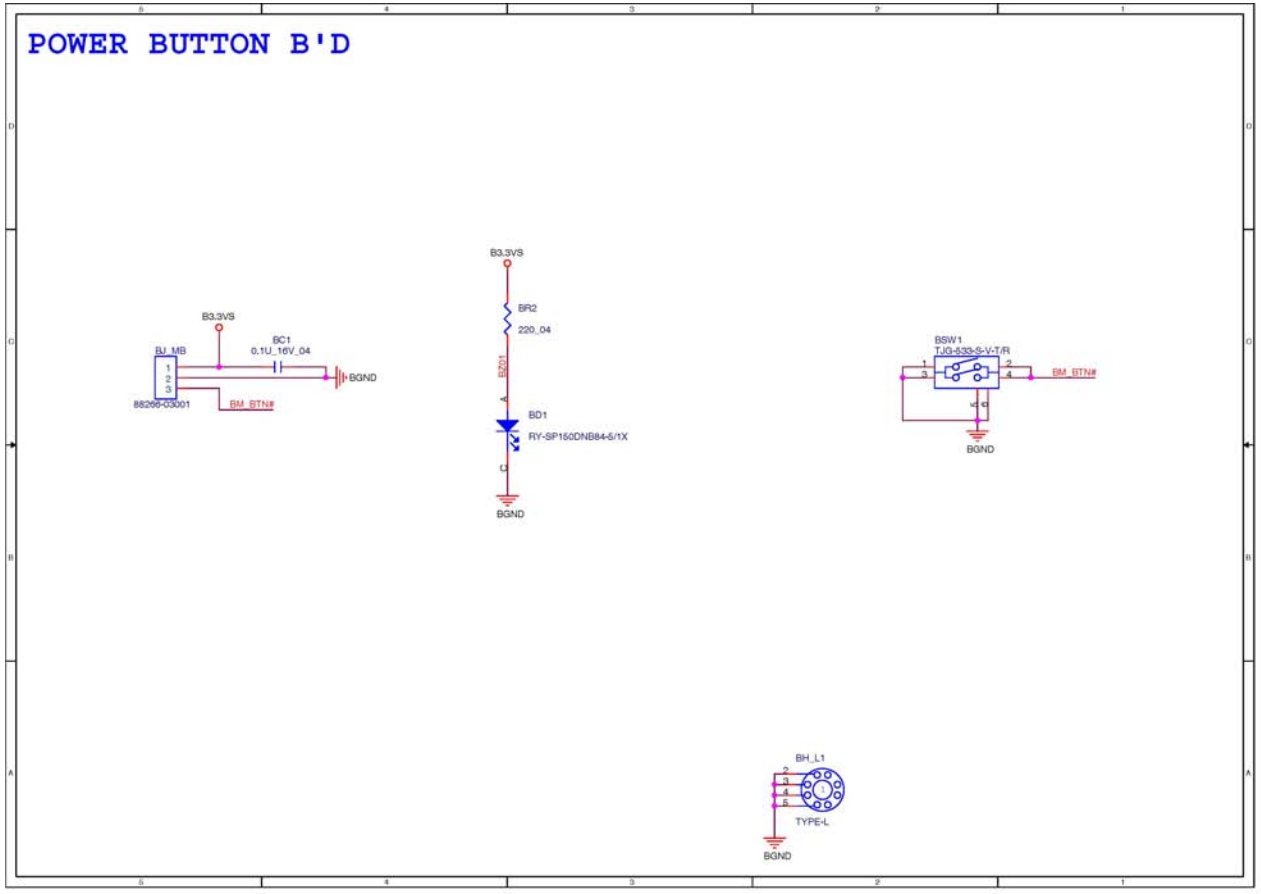

Click & FP Board

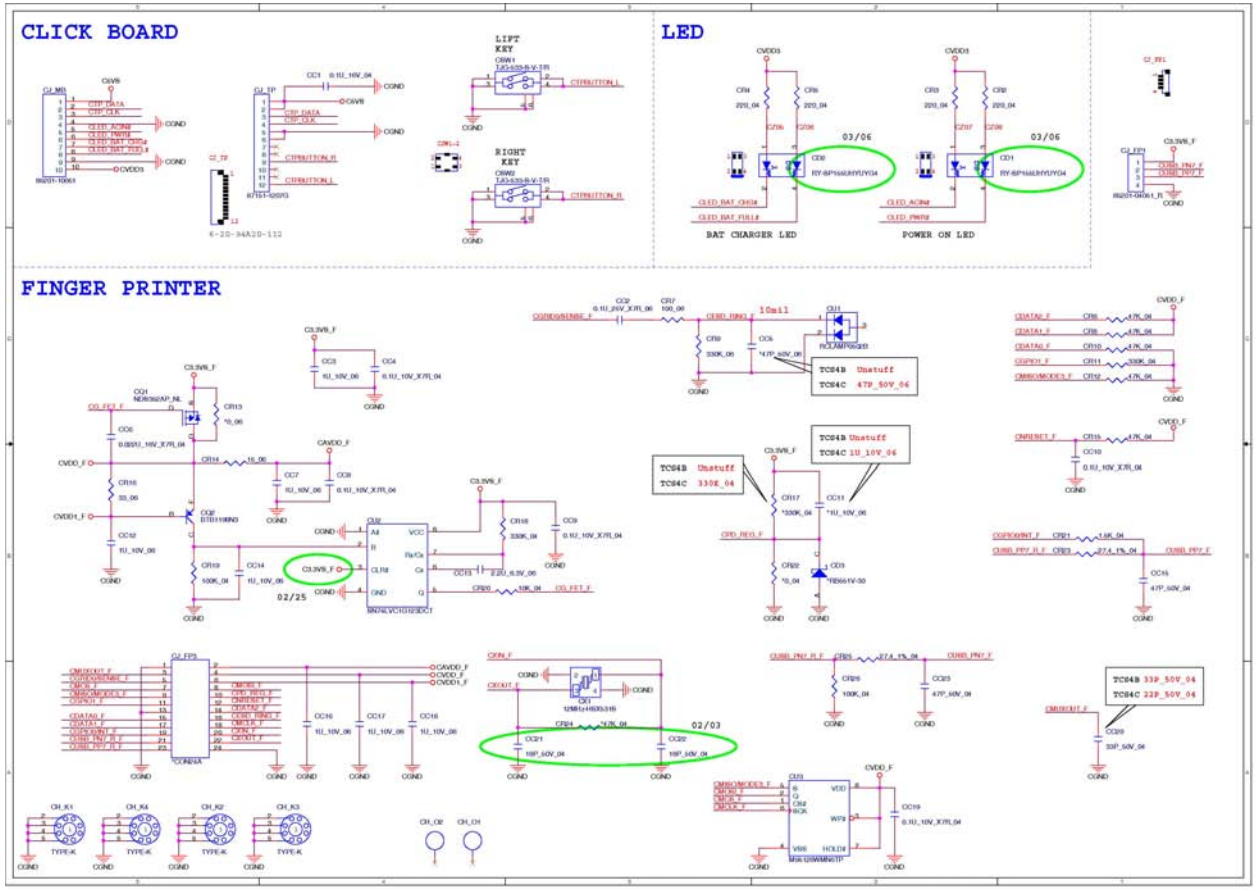

Sheet 42 of 53
Click & FP Board

Logo LED Board

Sheet 43 of 53
Logo LED Board

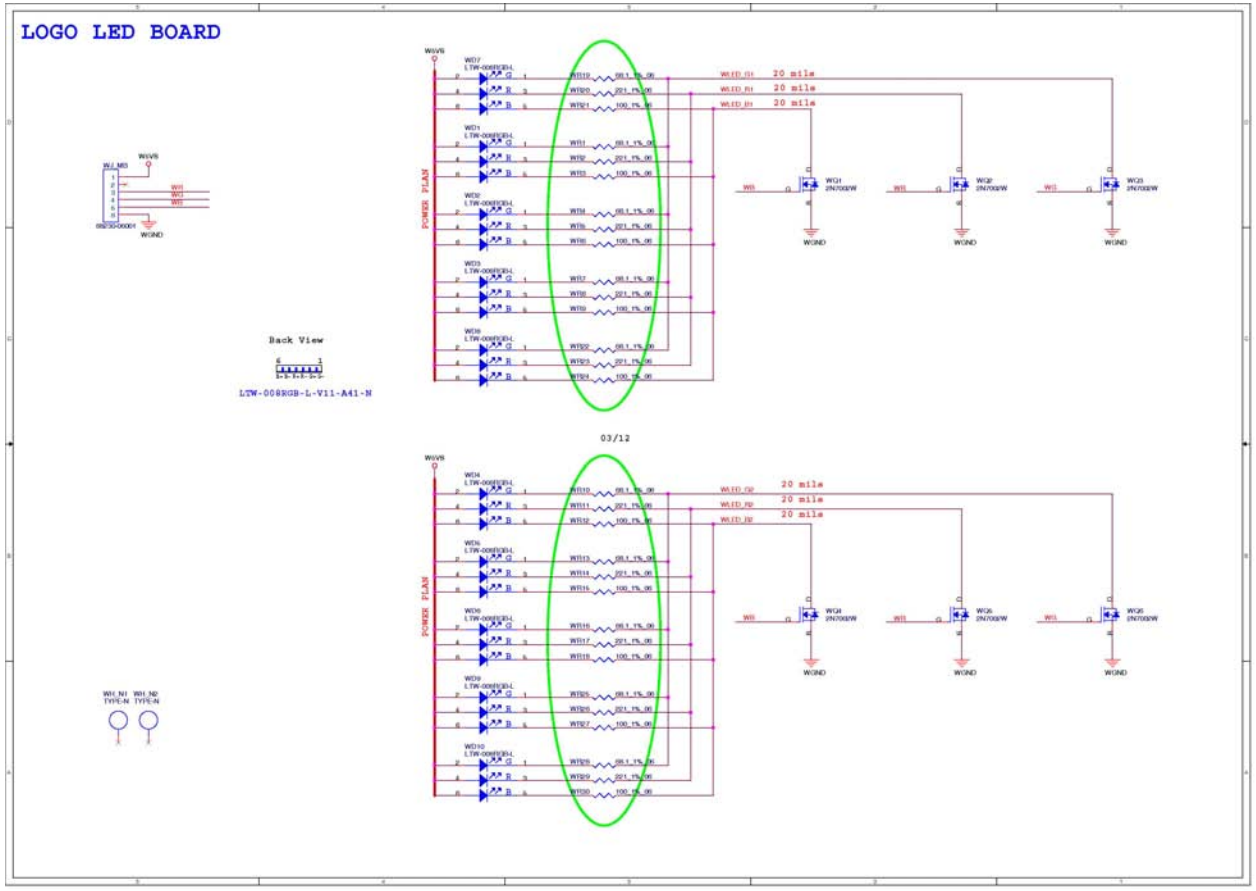

Game Key Board

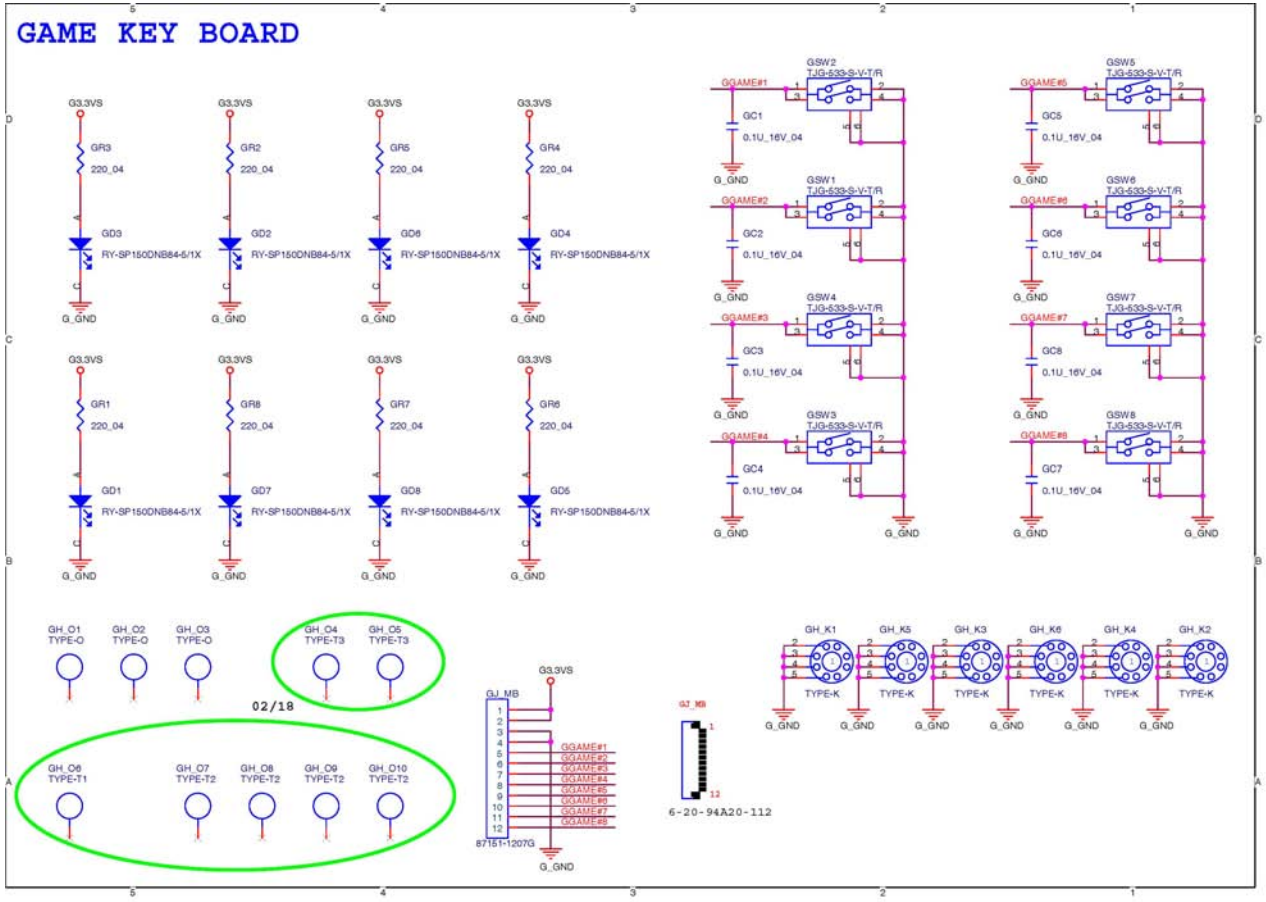

Sheet 44 of 53
Game Key Board

TouchPad LED Board

Sheet 45 of 53
TouchPad LED Board

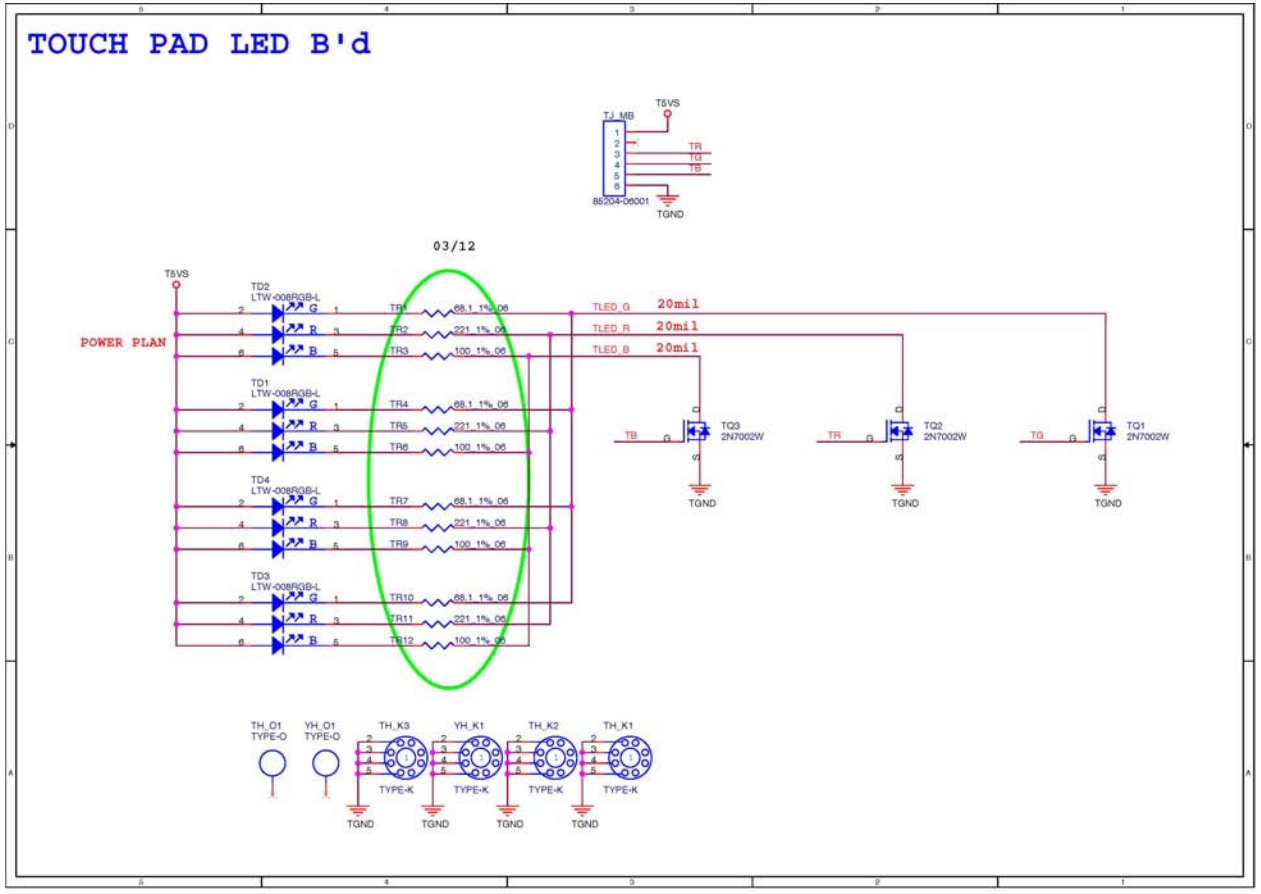

Front R Side LED Board

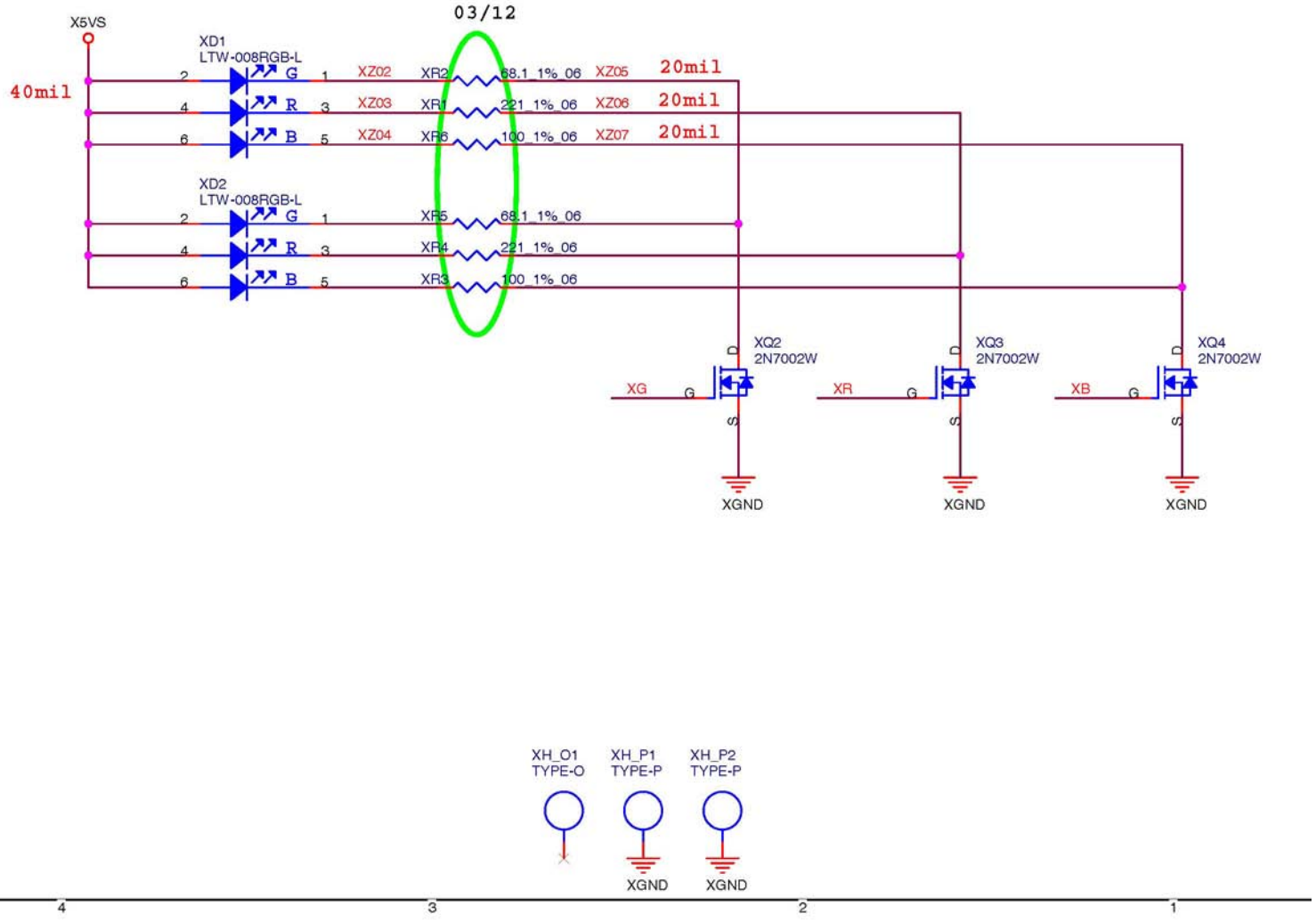

Sheet 46 of 53
Front R Side LED Board

Front L Side LED Board

Sheet 47 of 53
Front L Side LED Board

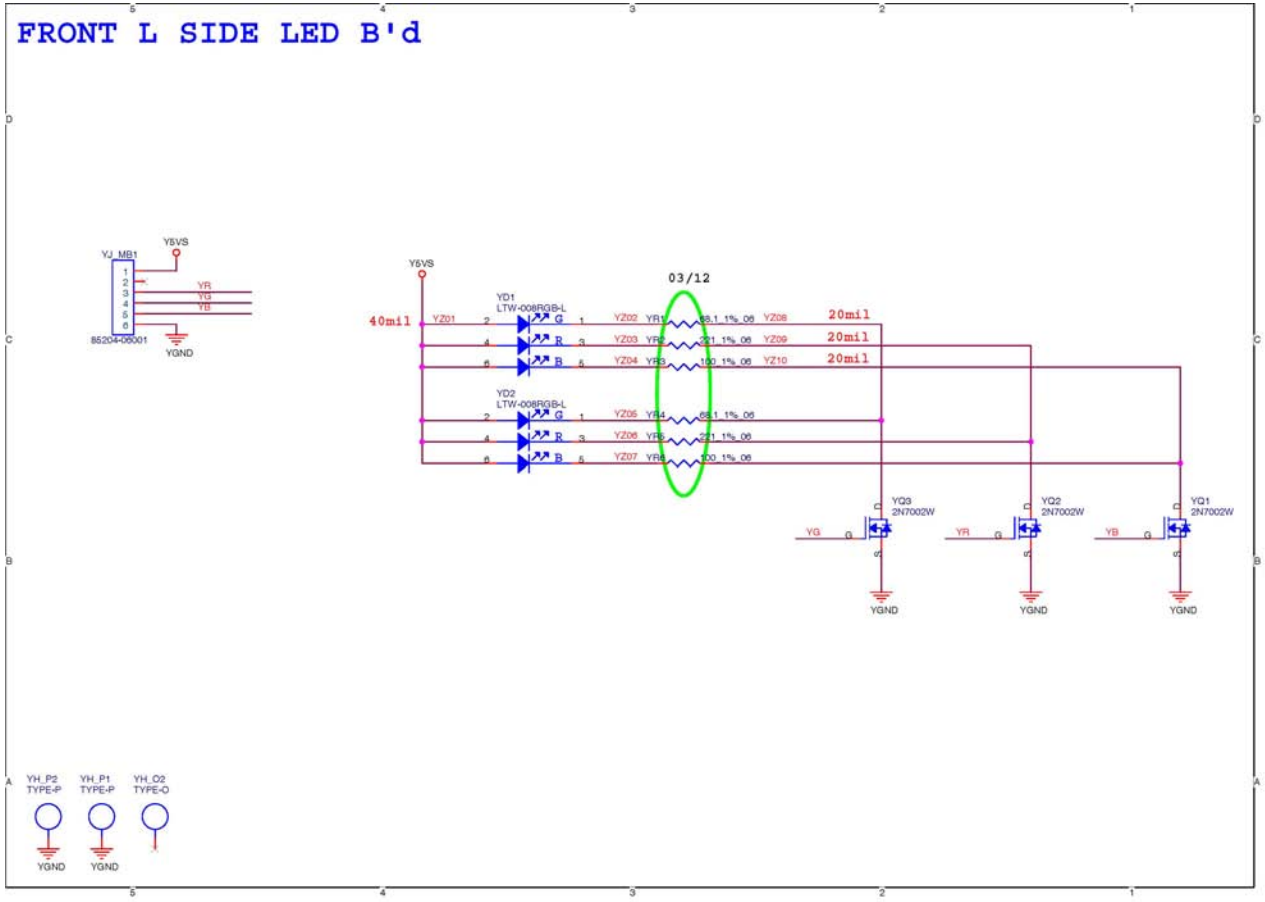

Back L Side LED Board

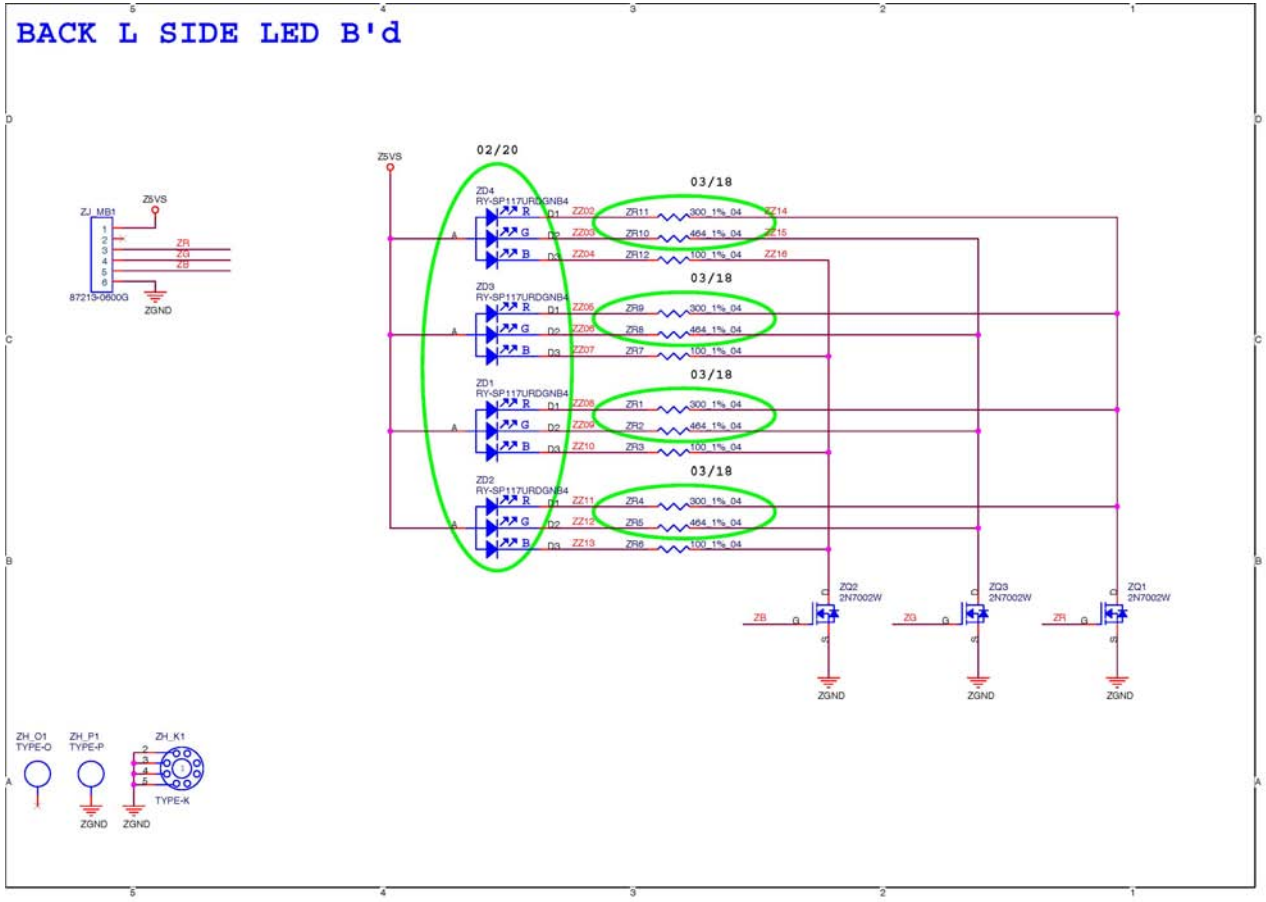

Sheet 48 of 53
Back L Side LED Board

Touch Sensor Board A

Sheet 49 of 53
Touch Sensor Board A

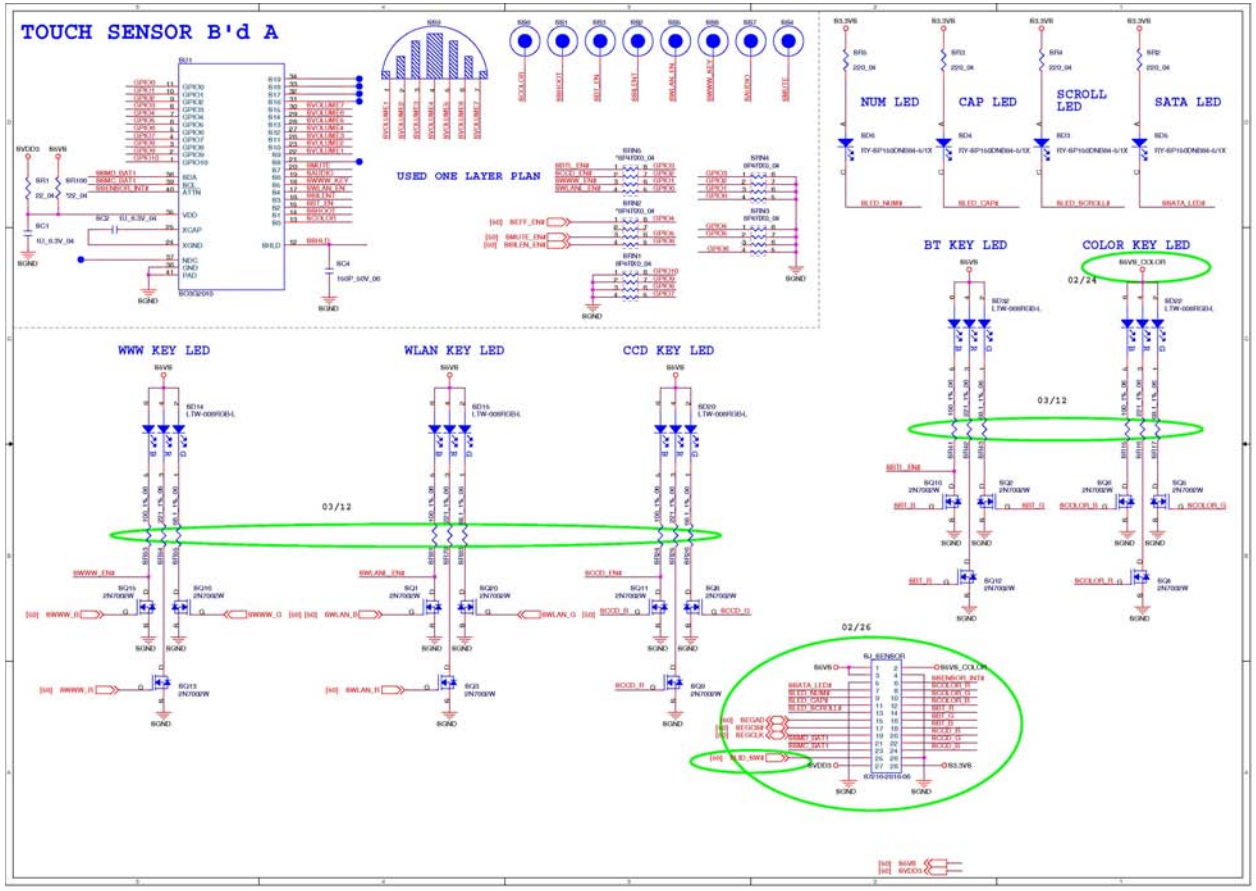

Touch Sensor Board B

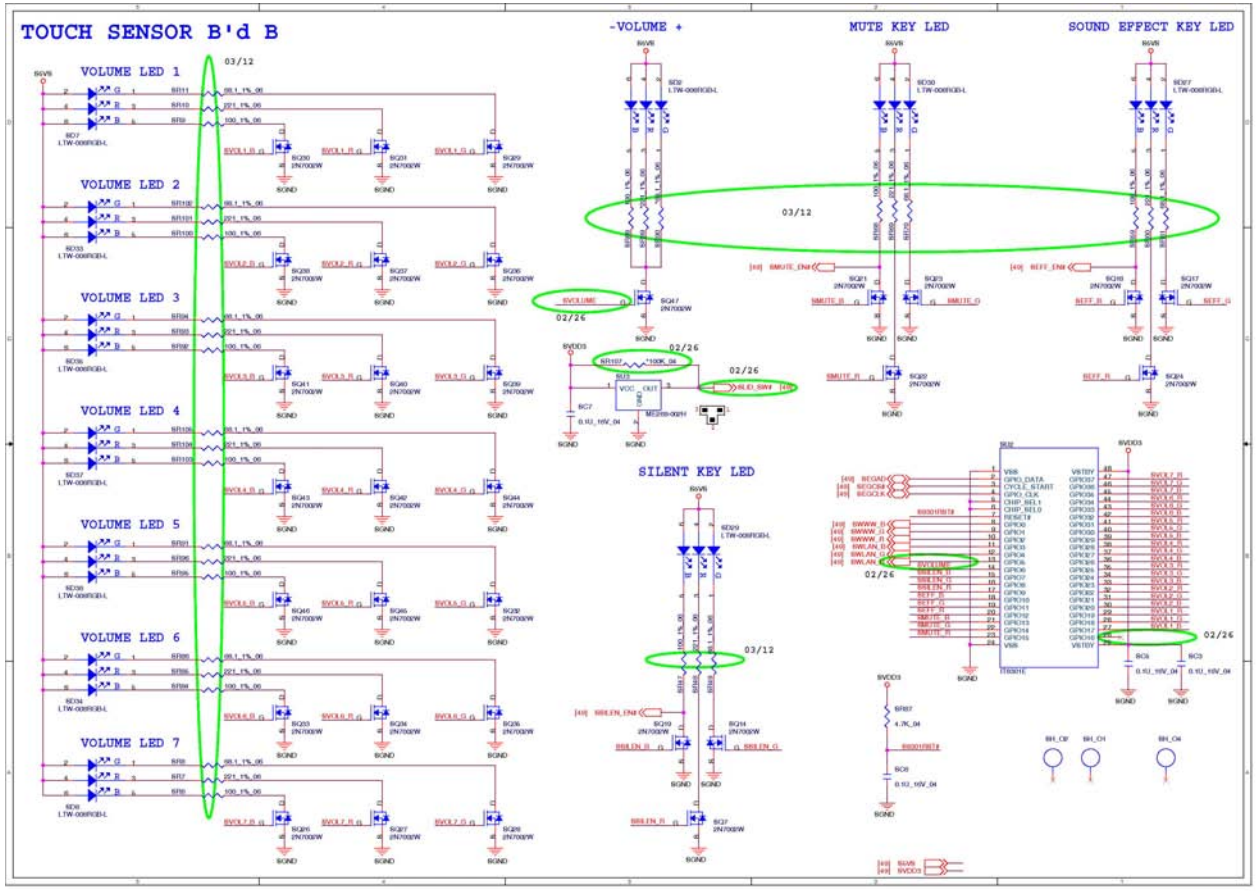

Sheet 50 of 53
Touch Sensor
Board B

CIR Board

CIR BOARD

Sheet 51 of 53
CIR Board

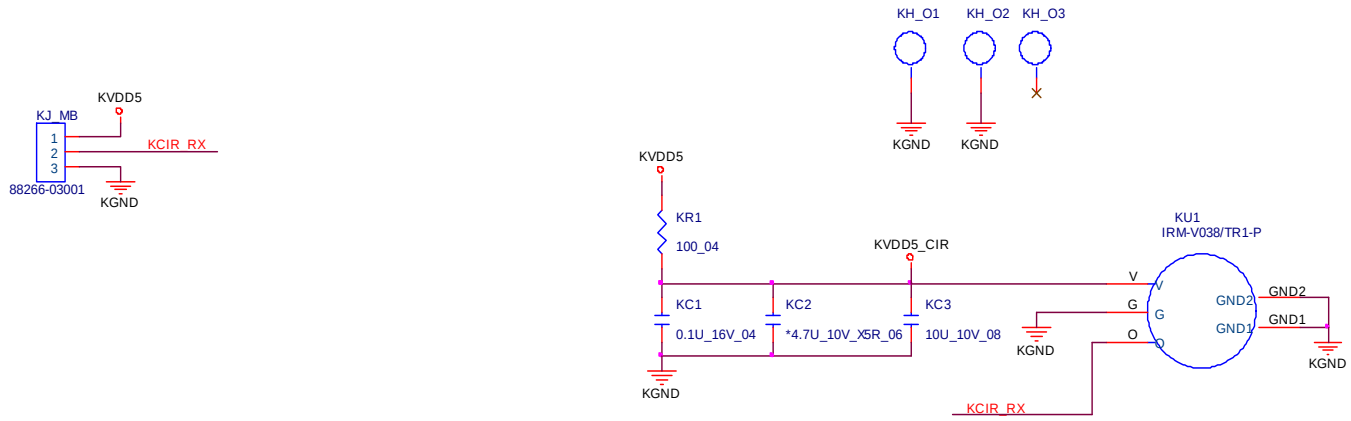

Finger Board

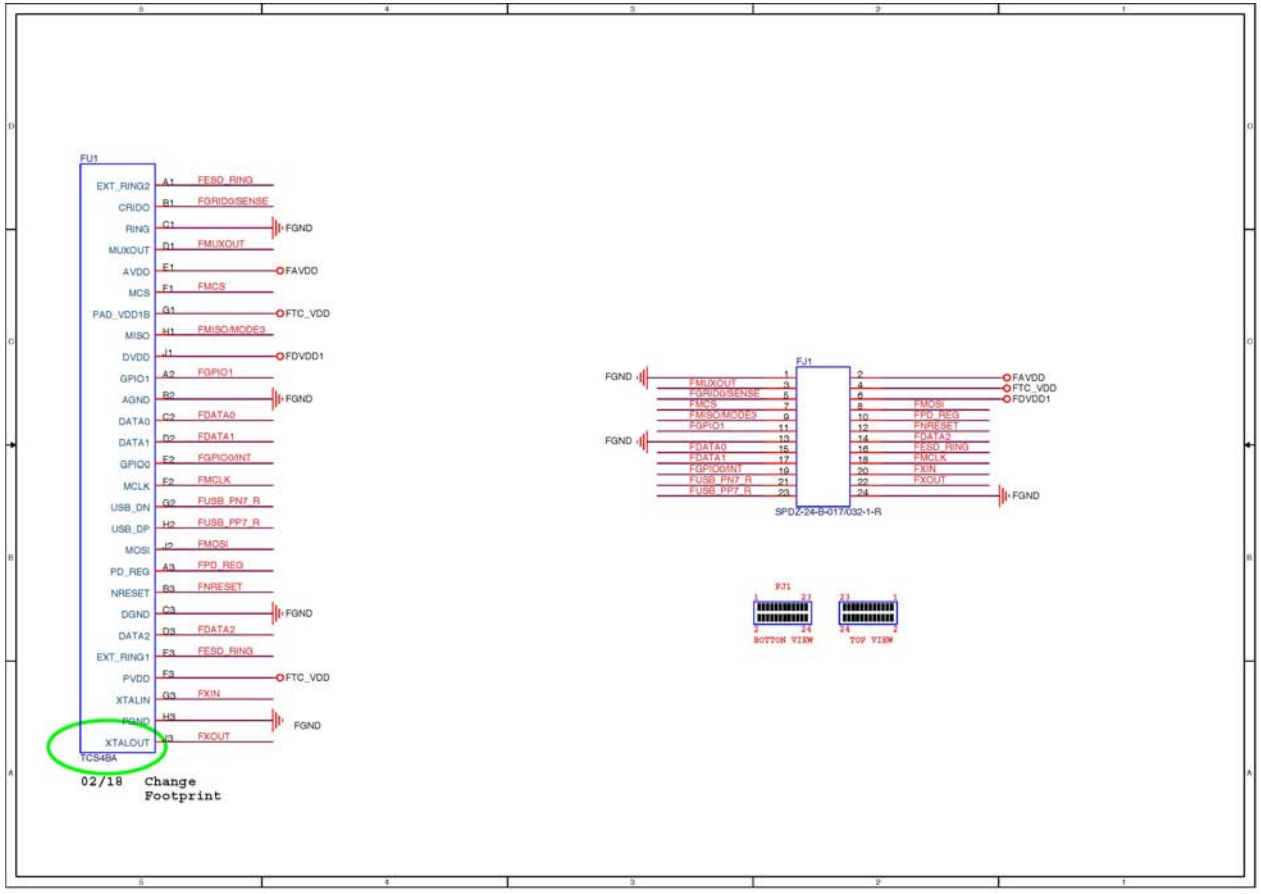

Sheet 52 of 53
Finger Board

PWR on SEQ Diagram

Sheet 53 of 53
PWR on SEQ Diagram