P170HM SERVICE MANUAL

Notebook Computer

P170HM

Service Manual

Notice

The company reserves the right to revise this publication or to change its contents without notice. Information contained herein is for reference only and does not constitute a commitment on the part of the manufacturer or any subsequent vendor. They assume no responsibility or liability for any errors or inaccuracies that may appear in this publication nor are they in anyway responsible for any loss or damage resulting from the use (or misuse) of this publication.

This publication and any accompanying software may not, in whole or in part, be reproduced, translated, transmitted or reduced to any machine readable form without prior consent from the vendor, manufacturer or creators of this publication, except for copies kept by the user for backup purposes.

Brand and product names mentioned in this publication may or may not be copyrights and/or registered trademarks of their respective companies. They are mentioned for identification purposes only and are not intended as an endorsement of that product or its manufacturer.

Version 1.0
January 2011

Trademarks

Intel and **Intel Core** are trademarks of Intel Corporation.
Windows® is a registered trademark of Microsoft Corporation.
Other brand and product names are trademarks and/or registered trademarks of their respective companies.

About this Manual

This manual is intended for service personnel who have completed sufficient training to undertake the maintenance and inspection of personal computers.

It is organized to allow you to look up basic information for servicing and/or upgrading components of the ***P170HM*** series notebook PC.

The following information is included:

Chapter 1, Introduction, provides general information about the location of system elements and their specifications.
Chapter 2, Disassembly, provides step-by-step instructions for disassembling parts and subsystems and how to upgrade elements of the system.

Appendix A, Part Lists
Appendix B, Schematic Diagrams
Appendix C, Updating the FLASH ROM BIOS

IMPORTANT SAFETY INSTRUCTIONS

Follow basic safety precautions, including those listed below, to reduce the risk of fire, electric shock and injury to persons when using any electrical equipment:

1. Do not use this product near water, for example near a bath tub, wash bowl, kitchen sink or laundry tub, in a wet basement or near a swimming pool.
2. Avoid using a telephone (other than a cordless type) during an electrical storm. There may be a remote risk of electrical shock from lightning.
3. Do not use the telephone to report a gas leak in the vicinity of the leak.
4. Use only the power cord and batteries indicated in this manual. Do not dispose of batteries in a fire. They may explode. Check with local codes for possible special disposal instructions.
5. This product is intended to be supplied by a Listed Power Unit with an AC Input of 100 - 240V, 50 - 60Hz, DC Output of 19V, 11.57A (**220** Watts) minimum AC/DC Adapter.

CAUTION

This Computer's Optical Device is a Laser Class 1 Product

Instructions for Care and Operation

The notebook computer is quite rugged, but it can be damaged. To prevent this, follow these suggestions:

1. **Don't drop it, or expose it to shock.** If the computer falls, the case and the components could be damaged.

Do not expose the computer to any shock or vibration.	*Do not place it on an unstable surface.*	*Do not place anything heavy on the computer.* 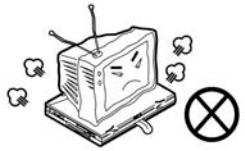

2. **Keep it dry, and don't overheat it.** Keep the computer and power supply away from any kind of heating element. This is an electrical appliance. If water or any other liquid gets into it, the computer could be badly damaged.

Do not expose it to excessive heat or direct sunlight.	*Do not leave it in a place where foreign matter or moisture may affect the system.*	*Don't use or store the computer in a humid environment.*	*Do not place the computer on any surface which will block the vents.* 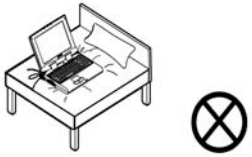

3. **Follow the proper working procedures for the computer**. Shut the computer down properly and don't forget to save your work. Remember to periodically save your data as data may be lost if the battery is depleted.

Do not turn off the power until you properly shut down all programs.	*Do not turn off any peripheral devices when the computer is on.*	*Do not disassemble the computer by yourself.*	*Perform routine maintenance on your computer.*

4. **Avoid interference.** Keep the computer away from high capacity transformers, electric motors, and other strong magnetic fields. These can hinder proper performance and damage your data.
5. **Take care when using peripheral devices**.

Use only approved brands of peripherals. 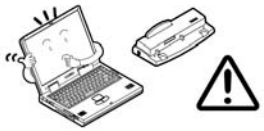	*Unplug the power cord before attaching peripheral devices.* 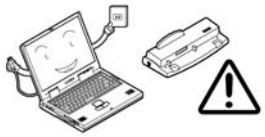

Power Safety

The computer has specific power requirements:

- Only use a power adapter approved for use with this computer.
- Your AC adapter may be designed for international travel but it still requires a steady, uninterrupted power supply. If you are unsure of your local power specifications, consult your service representative or local power company.
- The power adapter may have either a 2-prong or a 3-prong grounded plug. The third prong is an important safety feature; do not defeat its purpose. If you do not have access to a compatible outlet, have a qualified electrician install one.
- When you want to unplug the power cord, be sure to disconnect it by the plug head, not by its wire.
- Make sure the socket and any extension cord(s) you use can support the total current load of all the connected devices.
- Before cleaning the computer, make sure it is disconnected from any external power supplies.

Power Safety Warning

Before you undertake any upgrade procedures, make sure that you have turned off the power, and disconnected all peripherals and cables (including telephone lines). It is advisable to also remove your battery in order to prevent accidentally turning the machine on.

Do not plug in the power cord if you are wet.	*Do not use the power cord if it is broken.* 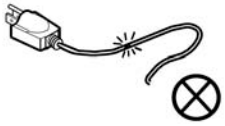	*Do not place heavy objects on the power cord.* 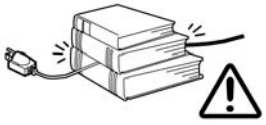

Battery Precautions

- Only use batteries designed for this computer. The wrong battery type may explode, leak or damage the computer.
- Do not continue to use a battery that has been dropped, or that appears damaged (e.g. bent or twisted) in any way. Even if the computer continues to work with a damaged battery in place, it may cause circuit damage, which may possibly result in fire.
- Recharge the batteries using the notebook's system. Incorrect recharging may make the battery explode.
- Do not try to repair a battery pack. Refer any battery pack repair or replacement to your service representative or qualified service personnel.
- Keep children away from, and promptly dispose of a damaged battery. Always dispose of batteries carefully. Batteries may explode or leak if exposed to fire, or improperly handled or discarded.
- Keep the battery away from metal appliances.
- Affix tape to the battery contacts before disposing of the battery.
- Do not touch the battery contacts with your hands or metal objects.

Battery Guidelines

The following can also apply to any backup batteries you may have.

- If you do not use the battery for an extended period, then remove the battery from the computer for storage.
- Before removing the battery for storage charge it to 60% - 70%.
- Check stored batteries at least every 3 months and charge them to 60% - 70%.

Battery Disposal

The product that you have purchased contains a rechargeable battery. The battery is recyclable. At the end of its useful life, under various state and local laws, it may be illegal to dispose of this battery into the municipal waste stream. Check with your local solid waste officials for details in your area for recycling options or proper disposal.

Caution

Danger of explosion if battery is incorrectly replaced. Replace only with the same or equivalent type recommended by the manufacturer. Discard used battery according to the manufacturer's instructions.

Battery Level

Click the battery icon in the taskbar to see the current battery level and charge status. A battery that drops below a level of 10% will not allow the computer to boot up. Make sure that any battery that drops below 10% is recharged within one week.

Related Documents

You may also need to consult the following manual for additional information:

User's Manual on Disc
This describes the notebook PC's features and the procedures for operating the computer and its ROM-based setup program. It also describes the installation and operation of the utility programs provided with the notebook PC.

System Startup

1. Remove all packing materials.
2. Place the computer on a stable surface.
3. Insert the battery and tighten the screws.
4. Securely attach any peripherals you want to use with the computer (e.g. keyboard and mouse) to their ports.
5. Attach the AC/DC adapter to the DC-In jack at the rear of the computer, then plug the AC power cord into an outlet, and connect the AC power cord to the AC/DC adapter.
6. Use one hand to raise the lid/LCD to a comfortable viewing angle (do not to exceed **130** degrees); use the other hand (as illustrated in <Hyperlink B n l>Figure 1) to support the base of the computer (**Note**: **Never** lift the computer by the lid/LCD).
7. Press the power button to turn the computer "on".

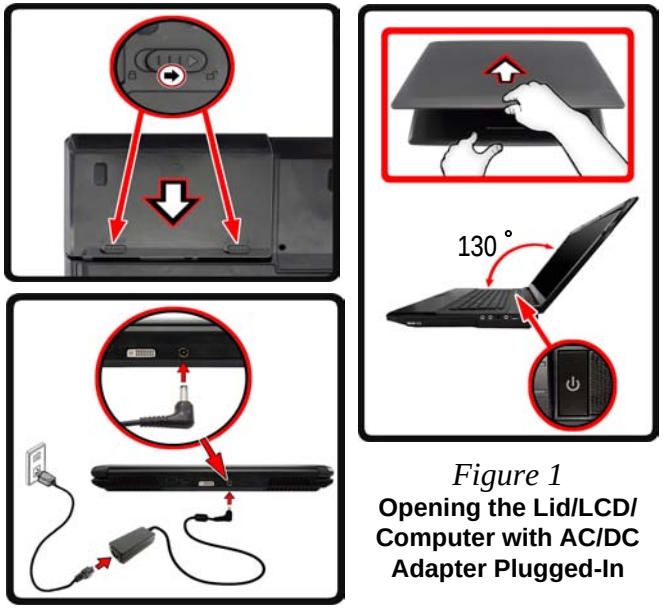

Figure 1
Opening the Lid/LCD/ Computer with AC/DC Adapter Plugged-In

Contents

Introduction 1-1

Overview 1-1
External Locator - Top View with LCD Panel Open 1-4
External Locator - Front & Right side Views 1-5
External Locator - Left Side & Rear View 1-6
External Locator - Bottom View 1-7
Mainboard Overview - Top (Key Parts) 1-8
Mainboard Overview - Bottom (Key Parts) 1-9
Mainboard Overview - Top (Connectors) 1-10
Mainboard Overview - Bottom (Connectors) 1-11

Disassembly 2-1

Overview 2-1
Maintenance Tools 2-2
Connections 2-2
Maintenance Precautions 2-3
Disassembly Steps 2-4
Removing the Battery 2-5
Removing the Hard Disk Drive 2-6
Inserting the Hard Disk Into the HDD Bay 2-8
Removing the Optical (CD/DVD) Device 2-9
Removing the Hard Disk from the Secondary HDD Bay 2-10
Removing the Primary System Memory (RAM) 2-12
Removing the System Memory (RAM) from Under the Keyboard 2-14
Removing the Wireless LAN Module 2-16
Removing and Installing the Processor 2-17
Removing and Installing the Video Card 2-20
Removing and Installing the TV Tuner Module 2-22
Removing the Microphone 2-24

Part Lists A-1

Part List Illustration Location A-2
Top with Fingerprint A-3
Top without Fingerprint A-4
Bottom A-5
LCD A-6
HDD A-7
COMBO A-8
DVD-Dual Drive A-9

Schematic Diagrams.....B-1

System Block Diagram B-2
Clock Generator B-3
Processor 1/7 .....B-4
Processor 2/7 .....B-5
Processor 3/7 .....B-6
Processor 4/7 .....B-7
Processor 5/7 .....B-8
Processor 6/7 .....B-9
Processor 7/7 .....B-10
DDRIII CHA SO-DIMM_0 .....B-11
DDRIII CHA SO-DIMM_1 .....B-12
DDRIII CHB SO-DIMM_0 .....B-13
DDRIII CHB SO-DIMM_1 .....B-14
MXM PCI-E B-15
Panel, Inverter, CRT B-16
1394_JMB380C B-17
DVI B-18
HDMI B-19
CougarPoint - M 1/9 .....B-20

CougarPoint - M 2/9 ..... B-21
CougarPoint - M 3/9 ..... B-22
CougarPoint - M 4/9 ..... B-23
CougarPoint - M 5/9 ..... B-24
CougarPoint - M 6/9 ..... B-25
CougarPoint - M 7/9 ..... B-26
CougarPoint - M 8/9 ..... B-27
CougarPoint - M 9/9 ..... B-28
3G, CCD B-29
Mini PCIE, LID B-30
LED, Hotkey, LID SW, Fan B-31
RJ45 ..... B-32
Codec Realtek ALC892 ..... B-33
APA2010D1-TPA2008D2 ..... B-34
KBC-ITE IT8519 ..... B-35
USB, TP, FP, MULTI-CONN B-36
Card Reader (JMC 251C) B-37
USB 3.0 ..... B-38
VDD3, VDD5 ..... B-39
5V, 3.3V, 5VS, 3VS, 1.5VS, VIN1 ..... B-40
Power 1.05VS, 1.05VS_VTT B-41
Power 1.5V/VTT_MEM B-42
Power 1.8VS B-43
Power V-Core 1 ..... B-44
Power V-Core 2 ..... B-45
AC_In, Charger B-46
Power 0.85VS B-47
Audio Jack B-48
X5100 ODD Board B-49
X5100 Click Board B-50
X5100 LED 1 Board B-51
X5100 LED 2 Board B-52
X5100 LED 3 Board B-53
X7100 HDD & ODD Board B-54
X7100 CIR B-55
X7100 LED Board B-56
X7100 Click Board B-57
X7100 Fingerprint Board B-58

Updating the FLASH ROM BIOS..... C-1

To update the FLASH ROM BIOS you must: C-1
Download the BIOS C-1
Unzip the downloaded files to a bootable CD/DVD/ or USB Flash drive C-1
Set the computer to boot from the external drive C-1
Use the flash tools to update the BIOS C-2
Restart the computer (booting from the HDD) C-2

Chapter 1: Introduction

Overview

This manual covers the information you need to service or upgrade the ***P170HM*** series notebook computer. Information about operating the computer (e.g. getting started, and the *Setup* utility) is in the *User's Manual*. Information about drivers (e.g. VGA & audio) is also found in *User's Manual*. That manual is shipped with the computer.

Operating systems (e.g. *Windows Vista*, *Windows 7*, etc.) have their own manuals as do application software (e.g. word processing and database programs). If you have questions about those programs, you should consult those manuals.

The ***P170HM*** series notebook is designed to be upgradeable. See ***Disassembly on page 2 - 1*** for a detailed description of the upgrade procedures for each specific component. Please note the warning and safety information indicated by the "🔔" symbol.

The balance of this chapter reviews the computer's technical specifications and features.

Specifications

Latest Specification Information

The specifications listed here are correct at the time of sending them to the press. Certain items (particularly processor types/speeds) may be changed, delayed or updated due to the manufacturer's release schedule. Check with your service center for more details.

CPU

The CPU is not a user serviceable part. Accessing the CPU in any way may violate your warranty.

Processor Options

Intel® Core™ i7 Processor Extreme Edition
i7-2920XM (2.50GHz)
8MB L3 Cache, 32nm, DDR3-1600MHz, TDP 55W
Intel® Core™ i7 Processor
i7-2820QM (2.30GHz)
8MB L3 Cache, 32nm, DDR3-1600MHz, TDP 45W
i7-2720QM (2.20GHz) , i7-2630QM (2.0GHz)
6MB L3 Cache, 32nm, DDR3-1600MHz, TDP 45W
i7-2520M (2.50GHz)
3MB L3 Cache, 32nm, DDR3-1333MHz, TDP 35W

Memory

*****Four 204 Pin SO-DIMM Sockets Supporting DDR3 1333/ 1600** MHz Memory Modules
Memory Expandable up to 16GB
Compatible with 2GB or 4GB Modules

*****Note: Four SO-DIMMs are only supported by Quad-Core CPUs; Dual-Core CPUs support two SO-DIMMs maximum
**Note: 1600 MHz Memory Modules are only supported by Quad-Core CPUs to a maximum of two SO-DIMMs

LCD

17.3" (43.94cm) FHD (1920 * 1080)

BIOS

AMI BIOS (32Mb SPI Flash-ROM)

Storage

(**Factory Option**) One Changeable 12.7mm(h) Optical Device Type Drive (Super Multi Drive Module or Blu-Ray Combo Drive Module)
Two Changeable 2.5" 9.5 mm (h) SATA (Serial) Hard Disk Drives supporting RAID level 0/1/Recovery

Security

Security (Kensington® Type) Lock Slot
BIOS Password
(**Factory Option**) Fingerprint Reader Module

Core Logic

Intel® HM67 Chipset

Video Adapter

nVIDIA® GeForce GTX 485M PCIe Video Card
2GB GDDR5 Video RAM on board
Microsoft DirectX® 11 Compatible
nVIDIA® GeForce GTX 470M PCIe Video Card
1.5GB GDDR5 Video RAM on board
Microsoft DirectX® 11 Compatible
nVIDIA® GeForce GTX 460M PCIe Video Card
1.5GB GDDR5 Video RAM on board
Microsoft DirectX® 11 Compatible

Audio

High Definition Audio Compliant Interface
THX TruStudio Pro
S/PDIF Digital Output
One (3W) Sub Woofer
Built-In Microphone
5 Speakers

Pointing Device

Built-in TouchPad (scrolling key functionality integrated)

Keyboard

Full-size “WinKey” keyboard with numeric keypad

Communication

Built-In Giga Base-TX Ethernet LAN
2.0M Pixel USB PC Camera Module

(**Factory Option**) TV Tuner Mini-Card Module (**Model C Only**)

(**Factory Option**) Intel® WiFi Link 6230 (802.11a/g/n) Wireless LAN + Bluetooth 3.0 Half Mini-Card Combo Module
(**Factory Option**) Intel® WiFi Link 6300 (802.11a/g/n) Wireless LAN Half Mini-Card Module
(**Factory Option**) Third-Party Wireless LAN (802.11b/g/n) + Bluetooth 3.0 Half Mini-Card Combo Module
(**Factory Option**) Third-Party 802.11b/g/n Wireless LAN Half Mini-Card Module

Card Reader

Embedded Multi-In-1 Card Reader
MMC (MultiMedia Card) / RS MMC
SD (Secure Digital) / Mini SD / SDHC/ SDXC
MS (Memory Stick) / MS Pro / MS Duo

Interface

Two USB 3.0 Ports

Two USB 2.0 Ports (Note one USB 2.0 port can supply power when the system is off but still powered by the AC/DC adapter - see ***page 11***.)

One eSATA & USB 2.0 Combo Port

One HDMI-Out Port

One DVI-Out Port

One IEEE1394a Port

One S/PDIF-Out & Surround-Out Combo Jack

One Headphone/Speaker-Out Jack

One Microphone-In Jack

One Line-In Jack

One RJ-45 LAN Jack

One DC-In Jack

One Infrared Receiver for Optional TV Tuner Remote Control

One CATV Antenna Jack (for Optional TV Tuner)

Note: External 7.1CH Audio Output Supported by Headphone, Microphone, Line-In and Surround-Out Jacks

Mini Card Slots

Slot 1 for **WLAN** Module or **Combo WLAN and Bluetooth** Module

(**Factory Option**) Slot 2 for **TV Tuner** Module

Environmental Spec

Temperature

Operating: 5°C - 35°C

Non-Operating: -20°C - 60°C

Relative Humidity

Operating: 20% - 80%

Non-Operating: 10% - 90%

Power

Removable 8-cell cylinder battery, 76.96Wh (5200mAh)

Full Range AC/DC Adapter

AC Input: 100 - 240V, 50 - 60Hz

DC Output: 19V, 11.57A (**220W**)

Dimensions & Weight

412mm (w) * 276mm (d) * 41.8-45.4mm (h)

Around 3.9kg with Battery and ODD

External Locator - Top View with LCD Panel Open

Figure 1
Top View

1. PC Camera
2. LCD
3. LED Status Indicators
4. Power Button
5. Speakers
6. Keyboard
7. Built-In Microphone
8. TouchPad and Buttons
9. Fingerprint Reader (**Optional**)

External Locator - Front & Right side Views

Figure 2
Front Views

1. Consumer Infrared Receiver
2. LED Indicators

Figure 3
Right Side Views

1. Optical Device Drive Bay
2. Headphone Jack
3. Microphone Jack
4. S/PDIF-Out Jack
5. Line-In Jack
6. 1 * USB 2.0 Port

External Locator - Left Side & Rear View

Figure 4
Left Side View

1. RJ-45 LAN Jack
2. 2 * USB 3.0 Ports
3. 1 * USB 2.0 Port
4. Mini-IEEE 1394a Port
5. Multi-in-1 Card Reader
6. CATV Antenna Jack

Figure 5
Rear View

1. Vent/Fan Intake
2. eSATA/USB 2.0 Combo Port
3. HDMI-Out Port
4. DVI-Out Port
5. DC-In Jack
6. Security Lock Slot

External Locator - Bottom View

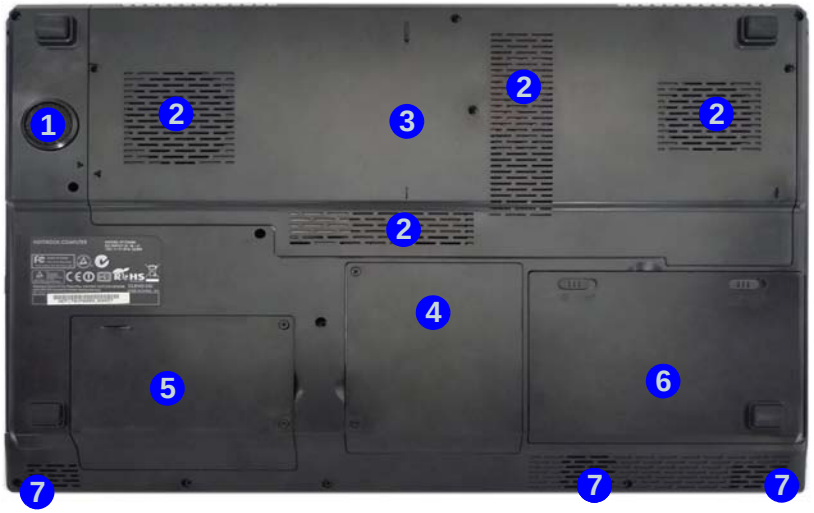

Figure 6
Bottom View

1. Sub Woofer
2. Fan Outlet/Intake
3. Component Bay Cover
4. Primary HDD Bay
5. Secondary HDD Bay
6. Battery
7. Speakers

Overheating

To prevent your computer from overheating make sure nothing blocks the vent/fan intakes while the computer is in use.

Mainboard Overview - Top (Key Parts)

Figure 7
Mainboard Top Key Parts

1. Platform Controller Hub
2. Audio Codec
3. KBC ITE IT8519E

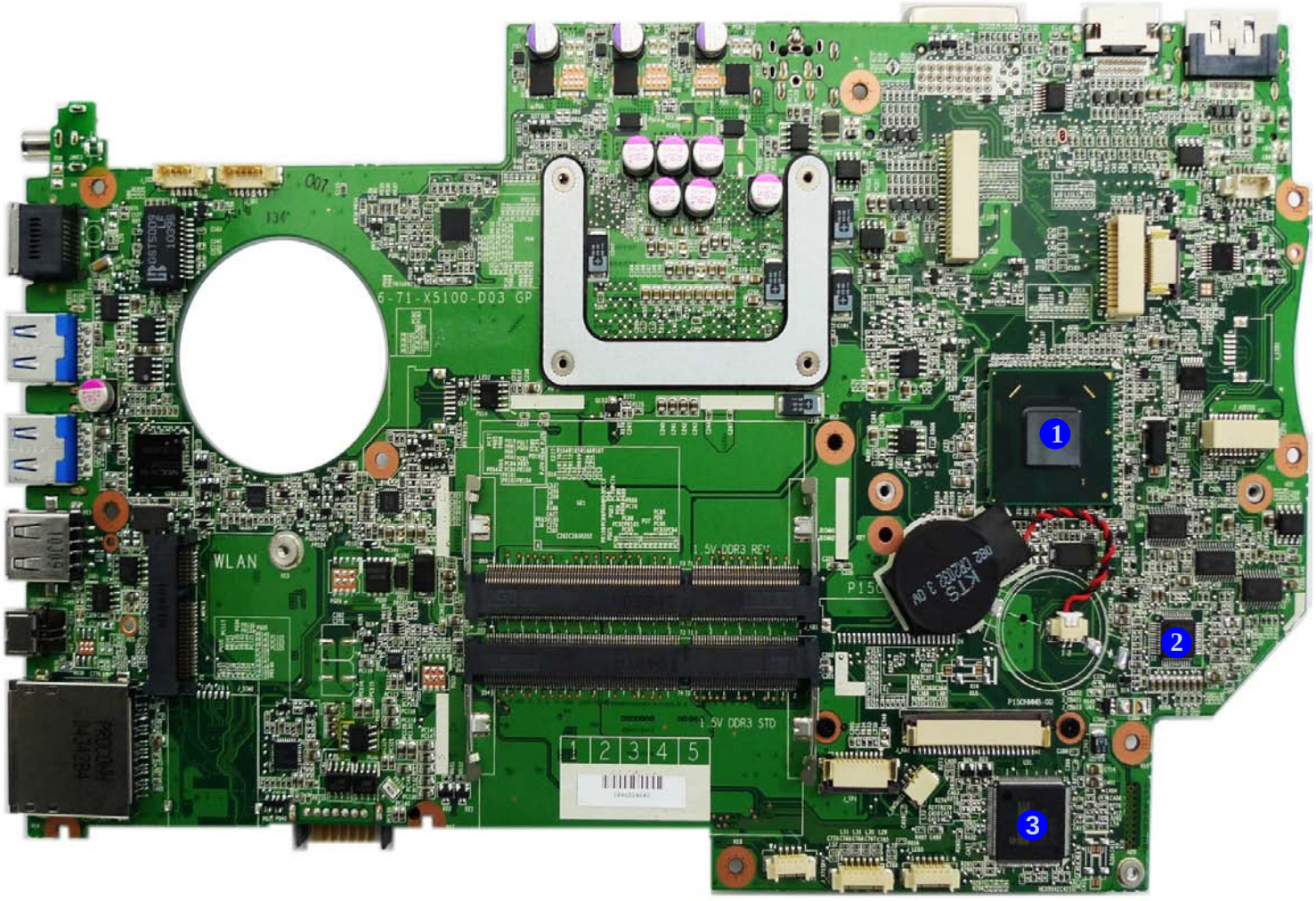

Mainboard Overview - Bottom (Key Parts)

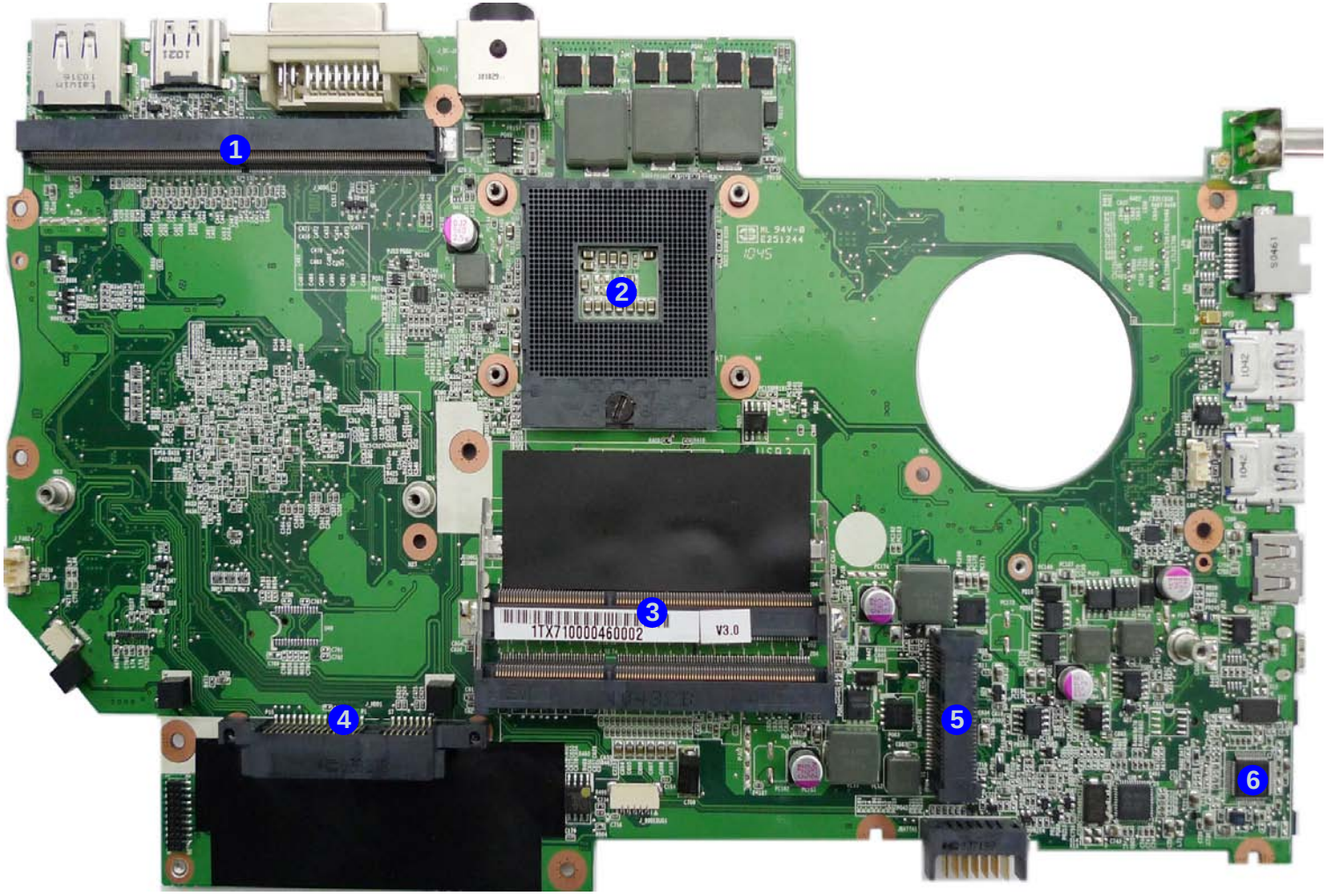

Figure 8
Mainboard Bottom Key Parts

1. VGA-Card Connector
2. CPU Socket (no CPU installed)
3. Memory Slots DDR3 SO-DIMM
4. Hard Disk Connector
5. Mini-Card Connector (3G Module)
6. JMC 251C

Mainboard Overview - Top (Connectors)

Figure 9
Mainboard Top Connectors

1. CCD Connector
2. USB 2.0 Port
3. Mini-IEEE 1394a Port
4. Multi-in-1 Card Reader
5. TouchPad Cable Connector
6. Microphone Cable Connector
7. Keyboard Cable Connector
8. CMOS Battery Connector
9. Audio Cable Connector
10. LCD Cable Connector 2
11. LCD Cable Connector 1

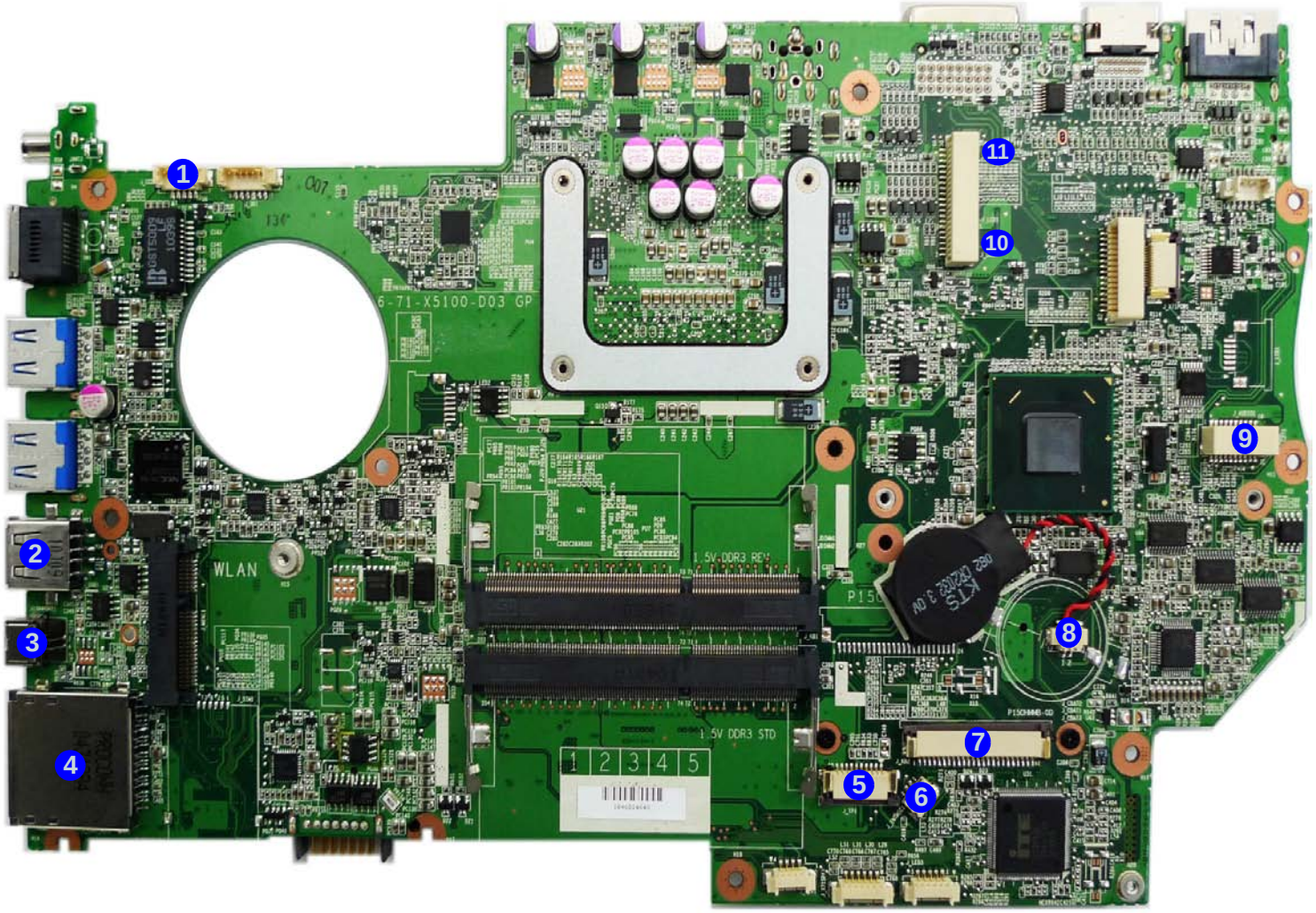

Mainboard Overview - Bottom (Connectors)

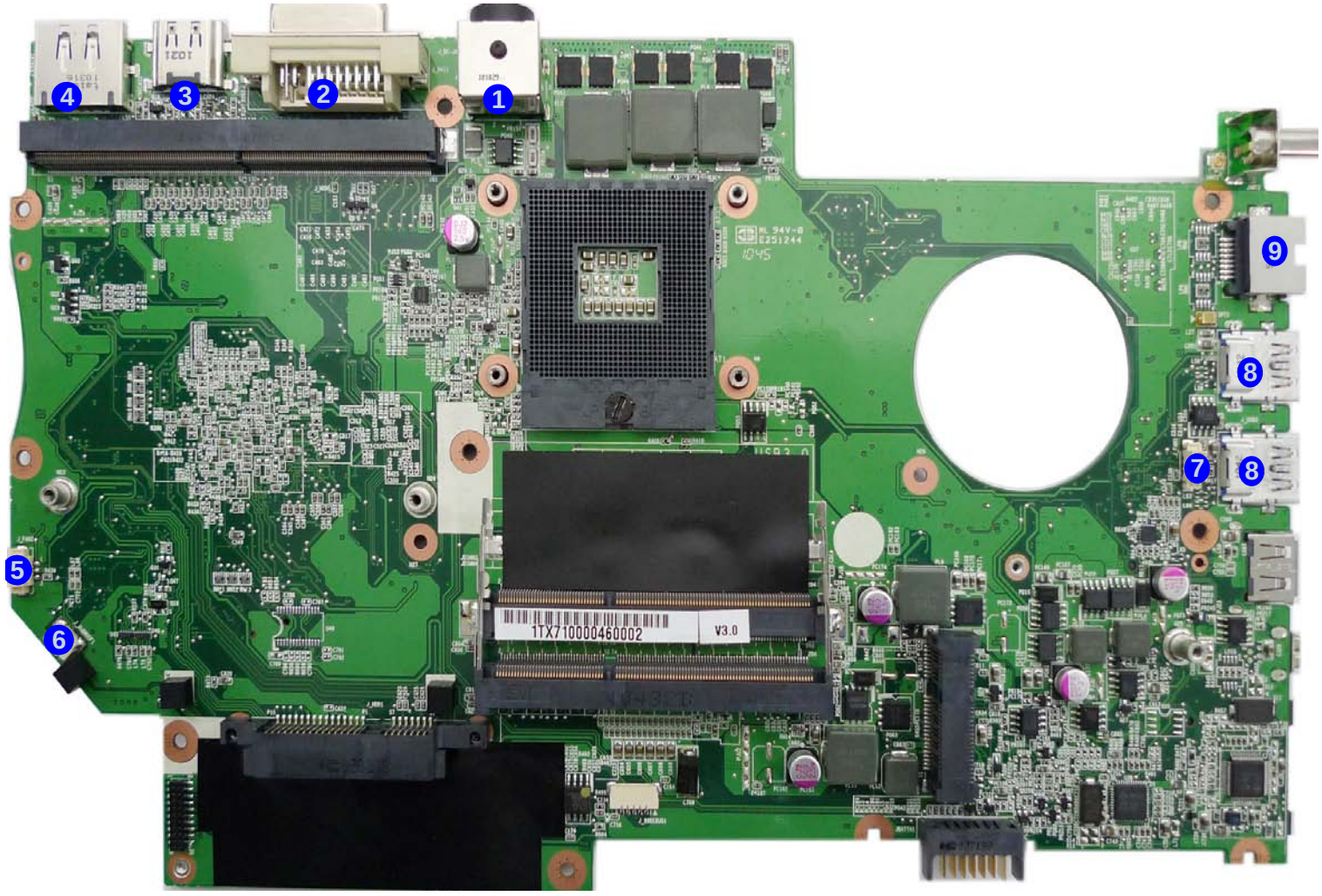

Figure 10
Mainboard Bottom Connectors

1. DC-In Jack
2. DVI-Out Port
3. HDMI-Out Port
4. eSATA/USB 2.0 Combo Port
5. VGA Fan Cable Connector
6. Sub Woofer Cable Connector
7. CPU Fan Cable Connector
8. USB 3.0 Ports
9. RJ-45 LAN Jack

Chapter 2: Disassembly

Overview

This chapter provides step-by-step instructions for disassembling the ***P170HM*** series notebook's parts and subsystems. When it comes to reassembly, reverse the procedures (unless otherwise indicated).

We suggest you completely review any procedure before you take the computer apart.

Procedures such as upgrading/replacing the RAM, optical device and hard disk are included in the User's Manual but are repeated here for your convenience.

To make the disassembly process easier each section may have a box in the page margin. Information contained under the figure # will give a synopsis of the sequence of procedures involved in the disassembly procedure. A box with a lists the relevant parts you will have after the disassembly process is complete. **Note**: The parts listed will be for the disassembly procedure listed ONLY, and not any previous disassembly step(s) required. Refer to the part list for the previous disassembly procedure. The amount of screws you should be left with will be listed here also.

A box with a will also provide any possible helpful information. A box with a contains warnings.

An example of these types of boxes are shown in the sidebar.

Information

Warning

NOTE: All disassembly procedures assume that the system is turned **OFF**, and disconnected from any power supply (the battery is removed too).

Maintenance Tools

The following tools are recommended when working on the notebook PC:

- M3 Philips-head screwdriver
- M2.5 Philips-head screwdriver (magnetized)
- M2 Philips-head screwdriver
- Small flat-head screwdriver
- Pair of needle-nose pliers
- Anti-static wrist-strap

Connections

Connections within the computer are one of four types:

Locking collar sockets for ribbon connectors	To release these connectors, use a small flat-head screwdriver to gently pry the locking collar away from its base. When replacing the connection, make sure the connector is oriented in the same way. The pin1 side is usually not indicated.
Pressure sockets for multi-wire connectors	To release this connector type, grasp it at its head and gently rock it from side to side as you pull it out. Do not pull on the wires themselves. When replacing the connection, do not try to force it. The socket only fits one way.
Pressure sockets for ribbon connectors	To release these connectors, use a small pair of needle-nose pliers to gently lift the connector away from its socket. When replacing the connection, make sure the connector is oriented in the same way. The pin1 side is usually not indicated.
Board-to-board or multi-pin sockets	To separate the boards, gently rock them from side to side as you pull them apart. If the connection is very tight, use a small flat-head screwdriver - use just enough force to start.

Maintenance Precautions

The following precautions are a reminder. To avoid personal injury or damage to the computer while performing a removal and/or replacement job, take the following precautions:

1. **Don't drop it**. Perform your repairs and/or upgrades on a stable surface. If the computer falls, the case and other components could be damaged.
2. **Don't overheat it**. Note the proximity of any heating elements. Keep the computer out of direct sunlight.
3. **Avoid interference**. Note the proximity of any high capacity transformers, electric motors, and other strong magnetic fields. These can hinder proper performance and damage components and/or data. You should also monitor the position of magnetized tools (i.e. screwdrivers).
4. **Keep it dry**. This is an electrical appliance. If water or any other liquid gets into it, the computer could be badly damaged.
5. **Be careful with power**. Avoid accidental shocks, discharges or explosions.
   - Before removing or servicing any part from the computer, turn the computer off and detach any power supplies.
   - When you want to unplug the power cord or any cable/wire, be sure to disconnect it by the plug head. Do not pull on the wire.
6. **Peripherals** – Turn off and detach any peripherals.
7. **Beware of static discharge**. ICs, such as the CPU and main support chips, are vulnerable to static electricity. Before handling any part in the computer, discharge any static electricity inside the computer. When handling a printed circuit board, do not use gloves or other materials which allow static electricity buildup. We suggest that you use an anti-static wrist strap instead.
8. **Beware of corrosion**. As you perform your job, avoid touching any connector leads. Even the cleanest hands produce oils which can attract corrosive elements.
9. **Keep your work environment clean**. Tobacco smoke, dust or other air-born particulate matter is often attracted to charged surfaces, reducing performance.
10. **Keep track of the components**. When removing or replacing any part, be careful not to leave small parts, such as screws, loose inside the computer.

Power Safety Warning

Before you undertake any upgrade procedures, make sure that you have turned off the power, and disconnected all peripherals and cables (including telephone lines). It is advisable to also remove your battery in order to prevent accidentally turning the machine on.

Cleaning

Do not apply cleaner directly to the computer, use a soft clean cloth.
Do not use volatile (petroleum distillates) or abrasive cleaners on any part of the computer.

Disassembly Steps

The following table lists the disassembly steps, and on which page to find the related information. **PLEASE PERFORM THE DISASSEMBLY STEPS IN THE ORDER INDICATED.**

To remove the Battery:

1. Remove the battery *page 2 - 5*

To remove the HDD from the Primary Bay:

1. Remove the battery *page 2 - 5*
2. Remove the HDD *page 2 - 6*

To remove the Optical Device:

1. Remove the battery *page 2 - 5*
2. Remove the Optical device *page 2 - 9*

To remove the HDD from the Secondary Bay:

1. Remove the battery *page 2 - 5*
2. Remove the HDD *page 2 - 10*

To remove the Primary System Memory:

1. Remove the battery *page 2 - 5*
2. Remove the system memory *page 2 - 12*

To remove the System Memory Under the Keyboard:

1. Remove the battery *page 2 - 5*
2. Remove the keyboard *page 2 - 14*
3. Remove the system memory *page 2 - 15*

To remove the WLAN Module:

1. Remove the battery *page 2 - 5*
2. Remove the keyboard *page 2 - 14*
3. Remove the wireless LAN *page 2 - 16*

To remove and install a Processor:

1. Remove the battery *page 2 - 5*
2. Remove the processor *page 2 - 17*
3. Install the processor *page 2 - 19*

To remove and install a Video Card:

1. Remove the battery *page 2 - 5*
2. Remove the video card *page 2 - 20*
3. Install the video card *page 2 - 21*

To remove the TV Tuner:

1. Remove the battery *page 2 - 5*
2. Remove the TV tuner *page 2 - 22*
3. Install the TV tuner *page 2 - 23*

To remove the Microphone:

1. Remove the battery *page 2 - 5*
2. Remove the HDD *page 2 - 6*
3. Remove the Optical device *page 2 - 9*
4. Remove the HDD *page 2 - 10*
5. Remove the system memory *page 2 - 12*
6. Remove the processor *page 2 - 17*
7. Remove the video card *page 2 - 20*
8. Remove the TV tuner *page 2 - 22*9.
9. Remove the microphone *page 2 - 24*

Removing the Battery

1. Turn the computer **off**, and turn it over.
2. Slide the latch 1 in the direction of the arrow (***Figure 1a***).
3. Slide the latch 2 in the direction of the arrow, and hold it in place (***Figure 1a***).
4. Lift the battery 3 out in the direction of the arrow 4 (***Figure 1b & Figure 1c***).

Figure 1
Battery Removal

a. Slide the latch and hold in place.
b. Slide the battery in the direction of the arrow.
c. Lift the battery out in the direction of the arrow.

a.

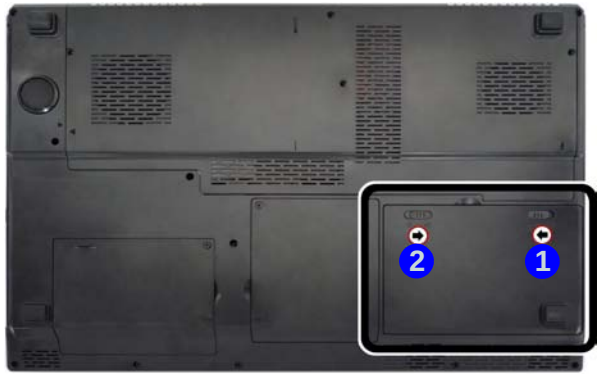

b.

c.

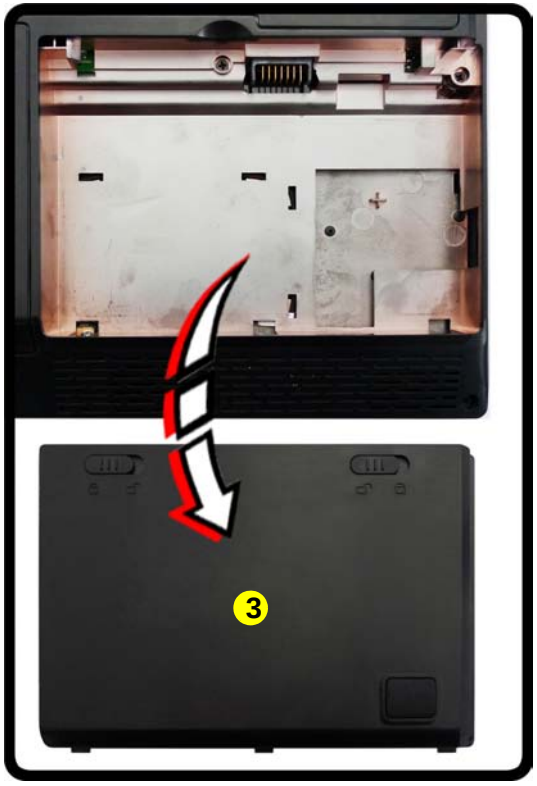

3. Battery

Figure 2
HDD Assembly Removal

a. Locate the HDD bay cover and remove the screws.
b. Remove the hard disk bay cover by levering the cover at point 3.

Removing the Hard Disk Drive

The hard disk drive can be taken out to accommodate other 2.5" serial (SATA) hard disk drives with a height of 9.5mm (h). Follow your operating system's installation instructions, and install all necessary drivers and utilities (as outlined in **Chapter 4 of the User's Manual**) when setting up a new hard disk.

Hard Disk Upgrade Process

1. Turn **off** the computer, and remove the battery (*page 2 - 5*).
2. Locate the hard disk bay cover and remove screws 1 - 2 (*Figure 2a*).
3. Remove the hard disk bay cover 4 by levering the cover at point 3 (*Figure 2b*).

a.

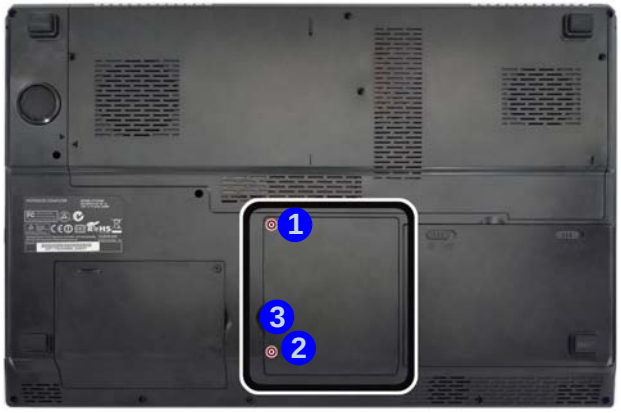

b.

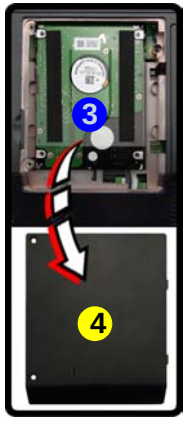

4.Hard Disk Bay Cover

- 2 Screws

HDD System Warning

New HDD's are blank. Before you begin make sure:

You have backed up any data you want to keep from your old HDD.

You have all the CD-ROMs and FDDs required to install your operating system and programs.

If you have access to the internet, download the latest application and hardware driver updates for the operating system you plan to install. Copy these to a removable medium.

4. Slide the HDD assembly in the direction of the arrow 4 (*Figure 3c*).
5. Remove the hard disk assembly 5 (*Figure 3d*).
6. Remove screws 6 & 7 and the insulation plate 8 (*Figure 3e*).
7. Reverse the process to install a new hard disk (do not forget to replace all the screws and covers).

Figure 3
HDD Assembly Removal (cont'd.)

c. Slide the HDD assembly in the direction of the arrow.
d. Remove the hard disk assembly.
e. Remove the screws and the insulation plate.

c.

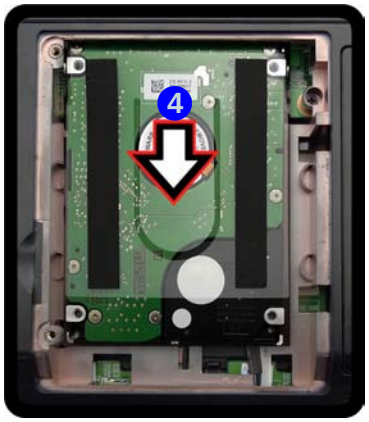

d.

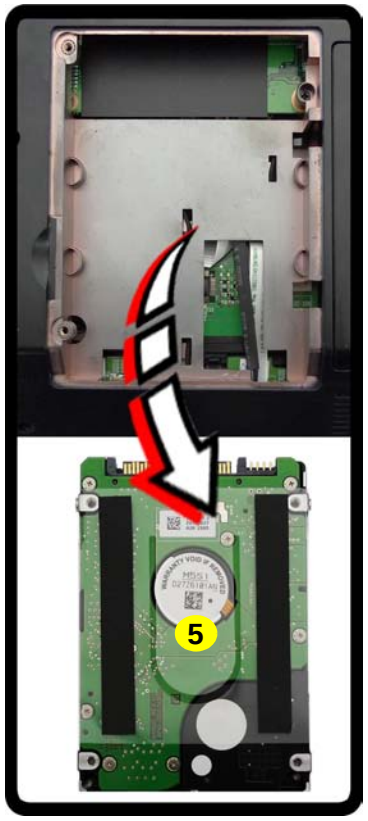

e.

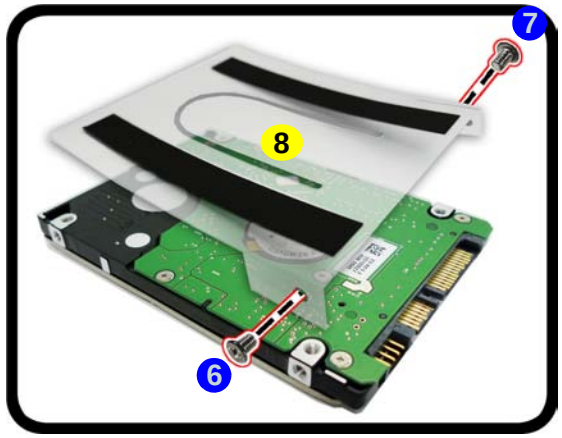

5. HDD
8. HDD Insulation Plate

- 2 Screws

Inserting the Hard Disk Into the HDD Bay

Figure 4
Inserting the Hard Disk Into the HDD Bay

1. Make sure the HDD assembly is aligned with the black taped area 1 (***Figure 4a***).
2. When aligned, carefully insert the HDD assembly 2 into the case so that the connectors line up (***Figure 4a***).
3. Replace the hard disk bay covers and screws.

a. Make sure the HDD assembly is aligned with the black taped area. When aligned, carefully insert the HDD assembly into the case so that the connectors line up.

a.

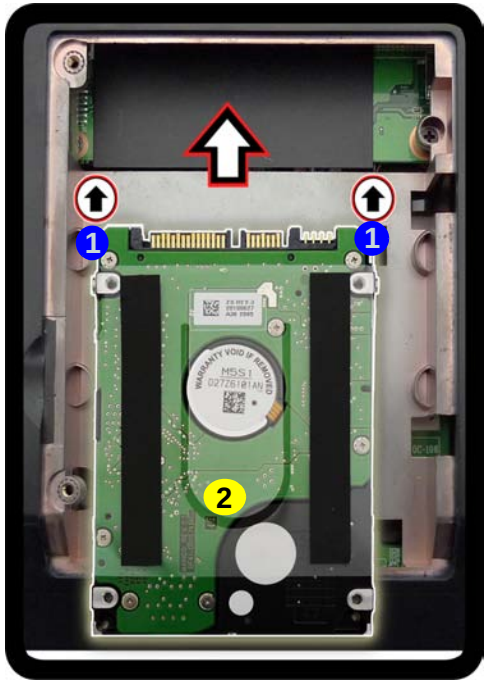

2. HDD

Removing the Optical (CD/DVD) Device

1. Turn **off** the computer, and remove the battery (*page 2 - 5*).
2. Locate the **secondary** hard disk bay cover and remove screws 1 & 2 (*Figure 5a*).
3. Remove the hard disk bay cover 3 (*Figure 5b*).
4. Remove the screw at point 4 (*Figure 5c*), and use a screwdriver to carefully push out the optical device 5 out of the bay at point 6 (*Figure 5d*).
5. Reverse the process to install any new optical (CD/DVD) device.

a.

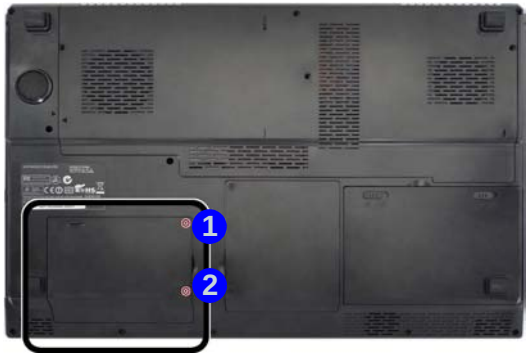

b.

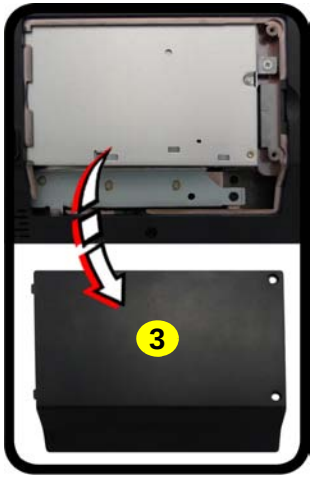

c.

d.

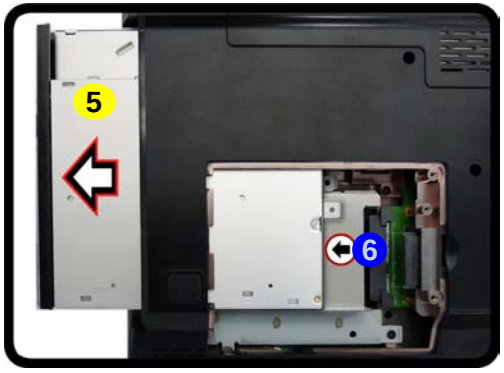

Figure 5
Optical Device Removal

a. Locate the secondary hard disk bay cover and remove the screws.
b. Remove the cover.
c. Remove the screw.
d. Push the optical device out off the computer at point 6.

3. Secondary HDD Bay Cover
5. Optical Device

- 3 Screws

Figure 6
Secondary HDD Assembly Removal

a. Remove the screws from the secondary HDD assembly.
b. Slide the secondary HDD assembly in the direction of the arrow.
c. Lift the secondary HDD assembly up and out of the bay.

Removing the Hard Disk from the Secondary HDD Bay

Note that the **secondary** hard disk (if installed) is located under the optical device bay (CD/DVD).

1. Turn **off** the computer, and turn it over, remove the battery (***page 2 - 5***) and optical device (***page 2 - 9***).
2. Remove screws 1 - 3 from the secondary HDD assembly (***Figure 6a***).
3. Slide the secondary HDD assembly in the direction of the arrow 4 (it will not move fully out of the bay ***Figure 6a***).
4. Lift the secondary HDD assembly 5 up and out of the bay (in the reverse direction of the arrow 4 ***Figure 6c***).

a.

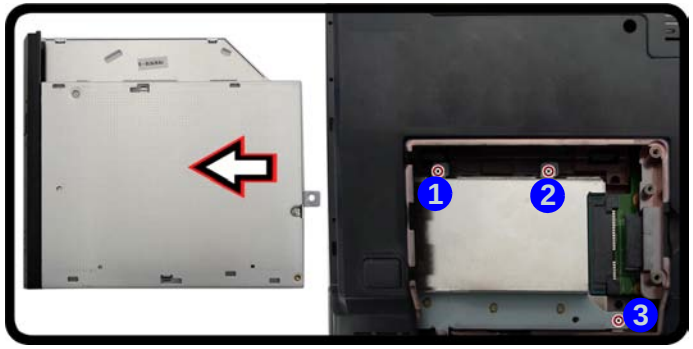

c.

b.

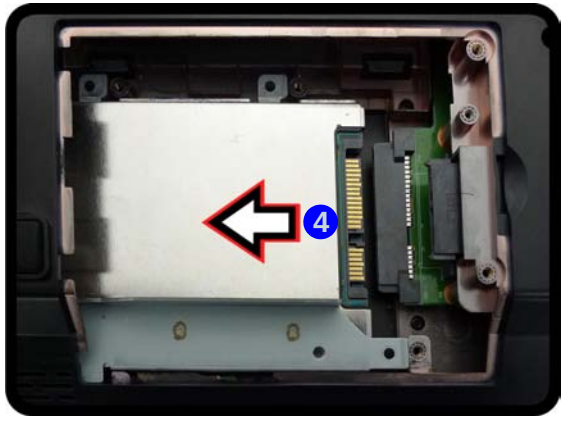

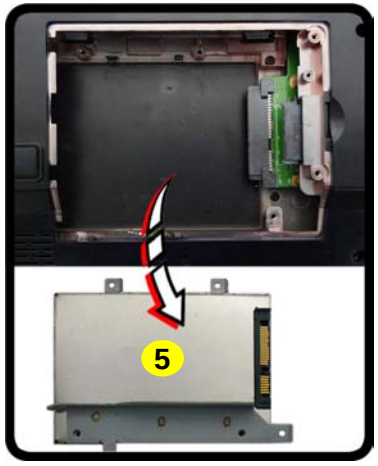

5. Hard Disk Assembly

- 3 Screws

5. Remove screws 6 - 9 and the insulation plate 10 (*Figure 7d*).

d.

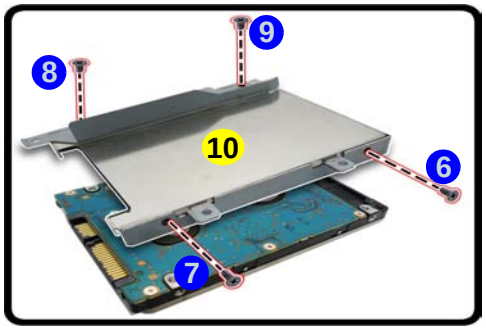

Figure 7
Secondary HDD Assembly Removal

d. Remove the screws and the insulation plate.

6. Reverse the process to install a new disk (make sure you install the insulation plate).
7. Slide the HDD assembly into the bay at an angle as illustrated.
8. Make sure the insulation plate slides under the HDD bay guide at point 11.
9. Slide the assembly in the direction of the arrow 12 and secure the assembly with the screws.

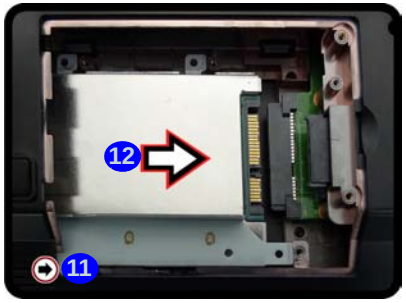

10. HDD Insulation Plate

- 4 Screws

Figure 8
RAM Module Removal

a. Remove the screws.
b. Slide the bottom cover until the cover and case indicators are aligned.

Removing the Primary System Memory (RAM)

The computer has **four** memory sockets for 204 pin Small Outline Dual In-line (SO-DIMM) **DDR III (DDR3)** type memory modules (see ***"Memory" on page C - 2***). The total memory size is automatically detected by the POST routine once you turn on your computer.

Note that **four SO-DIMMs are only supported by Quad-Core CPUs**; **Dual-Core CPUs support two SO-DIMMs maximum (see *"Memory" on page C - 2* for full details).**

Two primary memory sockets are located under component bay cover (the bottom case cover), and two secondary memory sockets are located under the keyboard (not user upgradable). If you are installing only two RAM modules then they should be installed in the primary memory sockets under the component bay cover.

Note that the RAM located under the keyboard is not user upgradable. Contact your service center for more information if you wish to upgrade the memory in the secondary memory sockets.

Memory Upgrade Process

1. Turn **off** the computer, and turn it over, remove the battery (***page 2 - 5***).
2. Remove screws 1 - 4 (***Figure 8a***).
3. Slide the bottom cover until the cover and case indicators 5 are aligned (***Figure 8b***).

a.

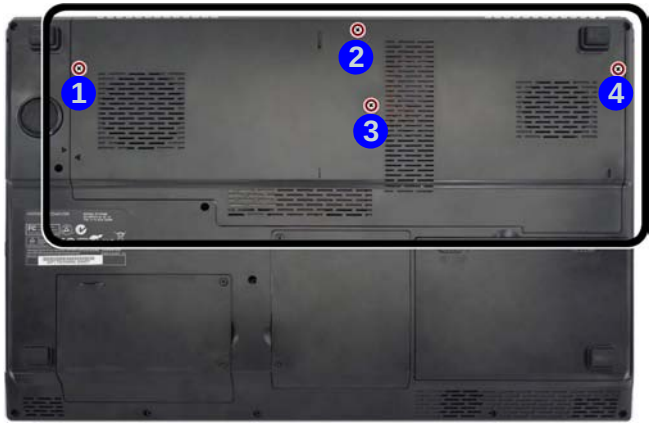

b.

- 4 Screws

4. Lift the component bay cover 6 off the computer case. The modules will be visible at point 7 (*Figure 9c*).
5. Gently pull the two release latches (8 & 9) on the sides of the memory socket(s) in the direction indicated below (*Figure 9d*).
6. The RAM module 10 will pop-up, and you can remove it (*Figure 9e*).
7. Pull the latches to release the second module if necessary.
8. Insert a new module holding it at about a 30° angle and fit the connectors firmly into the memory slot.
9. The module's pin alignment will allow it to only fit one way. Make sure the module is seated as far into the slot as it will go. DO NOT FORCE the module; it should fit without much pressure.
10. Press the module in and down towards the mainboard until the slot levers click into place to secure the module.
11. Replace the bay cover and screws.
12. Restart the computer to allow the BIOS to register the new memory configuration as it starts up.

Figure 9
RAM Module Removal (cont'd.)

c. Lift the component bay cover off the computer case. The modules will be visible at point 7.
d. Gently pull the two release latches on the sides of the memory socket(s) in the direction indicated below.
e. The RAM module will pop-up, and you can remove it.

c.

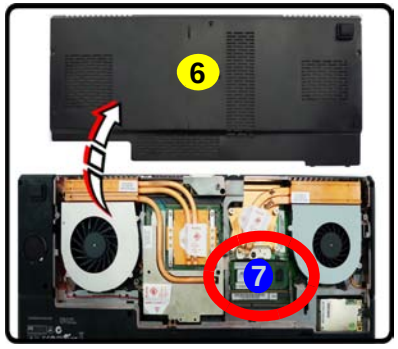

e.

d.

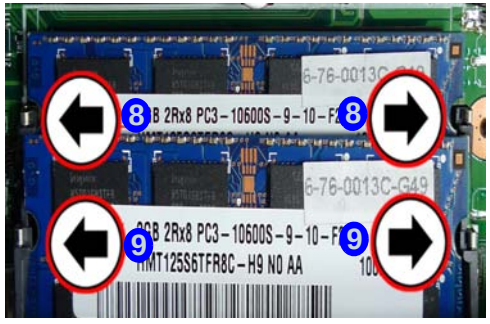

Contact Warning

Be careful not to touch the metal pins on the module's connecting edge. Even the cleanest hands have oils which can attract particles, and degrade the module's performance.

6. Component Bay Cover
10. RAM Module

Figure 10
RAM Module Removal

a. Remove the top cover module.
b. Remove the screws.
c. Carefully lift the keyboard up, being careful not to bend the keyboard ribbon cable.

Removing the System Memory (RAM) from Under the Keyboard

Memory Upgrade Process

1. Turn **off** the computer, and turn it over, remove the battery (***page 2 - 5***) and the component bay cover.
2. Remove the top cover module A (***Figure 10a***).
3. Remove screws 1 - 5 (***Figure 10a***).
4. Carefully lift the keyboard B up, being careful not to bend the keyboard ribbon cable 6 (***Figure 10c***).

a.

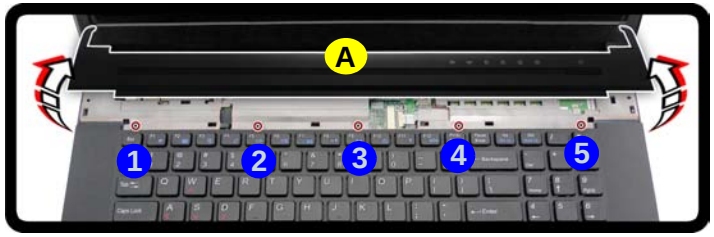

b.

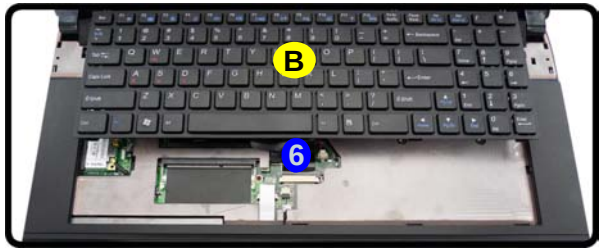

A. Top Cover Module
B. Keyboard

- 5 Screws

5. Disconnect the keyboard ribbon cable 6 from the locking collar socket 7 by using a small flat-head screwdriver to pry the locking collar pins 8 away from the base. (*Figure 11e*).
6. Remove the keyboard and the memory sockets 9 & 10 will be visible (*Figure 11f*).
7. Gently pull the two release latches (11 & 12) on the sides of the memory socket(s) in the direction indicated below (*Figure 11g*).
8. The RAM module 13 will pop-up, and you can remove it.
9. Pull the latches to release the second module if necessary.
10. Insert a new module holding it at about a 30° angle and fit the connectors firmly into the memory slot.
11. The module's pin alignment will allow it to only fit one way. Make sure the module is seated as far into the slot as it will go. DO NOT FORCE the module; it should fit without much pressure.
12. Press the module in and down towards the mainboard until the slot levers click into place to secure the module.
13. Replace the bay cover and screws.
14. Restart the computer to allow the BIOS to register the new memory configuration as it starts up.

e.

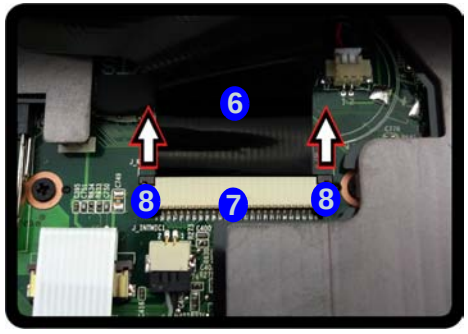

f.

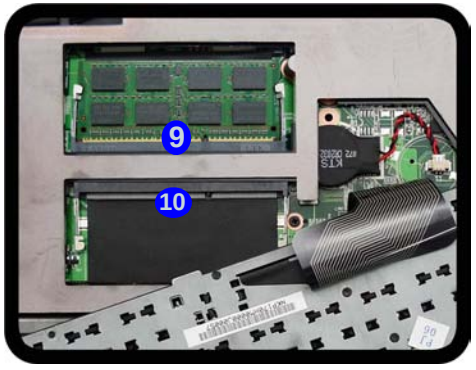

g.

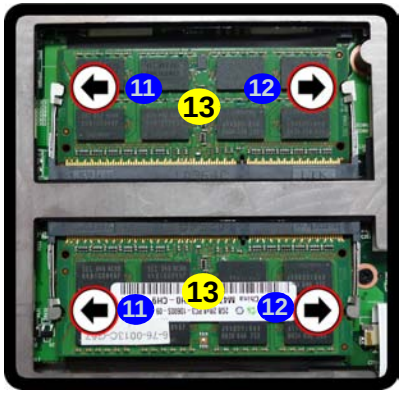

Contact Warning

Be careful not to touch the metal pins on the module's connecting edge. Even the cleanest hands have oils which can attract particles, and degrade the module's performance.

Figure 11
RAM Module Removal (cont'd.)

e. Disconnect the keyboard ribbon cable from the locking collar socket by using a small flat-head screwdriver to pry the locking collar pins away from the base.
f. Remove the keyboard and the memory sockets will be visible.
g. Gently pull the two release latches on the sides of the memory socket(s) in the direction indicated below.

13. RAM Modules

Figure 12
Wireless LAN Module Removal

a. The Wireless LAN module will be visible at point 1 under the keyboard
b. Disconnect the cables and remove the screw.
c. The WLAN module will pop up.
d. Lift the WLAN module out.

Removing the Wireless LAN Module

1. Turn **off** the computer, remove the battery (***page 2 - 5***) and the keyboard (***page 2 - 10***).
2. The Wireless LAN module will be visible at point 1 under the keyboard (***Figure 12a***).
3. Carefully disconnect cables 2 - 3, then remove screw 4 from the module socket (***Figure 12b***).
4. The Wireless LAN module 5 will pop-up (***Figure 12c***).
5. Lift the Wireless LAN module (***Figure 12d***) up and off the computer.

a.

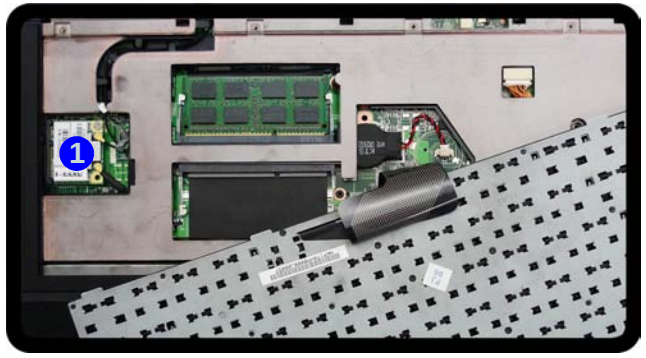

c.

b.

d.

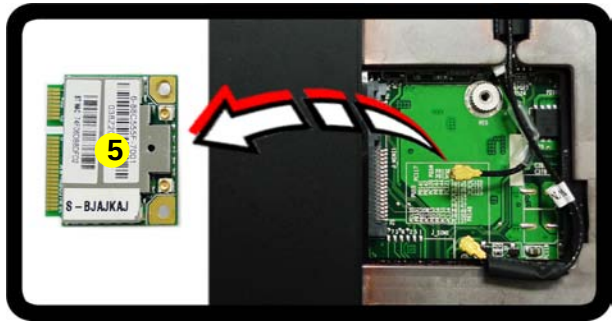

5. WLAN Module

- 1 Screw

Removing and Installing the Processor

Processor Removal Procedure

1. Turn **off** the computer, remove the battery (***page 2 - 5***), and component bay cover (***page 2 - 10***).
2. Remove screws 1 - 4 from the heat sink unit in the order indicated on the label (i.e screw 4 first through to screw 1 last ***Figure 13a***).
3. Carefully (it may be hot) remove the heat sink unit 5 (***Figure 13b***).

a.

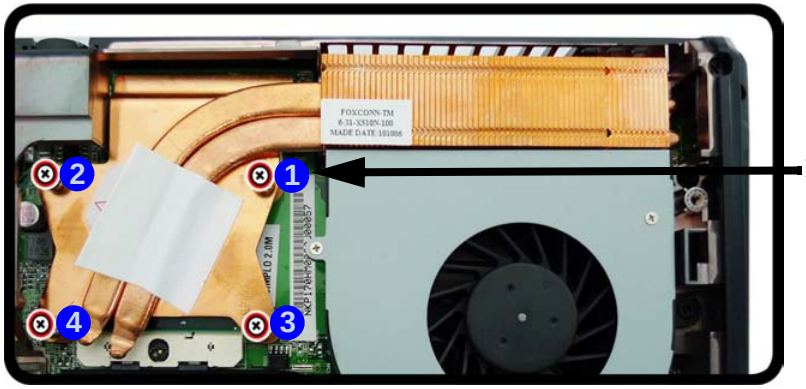

Note: Loosen the screws in the reverse order 4-3-2-1 as indicated on the label.

b.

Figure 13
Processor Removal Procedure

a. Remove the screws in the correct order.
b. Carefully remove the heat sink unit.

CPU Warning

In order to prevent damaging the contact pins when removing the CPU, it is necessary to first remove the WLAN module from the computer.

5. Heat Sink Unit

- 4 Screws

Figure 14
Processor Removal (cont'd)

c. Turn the release latch to unlock the CPU.
d. Lift the CPU out of the socket.

4. Turn the release latch 6 towards the unlock symbol 🔓, to release the CPU (***Figure 14c***).
5. Carefully (it may be hot) lift the CPU A up out of the socket (***Figure 14d***).
6. See ***page 2 - 19*** for information on inserting a new CPU.
7. When re-inserting the CPU, pay careful attention to the pin alignment, it will fit only one way (DO NOT FORCE IT!).

c.

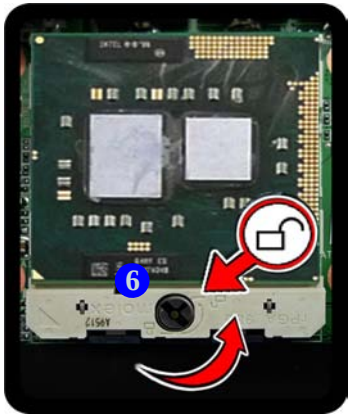

Unlock

Lock

d.

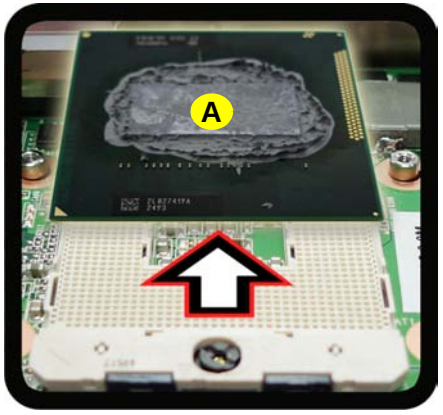

Caution

The heat sink, and CPU area in general, contains parts which are subject to high temperatures. Allow the area time to cool before removing these parts.

A. CPU

Processor Installation Procedure

1. Insert the CPU (A), pay careful attention to the pin alignment (***Figure 15a***), it will fit only one way (DO NOT FORCE IT!), and turn the release latch (B) towards the lock symbol (***Figure 15b***).
2. **Remove the sticker** (C) (***Figure 15c***) from the heat sink unit.
3. Insert the heat sink unit (D) as indicated in ***Figure 15c***.
4. Tighten the CPU heat sink screws in the order (1), (2), (3) & (4) (the order as indicated on the label and ***Figure 15d***).
5. Replace the CPU fan, component bay cover and tighten the screws (***page 2 - 17***).

Figure 15
Processor Installation

a. Insert the CPU.
b. Turn the release latch towards the lock symbol.
c. Remove the sticker from the heat sink unit and insert the heat sink.
d. Tighten the screws.

a.

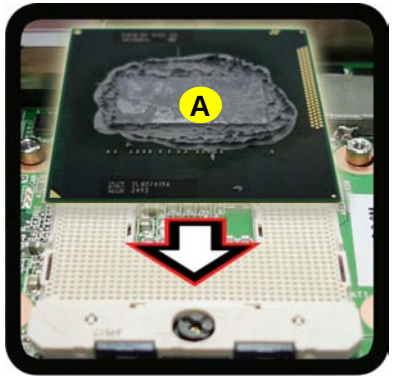

c.

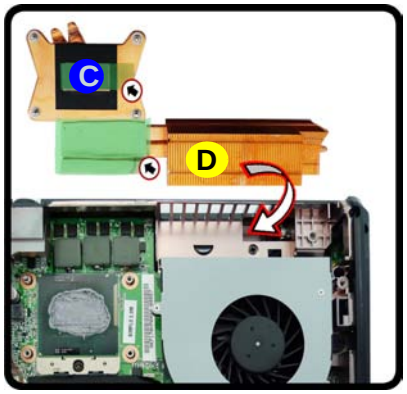

Note:

Tighten the screws in the order 1-2-3-4 as indicated on the label.

b.

d.

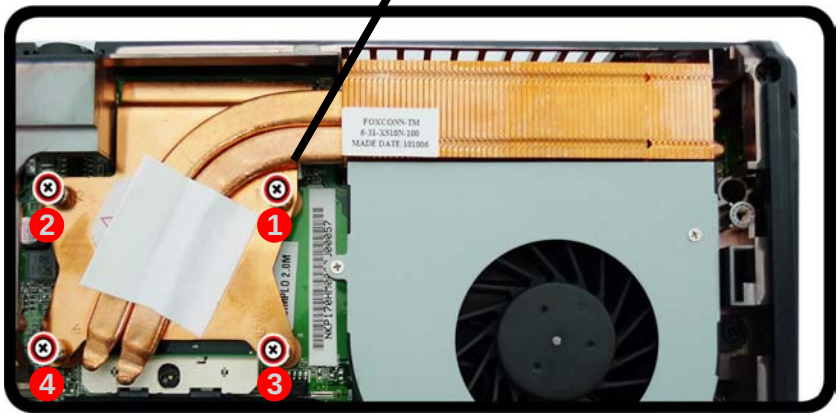

A. CPU
D. Heat Sink

- 4 Screws

Figure 16
Video Card Removal Procedure

a. Remove the screws in the correct order.
b. Carefully remove the heat sink units.
c. Remove the video card screws. The video card will pop up.
d. Remove the video card.

Removing and Installing the Video Card

Video Card Removal Procedure

1. Turn **off** the computer, turn it over and remove the battery (*page 2 - 5*) and component cover (*page 2 - 10*).
2. Remove screws 1 - 7 from the heat sink unit in the order indicated on the label (i.e screw **7** first through to screw **1** last) (*Figure 16a*).
3. Carefully (**they may be hot**) remove the heat sink units 8 & 9 (*Figure 16b*).
4. Remove screws 10 & 11 from the video card and the video card 12 will pop up (*Figure 16c*).
5. Remove the video card 12 (*Figure 16d*).

a.

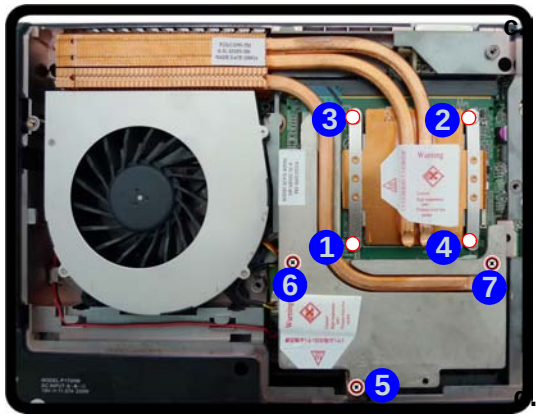

c.

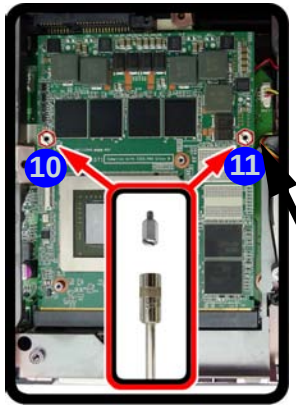

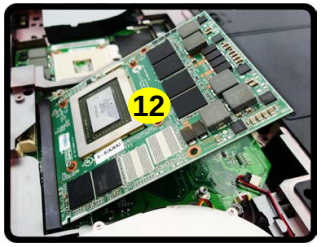

Note:

Please use a flat head screwdriver to remove screws 10 & 11.

b.

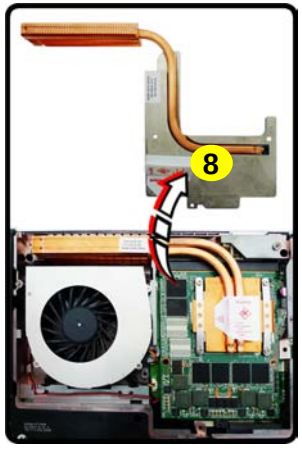

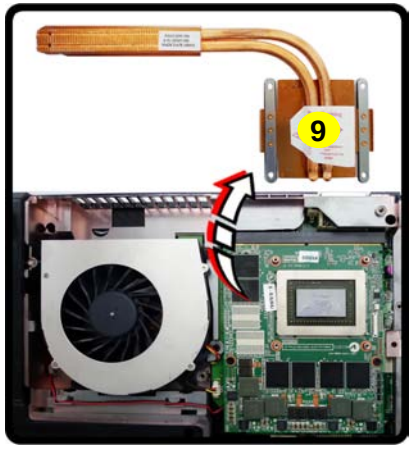

d.

Caution

The heat sink, and video card area in general, contains parts which are subject to high temperatures. Allow the area time to cool before removing these parts.

8 & 9.Heat Sink Units
12. Video Card

- 9 Screws

Heat Sink Screw Removal and Insertion

Remove the screws from the heat sink in the order indicated here: 7-**6-5-4-3-2-1**.

When tightening the screws, make sure that they are tightened in the order: **1-2-3-4-5-6-7**.

Installing a New Video Card

1. Prepare to fit the video card 12 into the slot by holding it at about a 30° angle (*Figure 17e*).
2. The card needs to be fully into the slot, and the video card and socket have a guide-key and pin which align to allow the card to fit securely (*Figure 17f*).
3. Fit the connectors firmly into the socket, straight and evenly.

e.

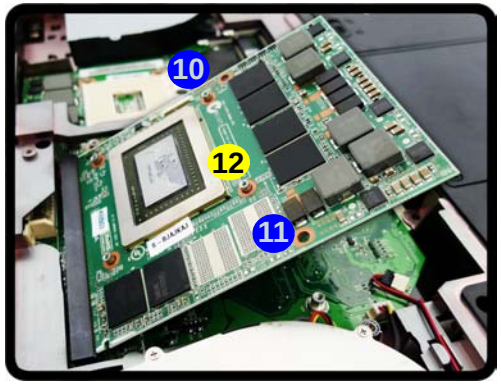

f.

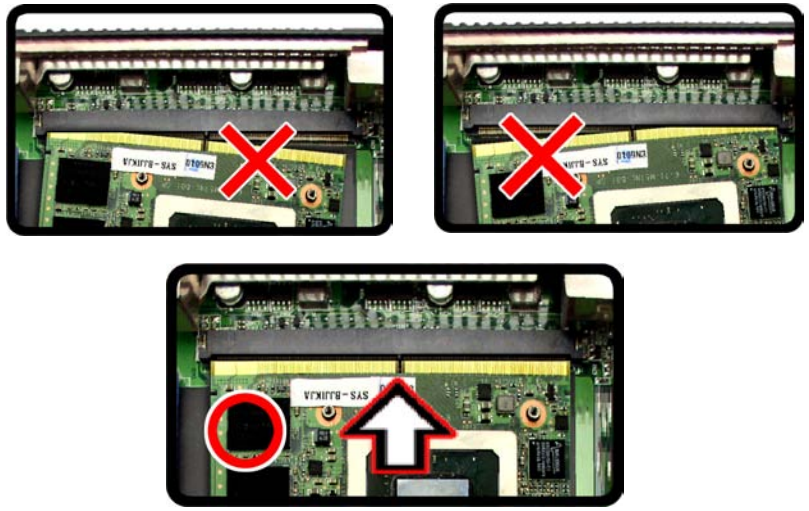

4. DO NOT attempt to push one end of the card in ahead of the other.
5. The card's pin alignment will allow it to only fit one way. **Make sure the module is seated as far into the socket as it will go** (none of the gold colored contact should be showing). DO NOT FORCE the card; it should fit without much pressure.
6. Secure the card with screws 10 & 11 (*Figure 17 on page 2 - 21*).
7. Place the heat sink back on the card, and secure the screws in the order indicated in *Figure 17 on page 2 - 21*.
8. Attach the video card fan and secure with the screws as indicated in *Figure 16 on page 2 - 20*.
9. Reinsert the component bay cover, and secure with the screws as indicated in *Figure 10 on page 2 - 14*.

Figure 17
Installing a New Video Card

e. Insert the video card at a 30 degree angle.
f. Fit the connectors straight and even.

Caution

The heat sink, and video card area in general, contains parts which are subject to high temperatures. Allow the area time to cool before removing these parts.

12. Video Card

- 2 Screws

Figure 18
TV Tuner Module Removal

a. The TV Tuner module will be visible at point 1.
b. Carefully disconnect the cable and remove the screw from the TV Tuner module.
c. The TV Tuner module will pop up.
d. Lift the TV Tuner module up and off the computer.

Removing and Installing the TV Tuner Module

TV Tuner Removal Procedure

1. Turn **off** the computer, turn it over and remove the battery (***page 2 - 5***) and component cover (***page 2 - 10***).
2. The TV Tuner module will be visible at point 1 (***Figure 18a***).
3. Carefully disconnect the cable 2 and remove the screw 3 from the TV Tuner module (***Figure 18b***).
4. The TV Tuner module 4 will pop up (***Figure 18c***).
5. Lift the TV Tuner module 4 up and off the computer (***Figure 18d***).

a.

c.

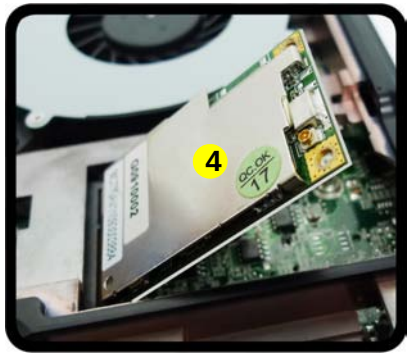

b.

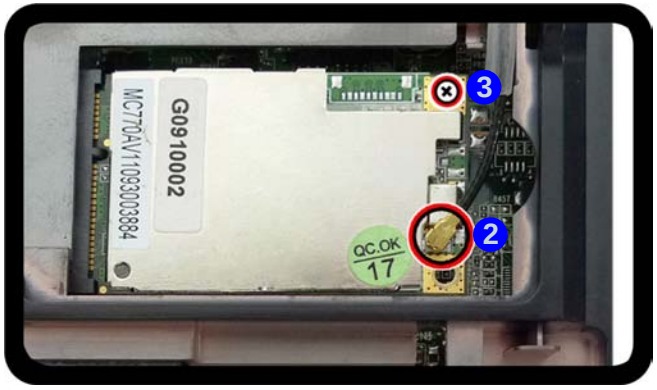

d.

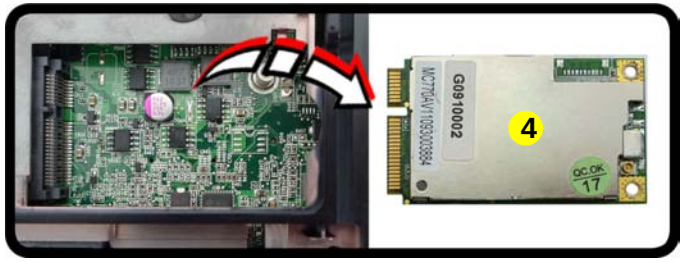

4. TV Tuner Module

- 1 Screw

TV Tuner Installation Procedure

1. Before installation, make sure that the other end of the cable is locked in place as illustrated below (***Figure 19a***).
2. Insert the TV Tuner module 1 as indicated in ***Figure 19b***.
3. Tighten screw 2 & connect cable 3 (***Figure 19c***).

Figure 19
TV Tuner Installation

a. Make sure that the cable is locked in place.
b. Insert the TV Tuner module.
c. Tighten the screw & connect the cable.

a.

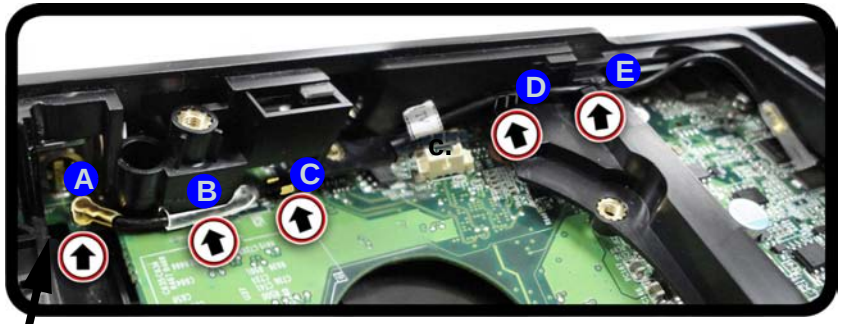

b.

c.

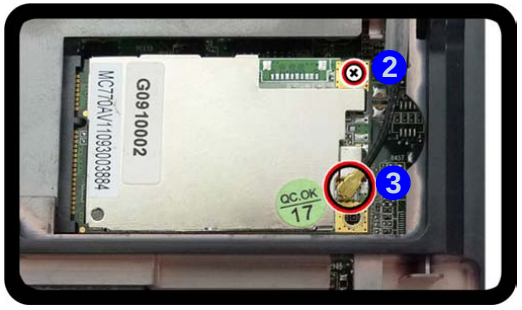

Note:

Before installation, make sure that the TV Tuner cable is placed in the following position:

1. Connect one end of the cable at point A.
2. Lock the cable with the plastic cover under point B.
3. Lock the cable in place with the hook provided at point C.
4. Run the remaining part of the cable through points D & E.

1. TV Tuner Module

- 1 Screw

Figure 20
Microphone Removal

a. Remove the screws.
b. Lift the top case up, keeping it level (do not tilt it).
c. Disconnect the microphone cable.
d. Remove the microphone.

Removing the Microphone

1. Turn **off** the computer, and remove the battery (***page 2 - 5***), component bay cover (***page 2 - 10***), processor (***page 2 - 17***), hard disk (***page 2 - 6***) (***page 2 - 10***), optical device (***page 2 - 9***), video card (***page 2 - 20***), and tv tuner (***page 2 - 22***).
2. Remove screws 1 - 19 and carefully push the bottom of the top case at point 20 (***Figure 20a***)
3. Lift the top case 21 up, keeping it level (do not tilt it) ***Figure 20b***.
4. Disconnect the microphone cable 22 (***Figure 20c***).
5. Remove the microphone 23 (***Figure 20d***).

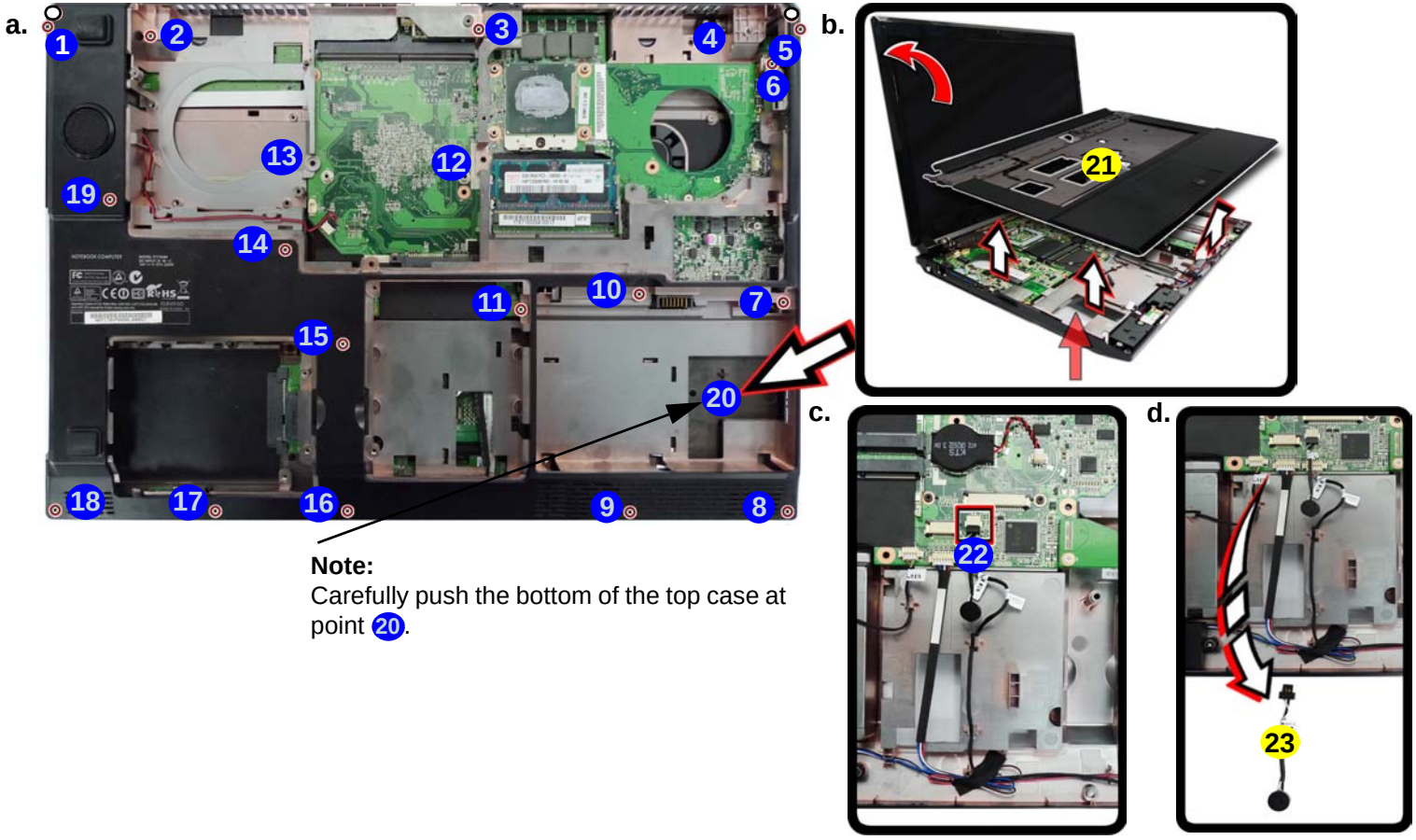

Note:
Carefully push the bottom of the top case at point 20.

21. Top Case
23. Microphone

- 19 Screws

Appendix A: Part Lists

This appendix breaks down the ***P170HM*** series notebook's construction into a series of illustrations. The component part numbers are indicated in the tables opposite the drawings.

Note: This section indicates the *manufacturer's* part numbers. Your organization may use a different system, so be sure to cross-check any relevant documentation.

Note: Some assemblies may have parts in common (especially screws). However, the part lists DO NOT indicate the total number of duplicated parts used.

Note: Be sure to check any update notices. The parts shown in these illustrations are appropriate for the system at the time of publication. Over the product life, some parts may be improved or re-configured, resulting in *new* part numbers.

Part List Illustration Location

The following table indicates where to find the appropriate part list illustration.

Table A- 1
Part List Illustration Location

Parts	W870CU
Top with Fingerprint	*page A - 3*
Top without Fingerprint	*page A - 4*
Bottom	*page A - 5*
LCD	*page A - 6*
HDD	*page A - 7*
COMBO	*page A - 8*
DVD-Dual Drive	*page A - 9*

Top with Fingerprint

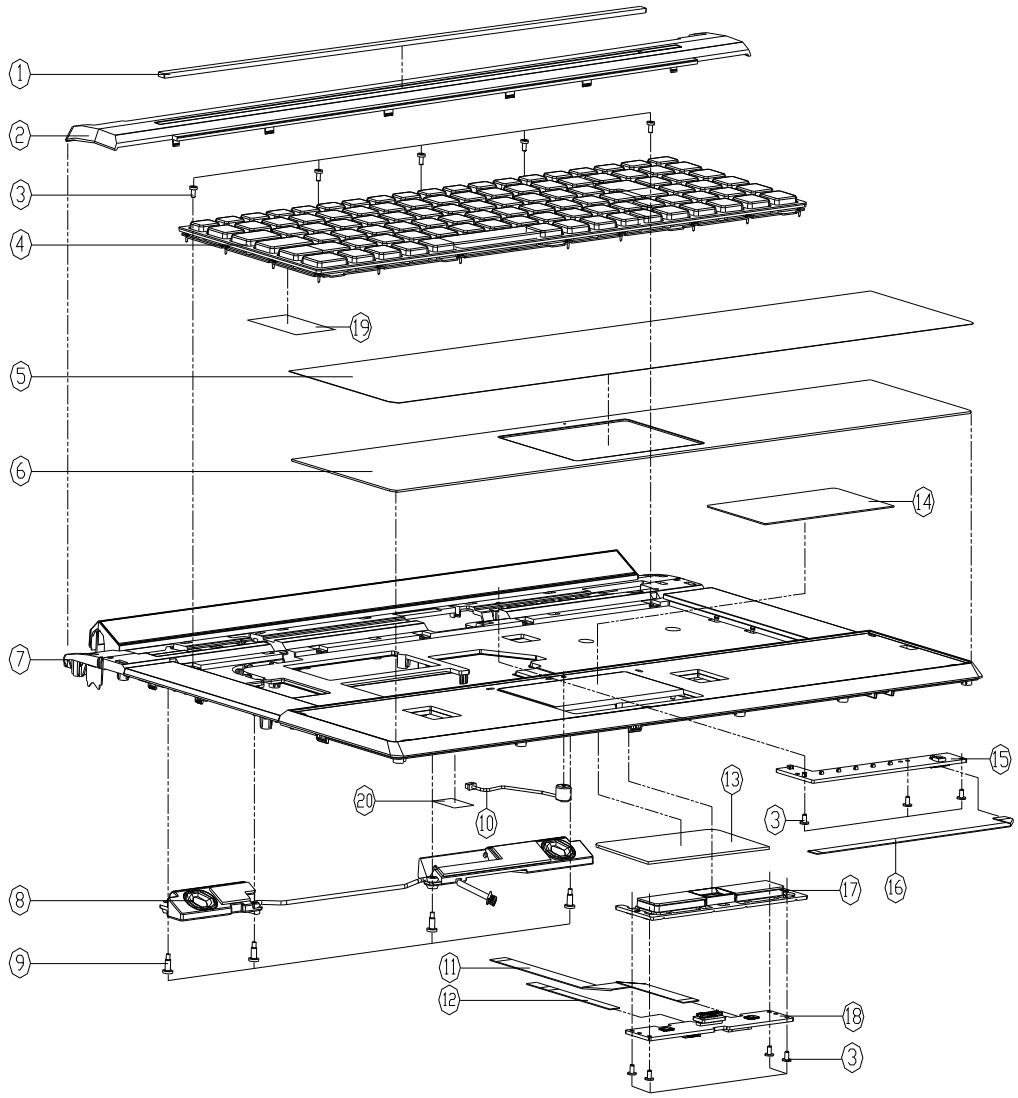

ITEM	PART NAME	PART NO	REMARK
1	TOP COSMETIC PLATE PMMA P170HM	6-42-P1702-022	
2	CENTER COVER MODULE P170HM	6-42-P1702-202	
3	SCREW M2*3L KI NI ICT NY (DD=ø4.5,DT=0.4)	6-35-B1120-3RE	
4	K/B USA (BLACK& FRAME (US) MODULE P170HM	6-79-P170HM0K-010	
5	TOP CASE PROTECT MYLAR(PET+3M8915) P170HM	6-40-P1702-020	
6	AL PLATE FOR PALM REST(PVT2) P170HM	6-33-P1702-021	
7	TOP CASE MODULE(W/O SPK MESH) P170HM3	6-39-P1702-010-D	
8	SPK+CABLE(TOP L/R) 20ø14 20W 4Ω 130MM P2014VMG04-3 P170HM	6-23-5P170-031	
9	SCREW M2*6.2L NI ICT NY FOR SPEAKER	6-35-Z1120-6R2	
10	MIC 6MM*3.5OMGCS-FOL-10 2V~10V 2.2K W/CABLE(C7) L=45MM RCDT	6-23-ER130-010	
11	FFC CABLE FOR CLICK BD TO M/B 10PIN PITCH=1.0 L=152MM (HB) P170HM	6-43-P1700-022	
12	FFC CABLE FOR TOUCH PAD 6PIN C4500	6-43-C4502-010	
13	TOUCH PAD SYNAPTICS TM-01146-003 MULTI-GES	6-49-C4802-010	
14	TP MYLAR P170HM	6-40-P1702-030	
15	LED BOARD V2.0 P170HM	6-77-X7104-D02	
16	FFC CABLE FOR POWER BD TO M/B 15PIN PITCH=0.5 L=147MM (HB) P170HM	6-43-P1700-012	
17	CLICK BUTTON W-FP MODULE P170HM	6-42-P1702-012	
18	CLICK BOARD V3.0+FINGERPRINT BOARD V2.0 ASS'Y P170HM	6-77-X710A-N03	
19	MYLAR(50*40*0.15T) FOR WIRELESS(PET) P170HM	6-40-P1702-050	
20	AL FOIL(40*15*0.25T) P170HM	6-47-P1702-010	

Figure A - 1
Top with Fingerprint

Top without Fingerprint

Figure A - 2
Top without Fingerprint

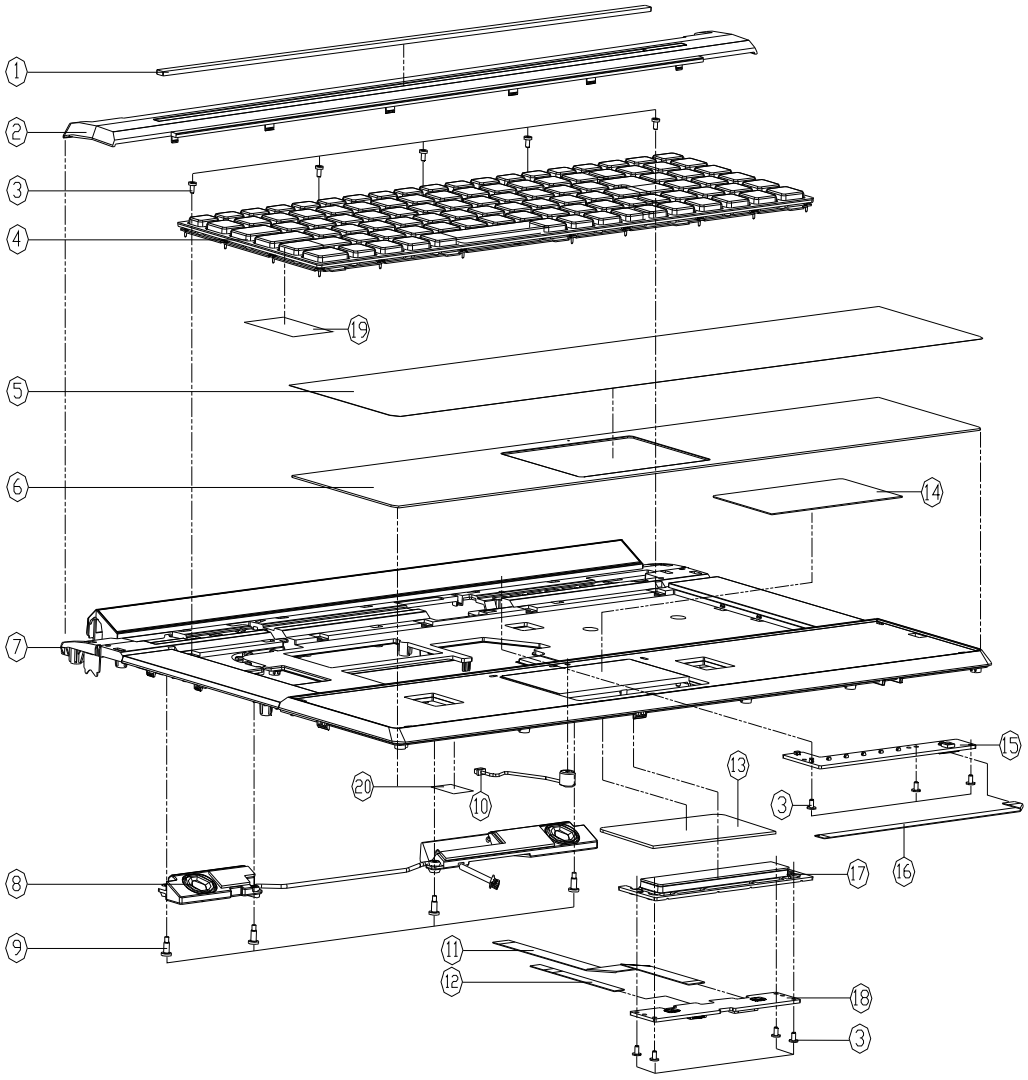

ITEM	PART NAME	PART NO	REMARK
1	TOP COSMETIC PLATE PMMA P170HM	6-42-P1702-022	
2	CENTER COVER MODULE P170HM	6-42-P1702-202	
3	SCREW M2×3L KI NI ICT NY (DD=ø4.5,DT=0.4)	6-35-B1120-3RE	
4	K/B USA (BLACK)& FRAME (US) MODULE P170HM	6-79-P170HM0K-010	
5	TOP CASE PROTECT MYLAR(PET+3M8915) P170HM	6-40-P1702-020	
6	AL PLATE FOR PALM REST(PVT2) P170HM	6-33-P1702-021	
7	TOP CASE MODULE(W/O SPK MESH) P170HM3	6-39-P1702-010-D	
8	SPK×CABLE(TOP L/R) 20ø14 20W 4Ω 130MM P2014YMGA4-3 P170HM	6-23-5P170-031	
9	SCREW M2×6.2L NI ICT NY FOR SPEAKER	6-35-Z1120-6R2	
10	MIC 6MM×3.5(H)6025-FOL-LO 2V~10V 2.2K W/CABLE(??) L=65MM R2301	6-23-ER130-010	
11	FFC CABLE FOR CLICK BD TO M/B 10PIN PITCH=1.0 L=152MM ø180 P170HM	6-43-P1700-022	
12	FFC CABLE FOR TOUCH PAD 6PIN C4500	6-43-C4502-010	
13	TOUCH PAD SYNAPTICS TM-01146-003 MULTI-GES	6-49-C4802-010	
14	TP MYLAR P170HM	6-40-P1702-030	
15	LED BOARD V2.0 P170HM	6-77-X7104-D02	
16	FFC CABLE FOR POWER BD TO M/B 15PIN PITCH=1.25 L=147MM ø180 P170HM	6-43-P1700-012	
17	CLICK BUTTON W/O-FP MODULE P170HM	6-42-P1702-102	
18	CLICK BOARD V3.0 (W/O FP) P170HM	6-77-X7102-D03-1	
19	MYLAR(50×40×0.15T) FOR WIRELESS(PET) P170HM	6-40-P1702-050	
20	AL FOIL(40×15×0.25T) P170HM	6-47-P1702-010	

Bottom

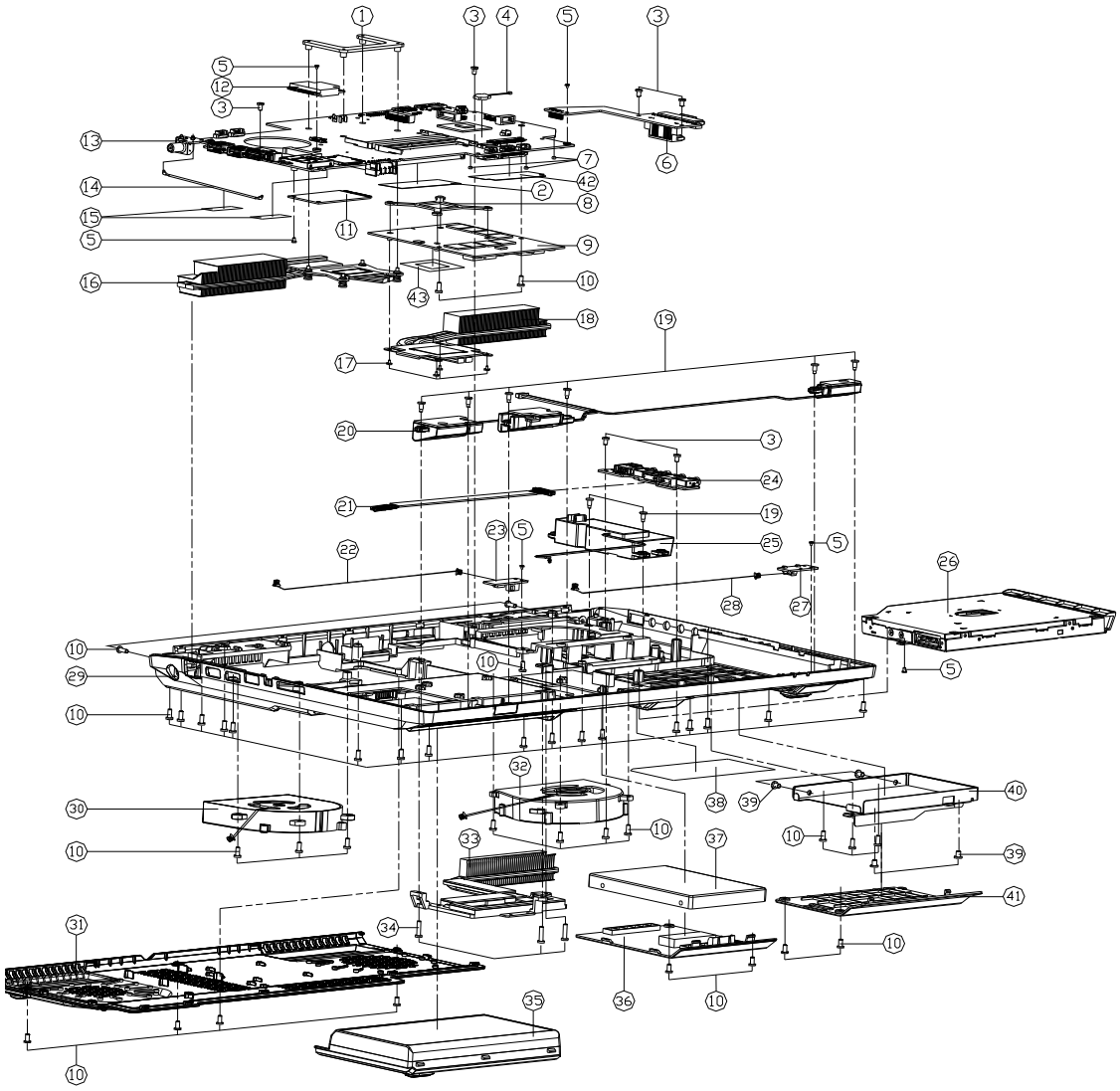

ITEM	PART NAME	PART NO	REMARK
1	CPU SUPPORT BRACKET SECC T=1.5 P150HM	6-33-X510S-011	
2	M520G MYLAR FOR DDR (更換印版)	6-40-M52GS-010-1	
3	SCREW M2.5*4L KI BK/Ø ICT NY	6-35-B4125-4RA	
4	BAT. 20MM 3V 220MAH W/CABLE 55MM BCR2032V5	6-23-22015-TC0	
5	SCREW M2*3L KI NI ICT NY (OD=Ø4.5,DT=0.4)	6-35-B1120-3RE	
6	HDD&ODD BOARD V2.0 P170HM	6-77-X710J-D02	
7	VGA SUPPORT RUBBER B SILICONE P150HM	6-47-X510S-010	
8	VGA SUPPORTER SUS430 X7200	6-33-X720S-040	
9	VGA BOARD V1.0 W/LCD NCC GT610M 1GB(DDR3)(2DW-2) 800MHz - 30W/TDP X7200	6-77-W860L-121-E	
9	VGA BOARD V1.0 W/LCD NCC GT 610M 1GB(DDR3)(2DW-2) 800MHz - 30W/TDP P7200 (NO PWR SEQUENCE)	6-77-W860L-121-G	
9	VGA BOARD W/LCD NCC GT610M 1GB(DDR3)(2DW-2) 800MHz - 30W/TDP P7200 (NO PWR SEQUENCE)	6-77-W860L-112-E	
10	SCREW M2.5*6L K BZ ICT NY	6-35-82125-6RA	
11	HYBRID TV TUNER W/AV S/W MC7700 NCC MINI-CARD DVB(T/CV)-D	6-88-D90F7-6501	
12	無線網路&藍芽模組 PCIE PCIE 無線網路 MINI CARD PCI-E WLAN/BT 電源管理 KB BLUE	6-88-M77C2-4220	(OPTION)
12	無線網路 MINI CARD 無線網路 PCIE PCIE 無線網路 MINI CARD PCI-E WLAN/BT 電源管理 KB BLUE	6-88-W76C2-8702	(OPTION)
12	無線網路 MINI CARD 無線網路 PCIE PCIE 無線網路 MINI CARD PCI-E WLAN/BT 電源管理 KB BLUE	6-88-C555F-8701	(OPTION)
12	無線網路&藍芽模組 (NO BT) 無線網路 MINI CARD PCI-E WLAN/BT 電源管理 KB BLUE	6-88-W76C2-7001	(OPTION)
12	WLAN+BT COMBO CASTLENET RTL8188CE(BT-G)95J	6-88-C555F-5300	(OPTION)
12	WLAN+BT COMBO AZUREWAVE AW-NB057H 802.11BG	6-88-C555F-7001	(OPTION)
12	無線網路&藍芽模組 無線網路 PCIE PCIE 無線網路 MINI CARD PCI-E WLAN/BT	6-88-P170Z-4200	(OPTION)
12	無線網路 MINI CARD 無線網路 PCIE PCIE 無線網路 3G MINI CARD PCI-E WLAN/BT	6-88-P170F-4200	(OPTION)
12	無線網路 MINI CARD 無線網路 PCIE PCIE 無線網路 3G MINI CARD PCI-E WLAN/BT	6-88-P170F-4210	(OPTION)
13	MAIN BOARD V3.0 (W/O SIM CARD) P170HM	6-77-X7100-D03	
13	MAIN BOARD V3.0 (W/SIM (,P TV INTERFACE)) P170HM	6-77-X7100-D03-1	
14	TV TUNER CABLE 137 L=125MM P170HM	6-43-P170T-020	
15	TAPE MYLAR (C),MYLAR M550J	6-40-M55J2-030	
16	CPU HEATSINK MODULE P150HM	6-31-P170N-101	
17	SCREW M1.6*3.5L KT=1.2 D=4.5) BZ ICT NY	6-35-82116-3R5	
18	GPU(GTX) HEATSINK MODULE P150HM	6-31-X510N-302	FOR (N12E-GTX)
18	GPU(GS) HEATSINK MODULE P150HM	6-31-X510N-202	FOR (N11E-GS(B)
19	SCREW M2*6.2L NI ICT NY FOR SPEAKER	6-35-Z1120-6R2	
20	SPK(CABLE(BOT RIGHT/CENTER/LEFT) 25W11/25W15MM	6-23-5P170-021	
21	WIRE CABLE FOR AUDIO BOARD TO MB 20P P170H	6-43-P1700-032	
22	WIRE CABLE FOR IR BOARD TO MB 4P P170HM	6-43-P1700-051	
23	CIR BOARD V3.0 P170HM	6-77-X510H-D03-A	
24	AUDIO BOARD V3.0 P150HM	6-77-X5108-D03	
25	SPK(CABLE(WOOFER) 120 MM 2W 4Ω L&SMM P280CC04-7 P170HM	6-23-5P170-011	
26	W/O ODD ASS'Y P150HM	6-79-P150HM0Z-000	
26	SATA DVD SUPER MULTI ASS'Y (OPTION)	6-79-P170HM0Q-010	
26	SATA BLU-RAY WRITER ASS'Y (OPTION)	6-79-P170HM0W-010	
27	LED BOARD V1.0A P150HM	6-77-X5104-D01A	
28	WIRE CABLE FOR LED BOARD TO MB 5P P170HM	6-43-P1700-041	
29	BOTTOM CASE MODULE P170HM	6-39-P1703-013	
30	FAN(COIL 7X7X15MM 5V 0.5A DS6005M-U00 2000RPM AVPOWER P150HM	6-23-AX510-012	
31	CPU COVER MODULE P170HM	6-42-P1708-103	
32	FAN MODULE 85X85MM 5V 0.5A 2000RPM KSB0505-09M A-POWER X720N	6-31-X720S-101	
33	VRAM(GTX) HEATSINK MODULE P150HM	6-31-X510N-502	FOR (N12E-GTX)
33	VRAM(GS) HEATSINK MODULE P150HM	6-31-X510N-402	FOR (N11E-GS(B)
34	SCREW M2.5*8L KI BK/Z NY ICT	6-35-B6125-8R0	
35	BAT.P S LI 14.8V/52WH/6.6AH 4S2P CELXPERT/SDI PSE 9983WWW X7200	6-87-X710S-4J72	(OPTION)
35	BAT.P S LI 14.8V/52WH/6.6AH 4S2P SMP/SDI PSE 9981ZBEF X7200	6-87-X710S-4272	(OPTION)
36	MAIN HDD COVER SABIC C7230P-701DE (MP) P170HM	6-42-P170J-012	
37	W/ HDD ASS'Y P170HM	6-79-P170HM0J-020	
37	W/O HDD ASS'Y P170HM	6-79-P170HM0J-010	
37	W/O 2ND HDD ASS'Y P170HM	6-79-P170HM0J-030	
37	W/ 2ND HDD ASS'Y P170HM	6-79-P170HM0J-040	
38	PRODUCT LABEL P170HM	6-45-P170HM03-010	
39	(非解器)SCREW M3*4L KI NI ICT	6-35-B1130-4RB	
40	SECOND HDD BRACKET(SECC 0.8T)+ SPTE 0.3T)MYLAR 0.3T) P170HM	6-33-P170J-012	
41	SECOND HDD COVER SABIC C7230P-701DE P170HM	6-42-P170J-021	
42	MYLAR (76.5*28.5*4.2T) FOR NB SATA HDD CONNECTOR P150HM	6-40-X510S-010	
43	VGA CHIP MYLAR FOR N11E-GS W860CU	6-40-W860S-060	FOR N11E-GS(B)MP ONLY

Figure A - 3
Bottom

LCD

Figure A - 4
LCD

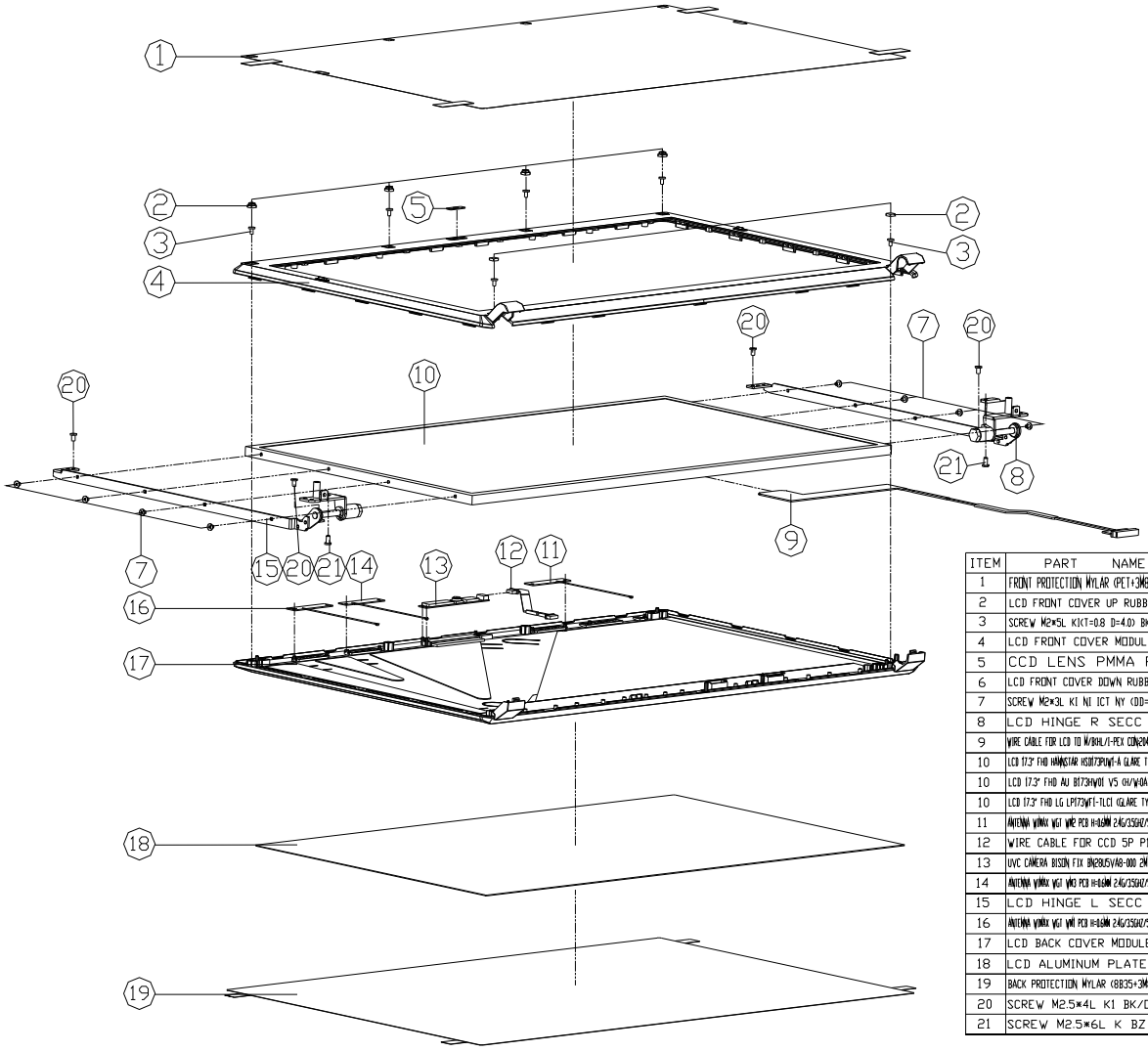

ITEM	PART NAME	PART NO	REMARK
1	FRONT PROTECTION MYLAR (PET+3M8915) P170HM	6-40-P1701-010	
2	LCD FRONT COVER UP RUBBER P170HM	6-47-P1701-041	
3	SCREW M2*5L K(CT=0.8 D=4.0) BK/Z ICT NY	6-35-B6120-5R0	
4	LCD FRONT COVER MODULE P170HM	6-39-P1701-012	
5	CCD LENS PMMA P170HM	6-42-P1701-010	
6	LCD FRONT COVER DOWN RUBBER P170HM	6-47-P1701-021	
7	SCREW M2*3L K1 N1 ICT NY (DD=Ø4.5,DT=0.4)	6-35-B1120-3RE	
8	LCD HINGE R SECC P170HM	6-33-P1701-022	
9	WIRE CABLE FOR LCD TO M/BOAL/1-PEX CON(2M54-040T) P170HM	6-43-P1701-011	
10	LCD 17.3" FHD HANNSTAR HSD173PUW1-A GLARE TYPE (LED) 5.8 MM	6-50-NB258-N00	
10	LCD 17.3" FHD AU B173HVD1 V5 (H/W:0A) (LED) 6.0 MM	6-50-NB260-G02	
10	LCD 17.3" FHD LG LP173WF1-TLC1 (GLARE TYPE) (LED) 6.0MM	6-50-NB260-L00	
11	ANTENNA WIMAX WGI WIR PCB H=8.6MM 2.4G/3.5GHZ/5G L=68MM P170HM	6-23-7P170-021	
12	WIRE CABLE FOR CCD 5P P170HM (HL)	6-43-P170T-010	
13	UVC CAMERA BISON FIX BN28U5VA8-000 2M DV2655 W760S	6-88-W76SC-4900	
14	ANTENNA WIMAX WGI WIR PCB H=8.6MM 2.4G/3.5GHZ/5G L=51MM P170HM	6-23-7P170-031	
15	LCD HINGE L SECC P170HM	6-33-P1701-012	
16	ANTENNA WIMAX WGI WIR PCB H=8.6MM 2.4G/3.5GHZ/5G L=30MM P170HM	6-23-7P170-011	
17	LCD BACK COVER MODULE P170HM	6-39-P1701-022	
18	LCD ALUMINUM PLATE P170HM	6-33-P1701-031	
19	BACK PROTECTION MYLAR (8B35+3M8915) P170HM	6-40-P1701-020	
20	SCREW M2.5*4L K1 BK/□ ICT NY	6-35-B4125-4RA	
21	SCREW M2.5*6L K BZ ICT NY	6-35-B2125-6RA	

HDD

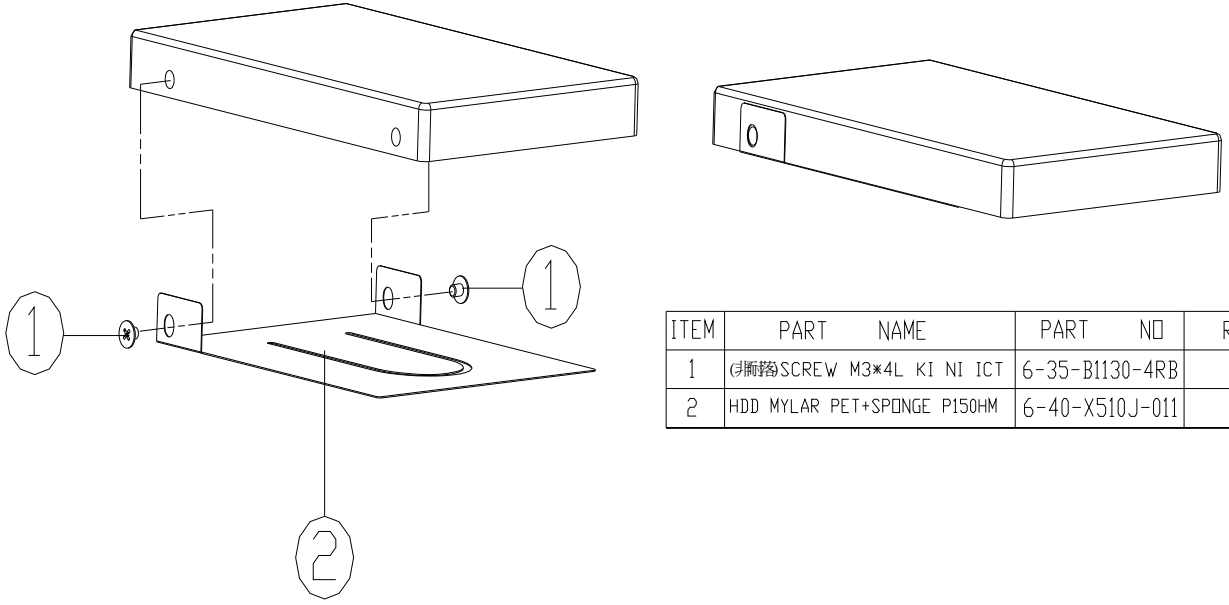

ITEM	PART NAME	PART NO	REMARK
1	(J)斷路SCREW M3*4L KI NI ICT	6-35-B1130-4RB	
2	HDD MYLAR PET+SPONGE P150HM	6-40-X510J-011	

Figure A - 5
HDD

COMBO

Figure A - 6
COMBO

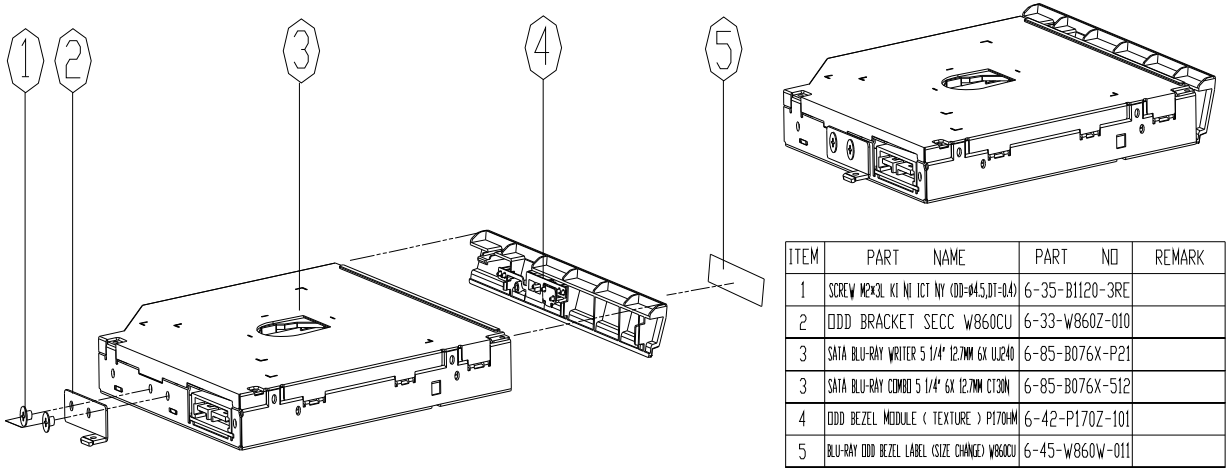

ITEM	PART NAME	PART NO	REMARK
1	SCREW M2*3L K1 NI ICT NY (OD=Ø4.5,DT=0.4)	6-35-B1120-3RE	
2	ODD BRACKET SECC W860CU	6-33-W860Z-010	
3	SATA BLU-RAY WRITER 5 1/4" 12.7MM 6X UJ240	6-85-B076X-P21	
3	SATA BLU-RAY COMBO 5 1/4" 6X 12.7MM CT30N	6-85-B076X-512	
4	ODD BEZEL MODULE (TEXTURE) P170HM	6-42-P170Z-101	
5	BLU-RAY ODD BEZEL LABEL (SIZE CHANGE) W860CU	6-45-W860W-011	

DVD-Dual Drive

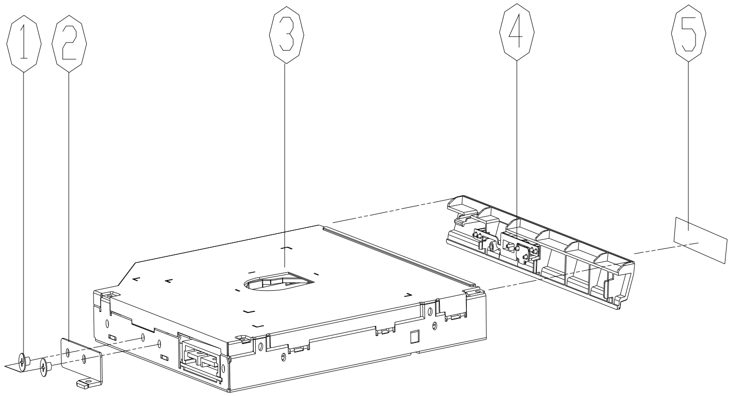

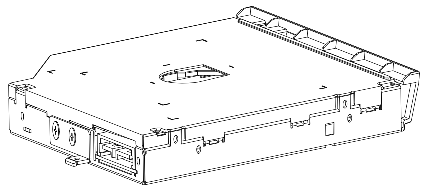

ITEM	PART NAME	PART NO	REMARK
1	SCREW M2*3L K1 NI ICT NY (DD=ø4.5,DT=0.4)	6-35-B1120-3RE	
2	ODD BRACKET SECC W860CU	6-33-W860Z-010	
3	SATA DVD SUPER MULTI 5 1/4" 8X 12.7MM TS-L633C/IMCF F/W TM01 H/W:A VER.C (WINDOWS 7 SUPPORT) TSST	6-85-A078X-T09	FOR TSST
4	ODD BEZEL MODULE (TEXTURE) P170HM	6-42-P170Z-101	
5	SUPER MULTI ODD BEZEL LABEL (SIZE CHANGE)	6-45-W860Q-011	

Figure A - 7
DVD-Dual Drive

A.Part Lists

Appendix B: Schematic Diagrams

This appendix has circuit diagrams of the ***P170HM*** notebook's PCB's. The following table indicates where to find the appropriate schematic diagram.

Table B - 1
Schematic Diagrams

Diagram - Page	Diagram - Page	Diagram - Page
System Block Diagram - Page B - 2	*CougarPoint - M 2/9 - Page B - 21*	*5V, 3.3V, 5VS, 3VS, 1.5VS, VIN1 - Page B - 40*
Clock Generator - Page B - 3	*CougarPoint - M 3/9 - Page B - 22*	*Power 1.05VS, 1.05VS_VTT - Page B - 41*
Processor 1/7 - Page B - 4	*CougarPoint - M 4/9 - Page B - 23*	*Power 1.5V/VTT_MEM - Page B - 42*
Processor 2/7 - Page B - 5	*CougarPoint - M 5/9 - Page B - 24*	*Power 1.8VS - Page B - 43*
Processor 3/7 - Page B - 6	*CougarPoint - M 6/9 - Page B - 25*	*Power V-Core 1 - Page B - 44*
Processor 4/7 - Page B - 7	*CougarPoint - M 7/9 - Page B - 26*	*Power V-Core 2 - Page B - 45*
Processor 5/7 - Page B - 8	*CougarPoint - M 8/9 - Page B - 27*	*AC_In, Charger - Page B - 46*
Processor 6/7 - Page B - 9	*CougarPoint - M 9/9 - Page B - 28*	*Power 0.85VS - Page B - 47*
Processor 7/7 - Page B - 10	*3G, CCD - Page B - 29*	*Audio Jack - Page B - 48*
DDRIII CHA SO-DIMM_0 - Page B - 11	*Mini PCIE, LID - Page B - 30*	*X5100 ODD Board - Page B - 49*
DDRIII CHA SO-DIMM_1 - Page B - 12	*LED, Hotkey, LID SW, Fan - Page B - 31*	*X5100 Click Board - Page B - 50*
DDRIII CHB SO-DIMM_0 - Page B - 13	*RJ45 - Page B - 32*	*X5100 LED 1 Board - Page B - 51*
DDRIII CHB SO-DIMM_1 - Page B - 14	*Codec Realtek ALC892 - Page B - 33*	*X5100 LED 2 Board - Page B - 52*
MXM PCI-E - Page B - 15	*APA2010D1-TPA2008D2 - Page B - 34*	*X5100 LED 3 Board - Page B - 53*
Panel, Inverter, CRT - Page B - 16	*KBC-ITE IT8519 - Page B - 35*	*X7100 HDD & ODD Board - Page B - 54*
1394_JMB380C - Page B - 17	*USB, TP, FP, MULTI-CONN - Page B - 36*	*X7100 CIR - Page B - 55*
DVI - Page B - 18	*Card Reader (JMC 251C) - Page B - 37*	*X7100 LED Board - Page B - 56*
HDMI - Page B - 19	*USB 3.0 - Page B - 38*	*X7100 Click Board - Page B - 57*
CougarPoint - M 1/9 - Page B - 20	*VDD3, VDD5 - Page B - 39*	*X7100 Fingerprint Board - Page B - 58*

Version Note

The schematic diagrams in this chapter are based upon version 6-7P-X510C-002. If your mainboard (or other boards) are a later version, please check with the Service Center for updated diagrams (if required).

System Block Diagram

Sheet 1 of 57
System Block Diagram

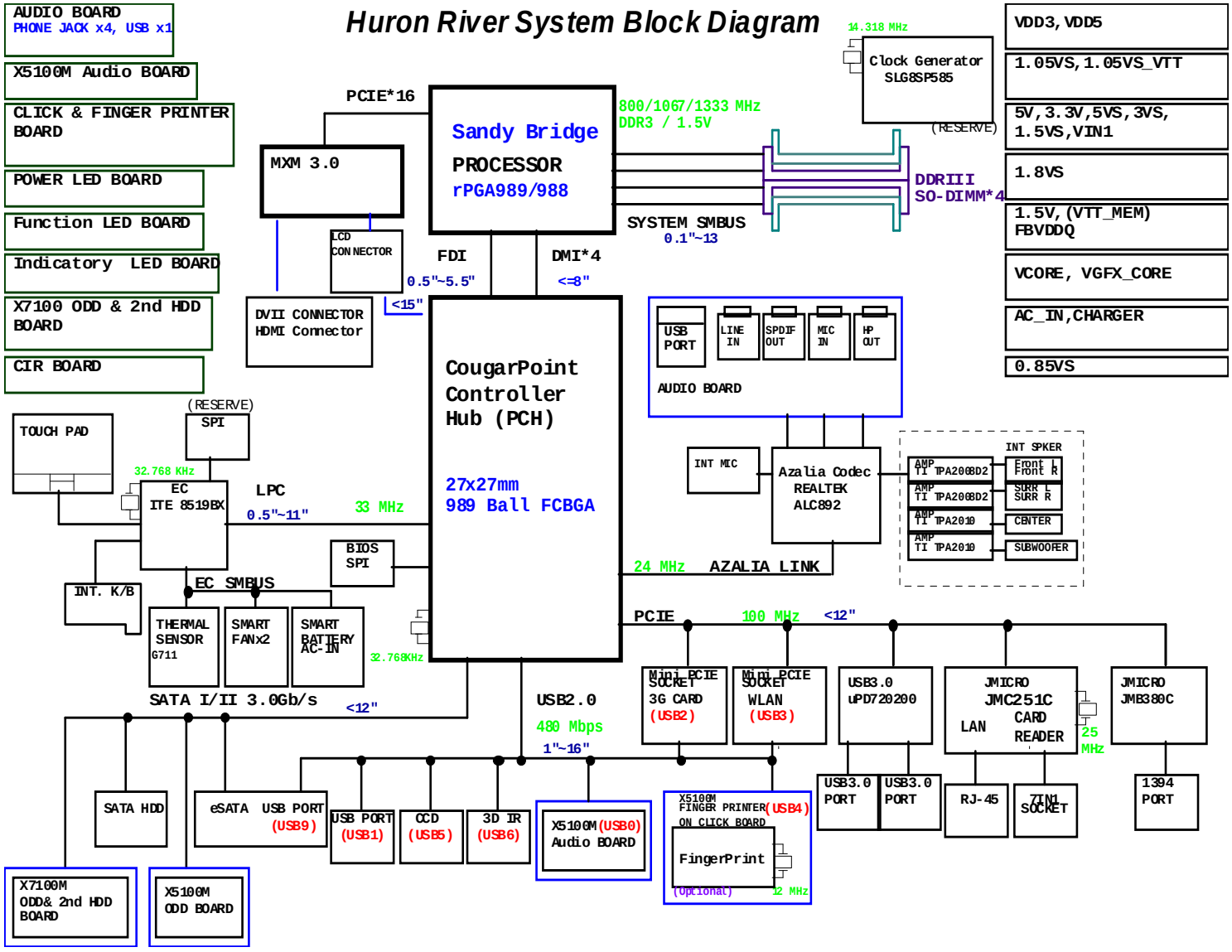

Clock Generator

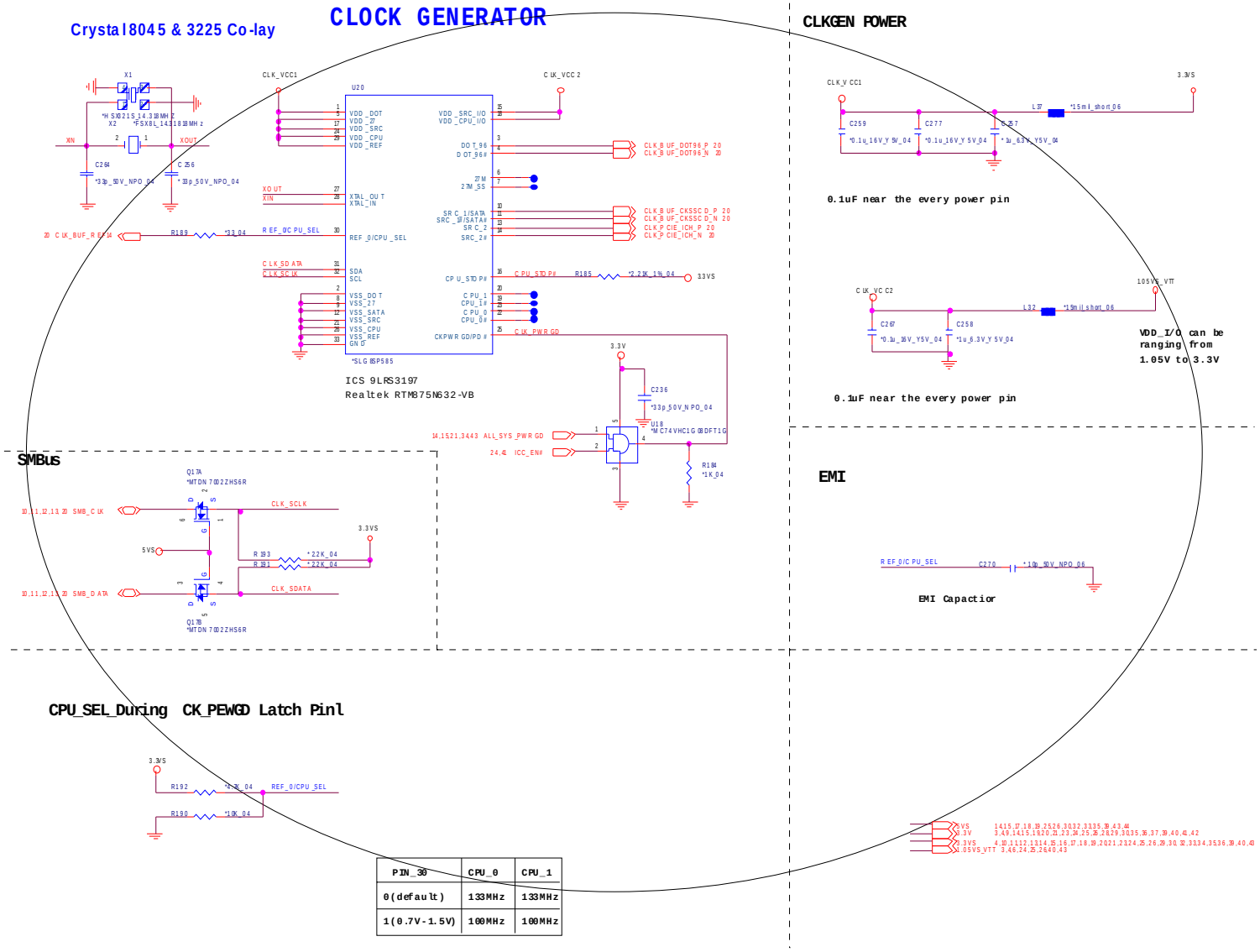

PIN_30	CPU_0	CPU_1
0(default)	133MHz	133MHz
1(0.7V-1.5V)	100MHz	100MHz

Sheet 2 of 57
Clock Generator

B.Schematic Diagrams

Processor 1/7

Sandy Bridge Processor 1/7 (DMI,PEG,FDI)

Sheet 3 of 57
Processor 1/7

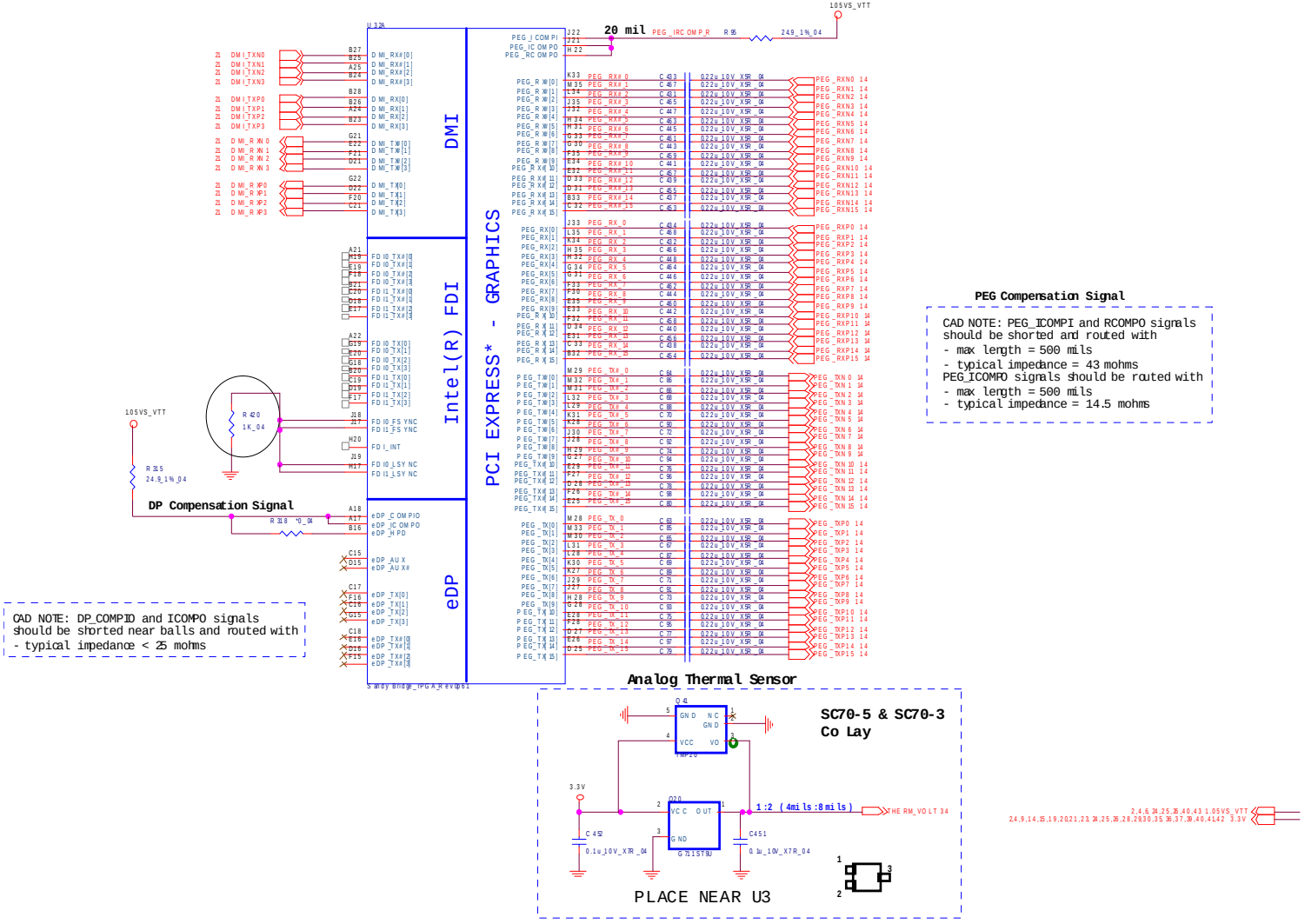

Processor 2/7

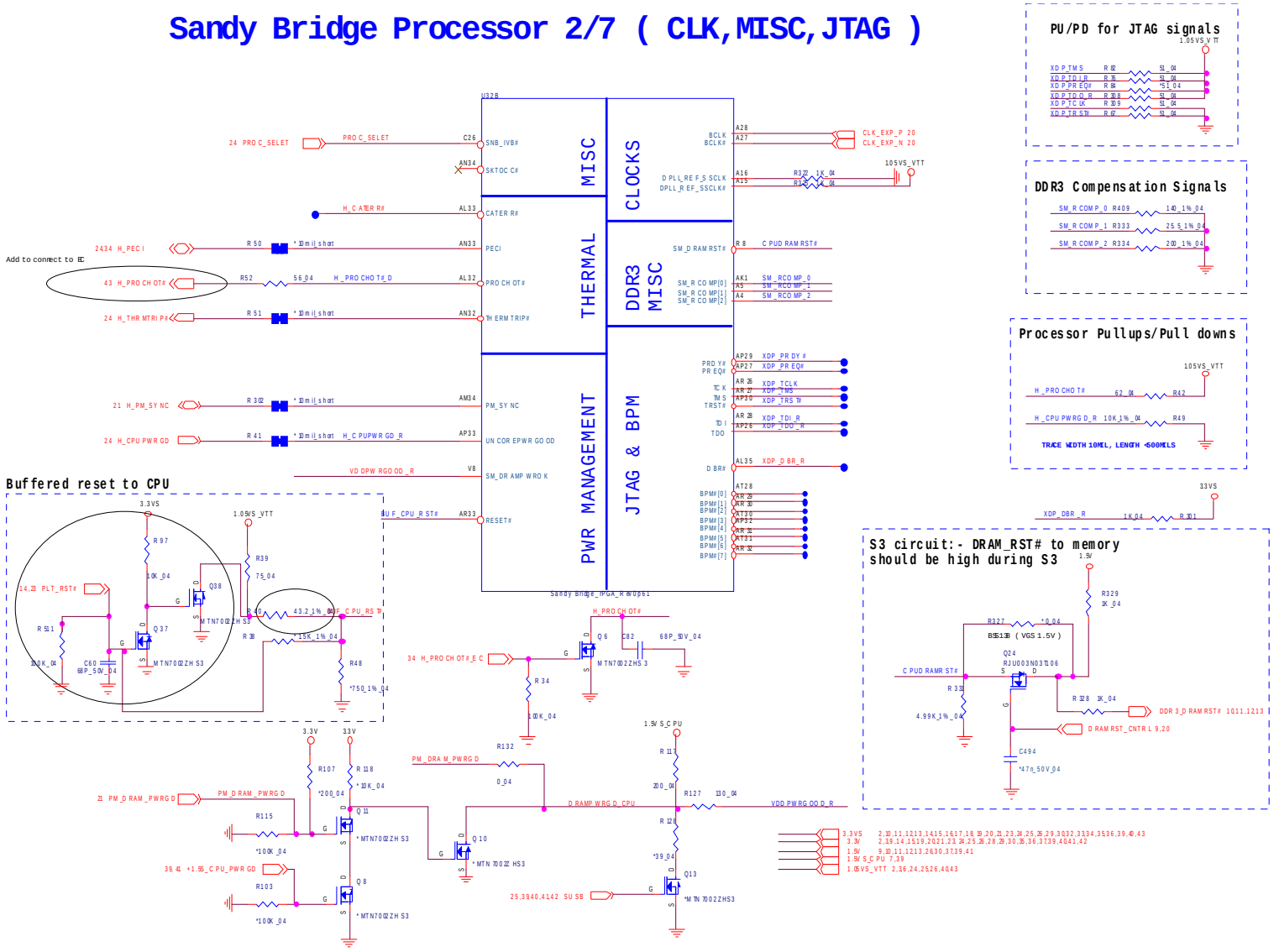

Sheet 4 of 57
Processor 2/7

Processor 3/7

Sandy Bridge Processor 3/7 (DDR3)

Sheet 5 of 57
Processor 3/7

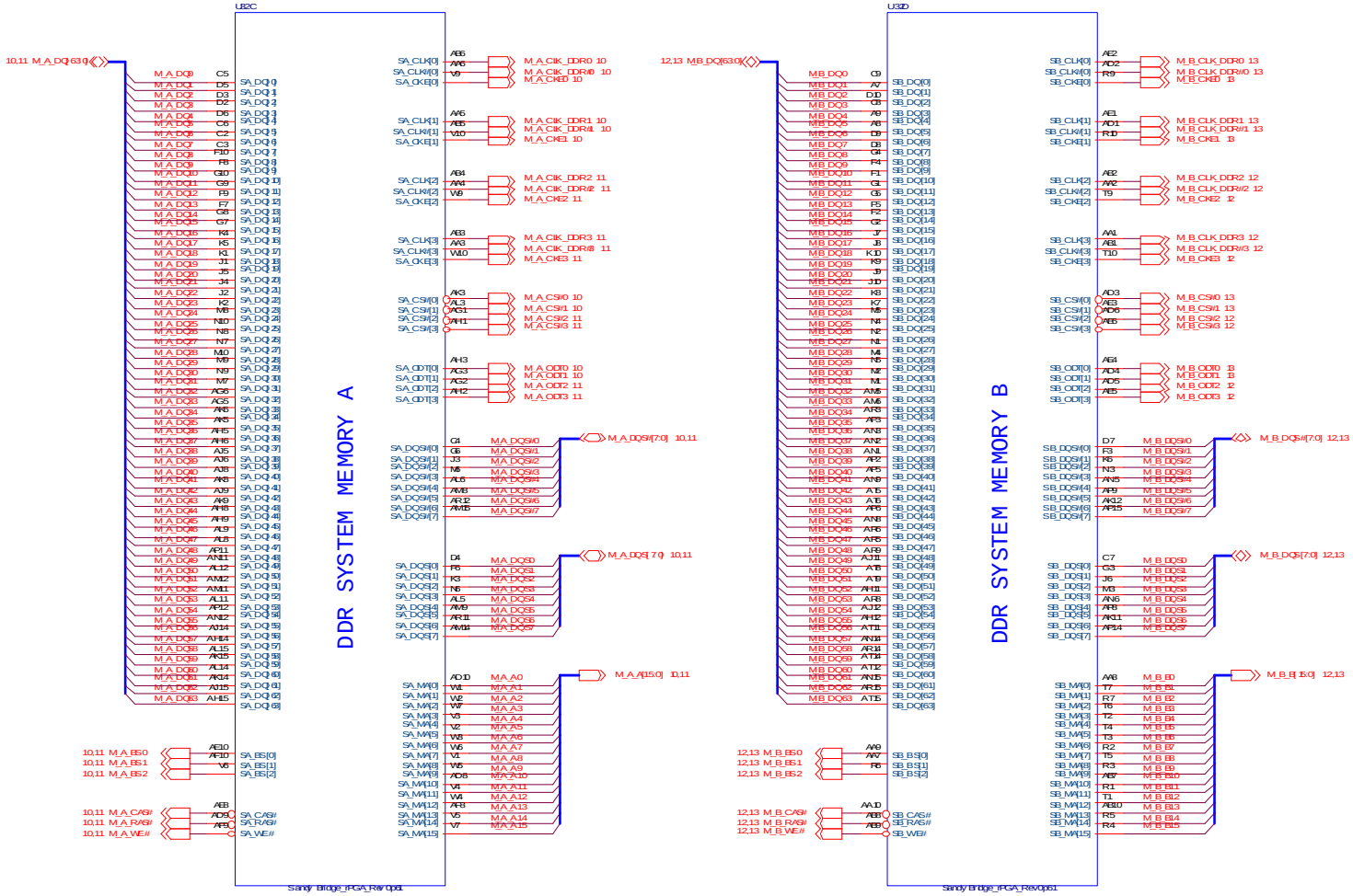

Processor 4/7

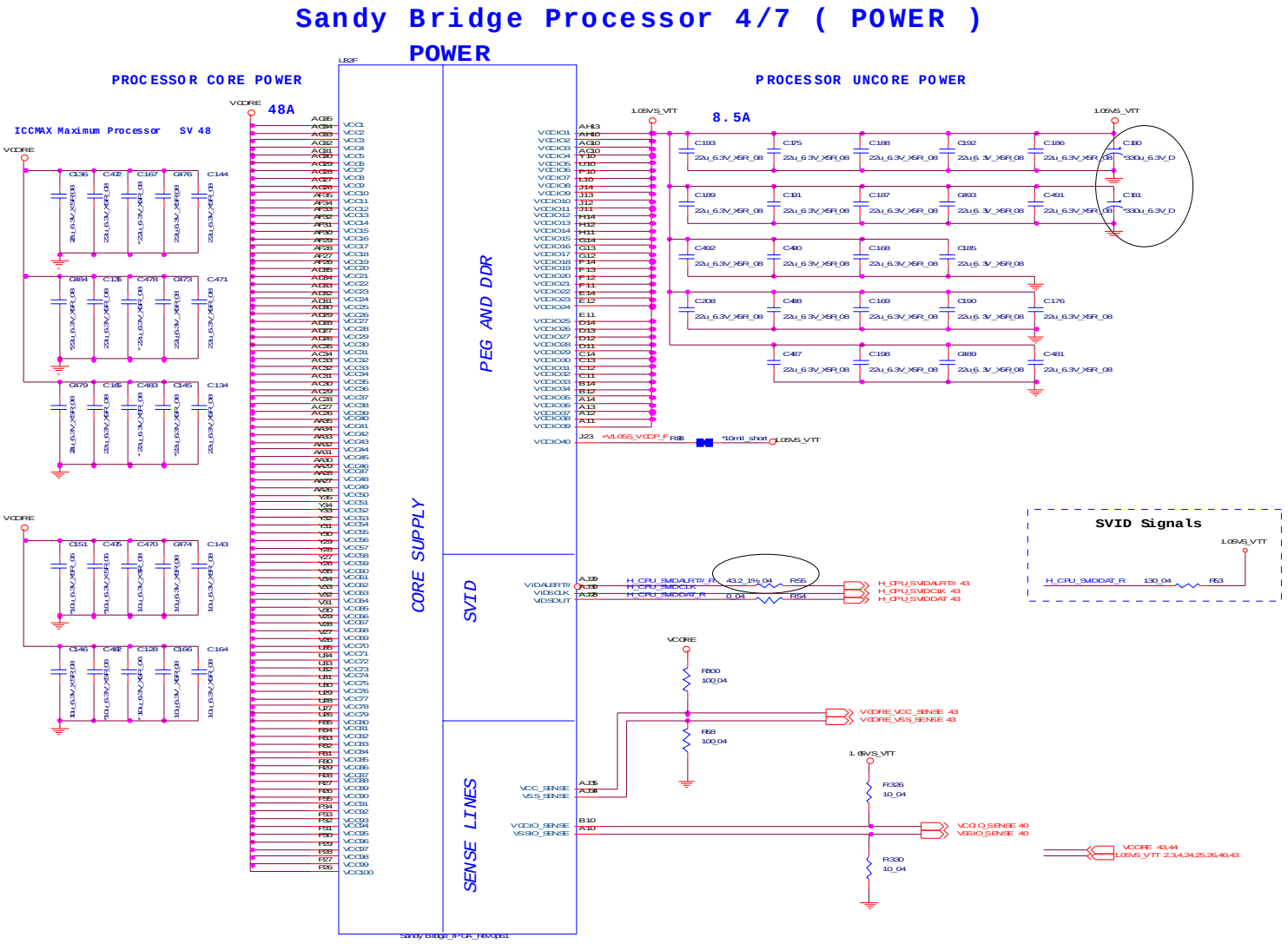

Sheet 6 of 57
Processor 4/7

Processor 5/7

Sandy Bridge Processor 5/7 (GRAPHICS POWER)

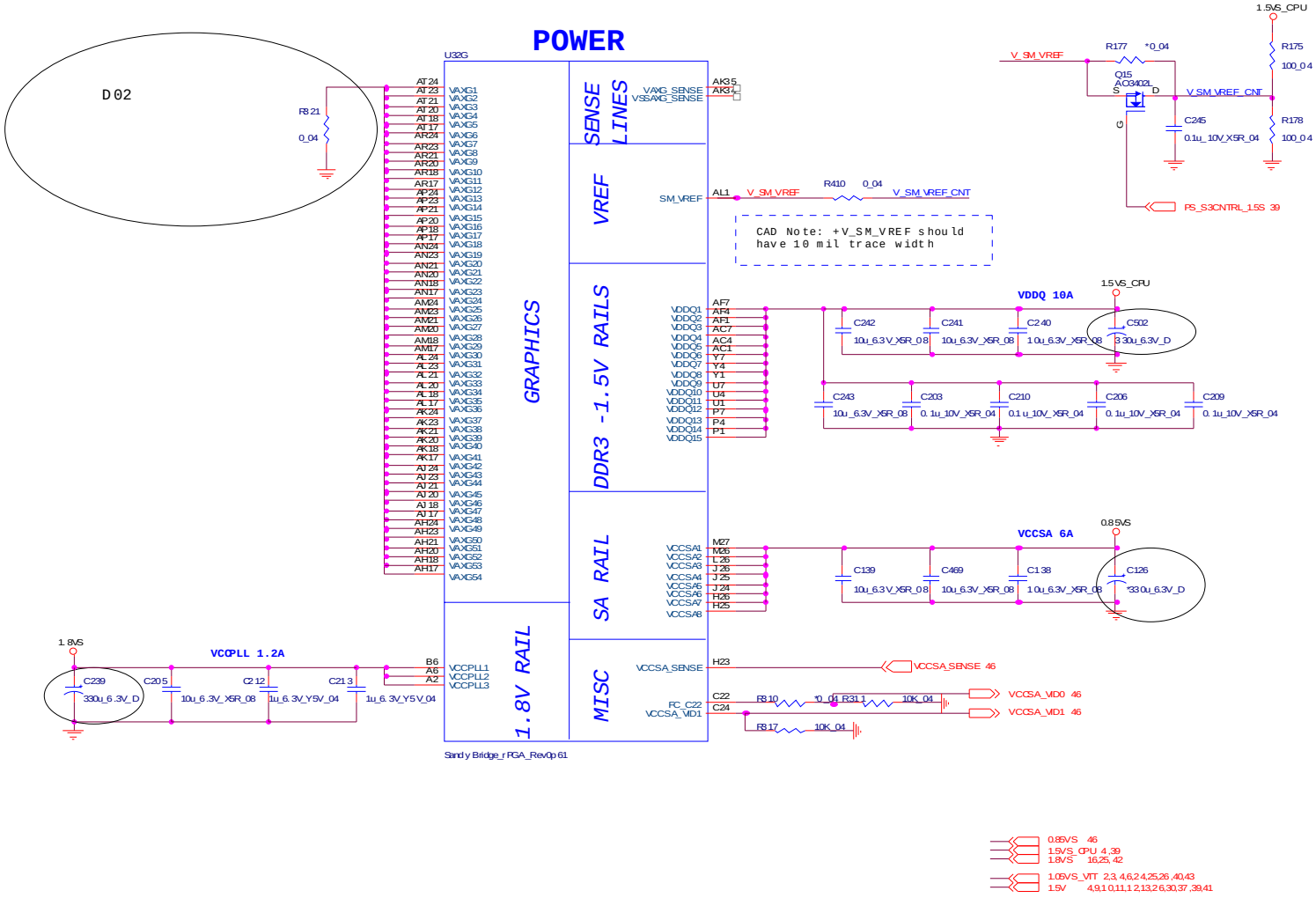

Sheet 7 of 57
Processor 5/7

Processor 6/7

Sandy Bridge Processor 6/7 (GND)

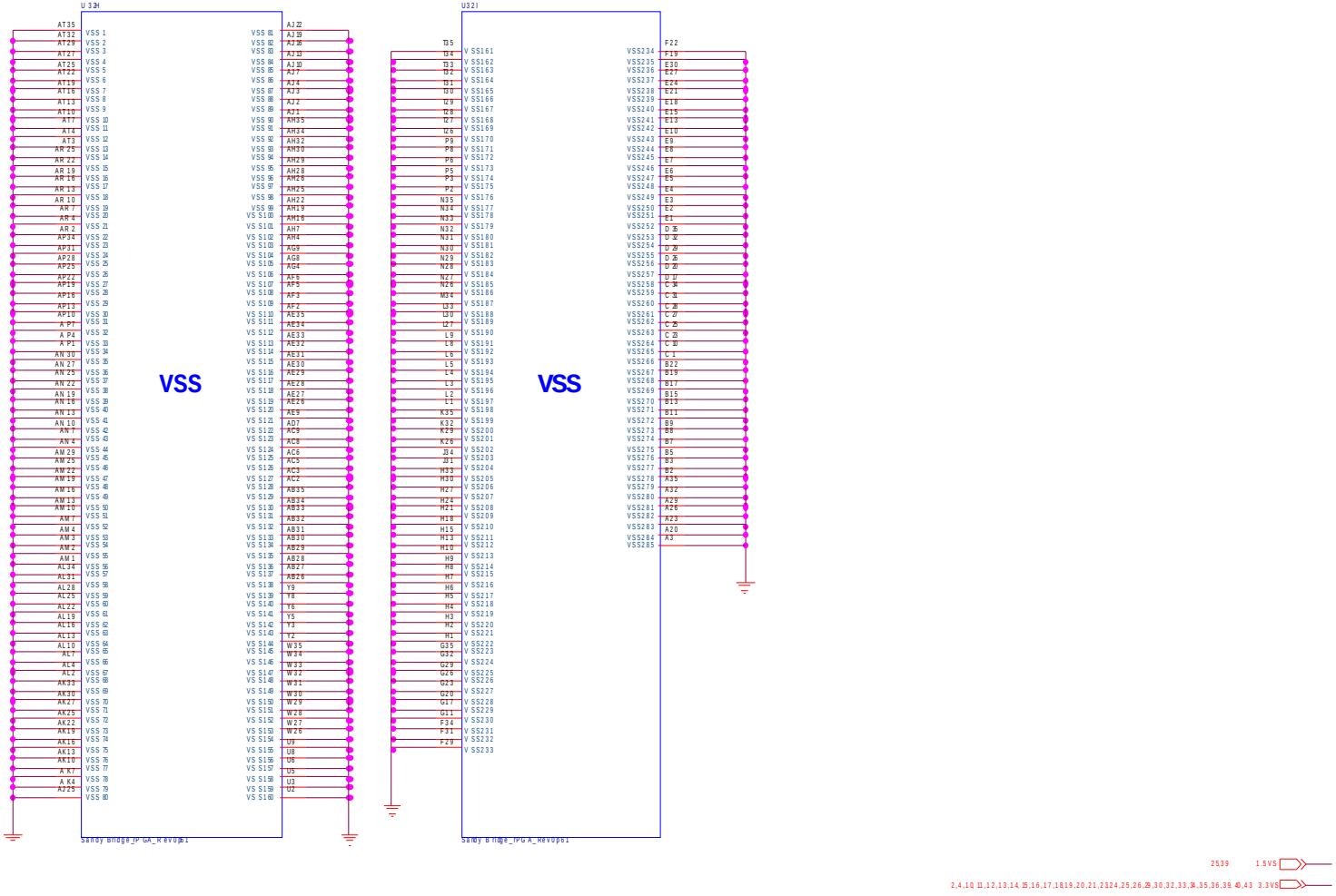

Sheet 8 of 57
Processor 6/7

Processor 7/7

Sheet 9 of 57
Processor 7/7

Sandy Bridge Processor 7/7 (RESERVED)

CFG Straps for Processor

PEG Static Lane Reversal - CFG2 is for the 16x	
CFG2	1:(Default) Normal Operation; Lane # definition matches socket pin map definition 0:Lane Reversed

Display Port Presence Strap	
CFG4	1:(Default) Disabled; No Physical Display Port attached to Embedded Display Port 0:Enabled; An external Display Port device is connected to the Embedded Display Port

PCIE Port Bifurcation Straps	
CFG[6:5]	11: (Default) x16 - Device 1 functions 1 and 2 disabled 10: x8, x8 - Device 1 function 1 enabled ; function 2 disabled 01: Reserved - (Device 1 function 1 disabled ; function 2 enabled) 00: x8,x4,x4 - Device 1 functions 1 and 2 enabled

PEG DEFER TRAINING	
CFG7	1: (Default) PEG Train immediately following xxRESETB de assertion 0: PEG Wait for BIOS for training

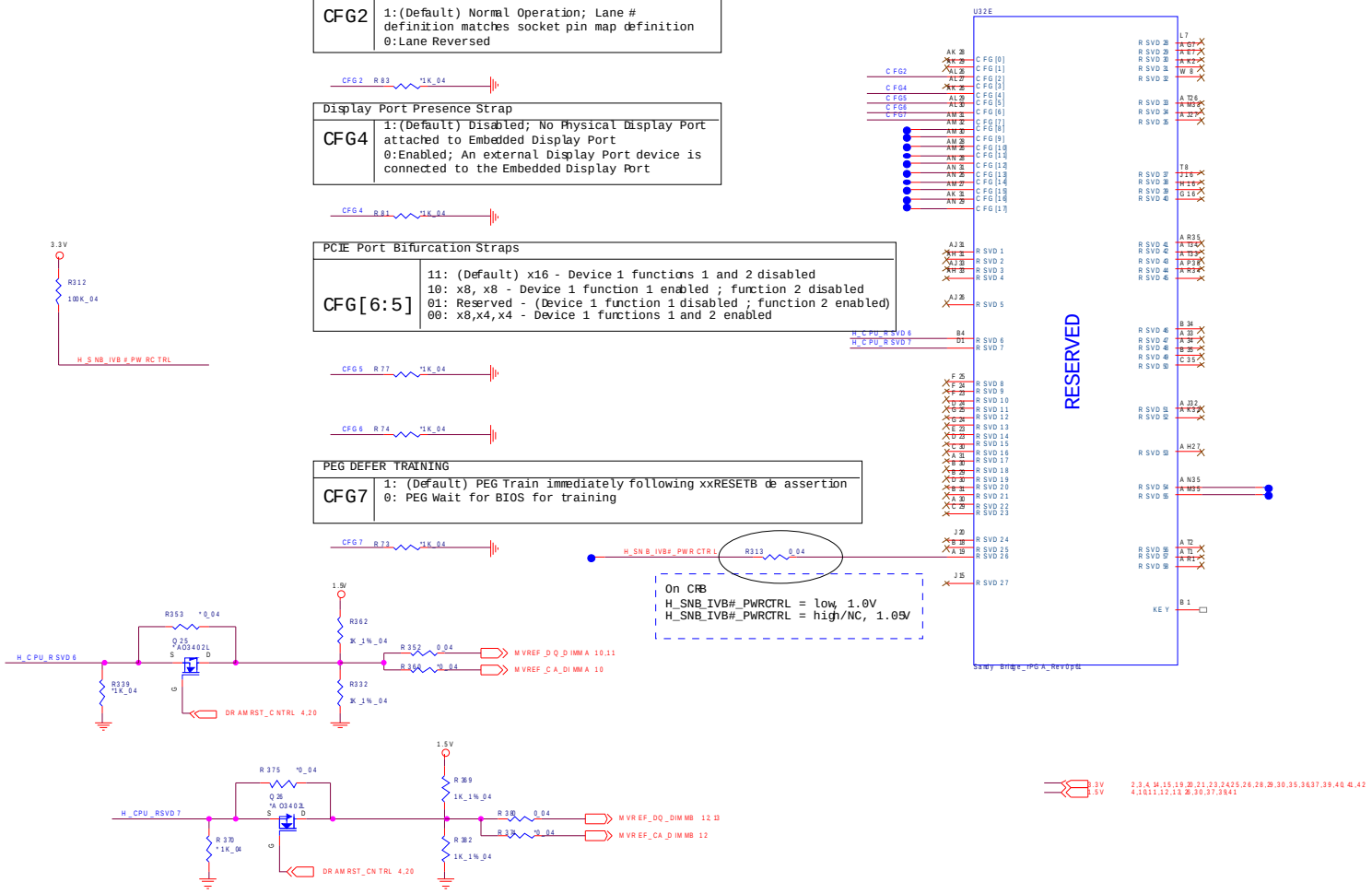

DDRIII CHA SO-DIMM_0

Channel A SO-DIMM 0

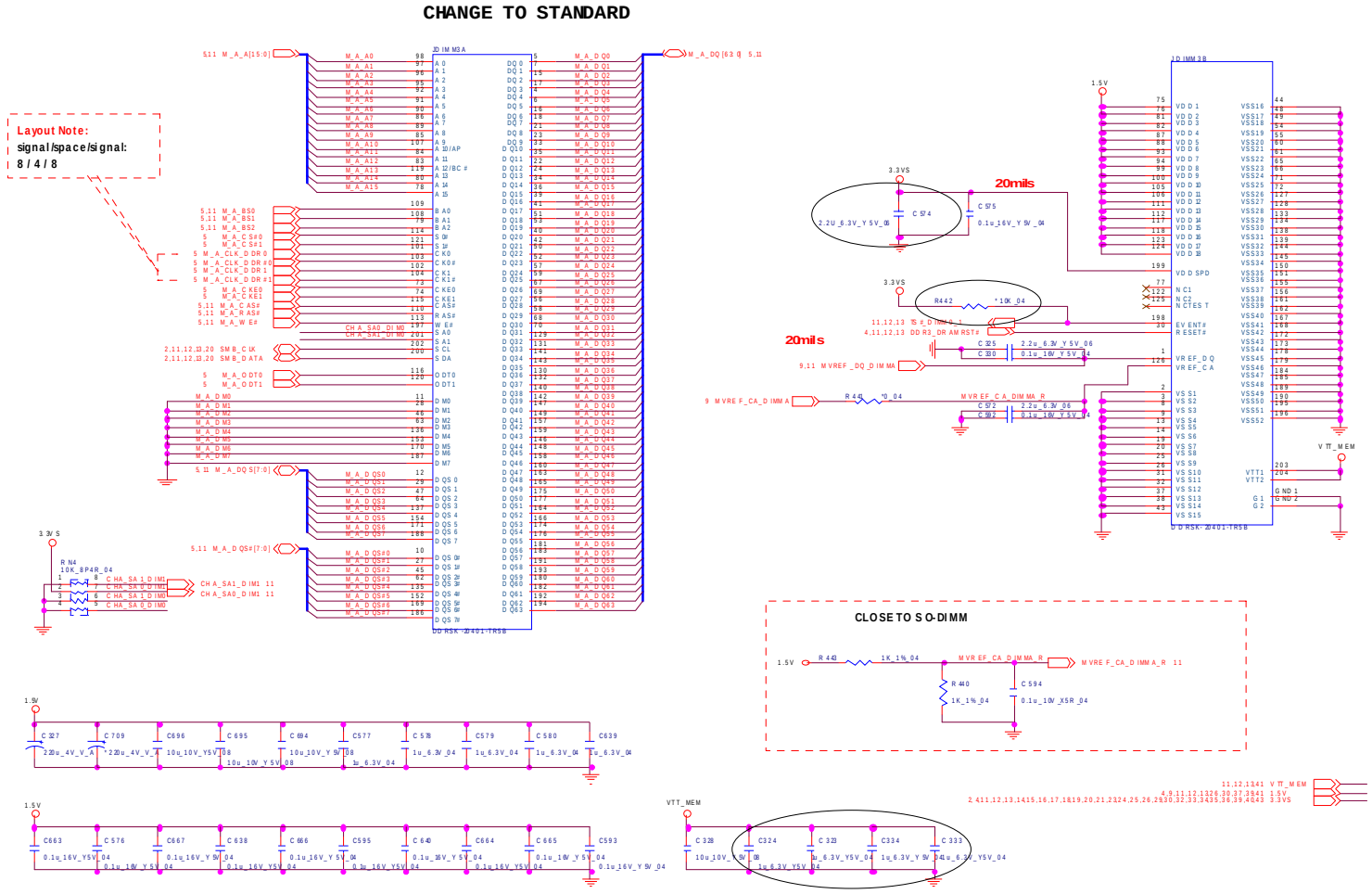

Sheet 10 of 57
DDRIII CHA SO-DIMM _0

DDRIII CHA SO-DIMM_1

Channel A SO-DIMM 1

CHANGE TO STANDARD

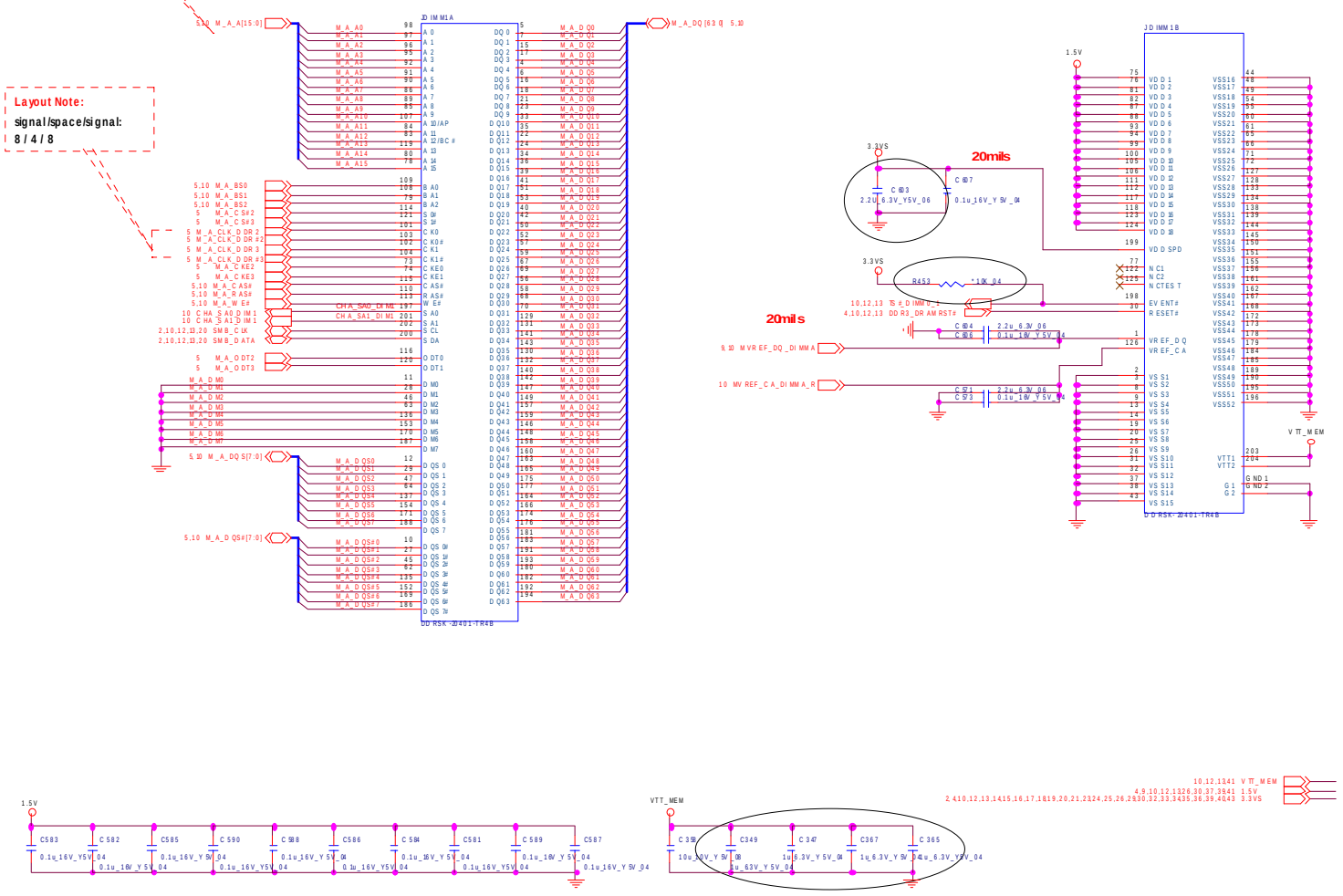

Sheet 11 of 57
IBEXPEAK - M 1/9

DDRIII CHB SO-DIMM_0

Channel B SO-DIMM 0

CHANGE TO STANDARD

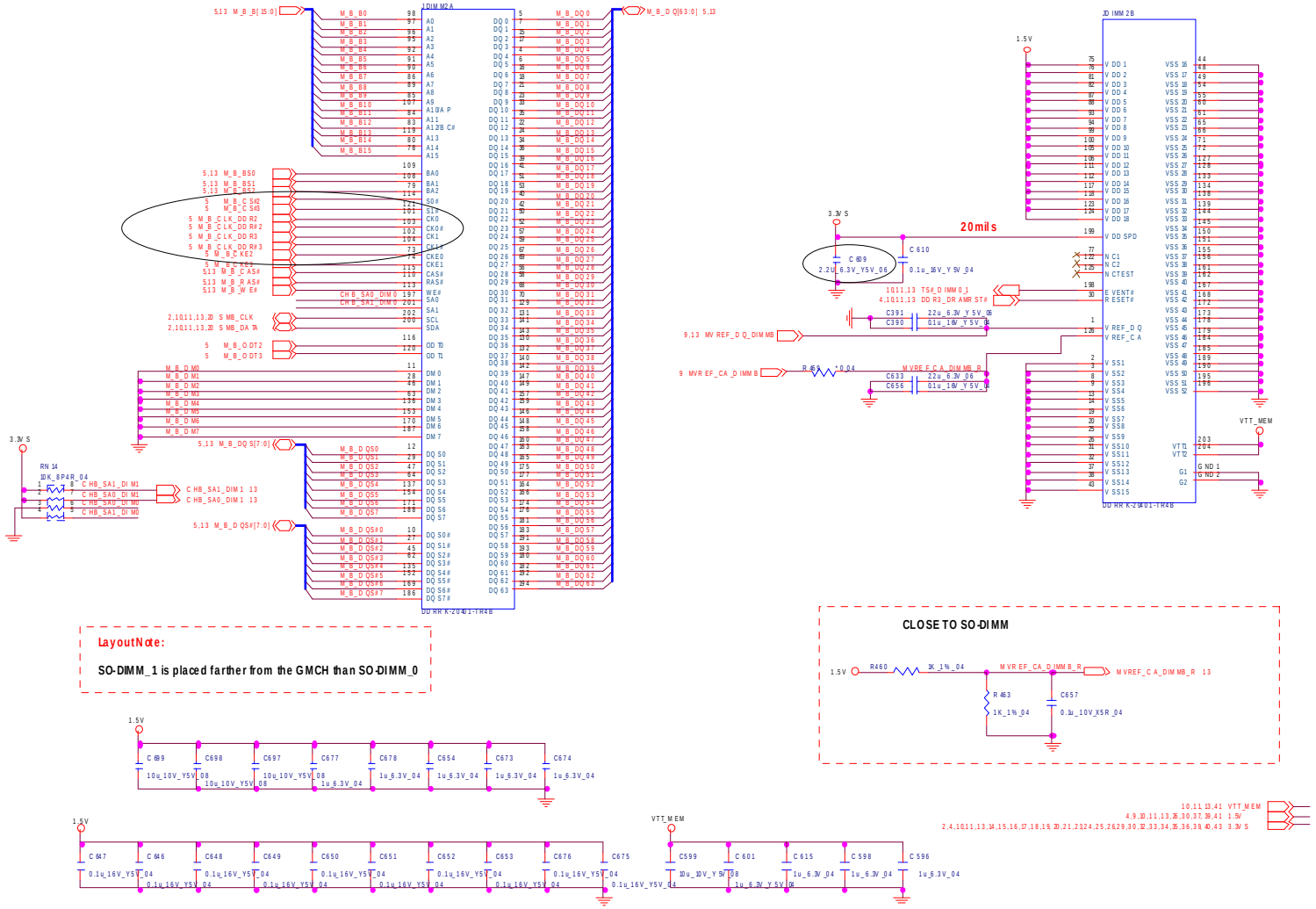

Sheet 12 of 57
DDRIII CHB SO-DIMM _0

DDRIII CHB SO-DIMM_1

Channel B SO-DIMM 1

Sheet 13 of 57
DDRIII CHB SO-DIMM _1

CHANGE TO STANDARD

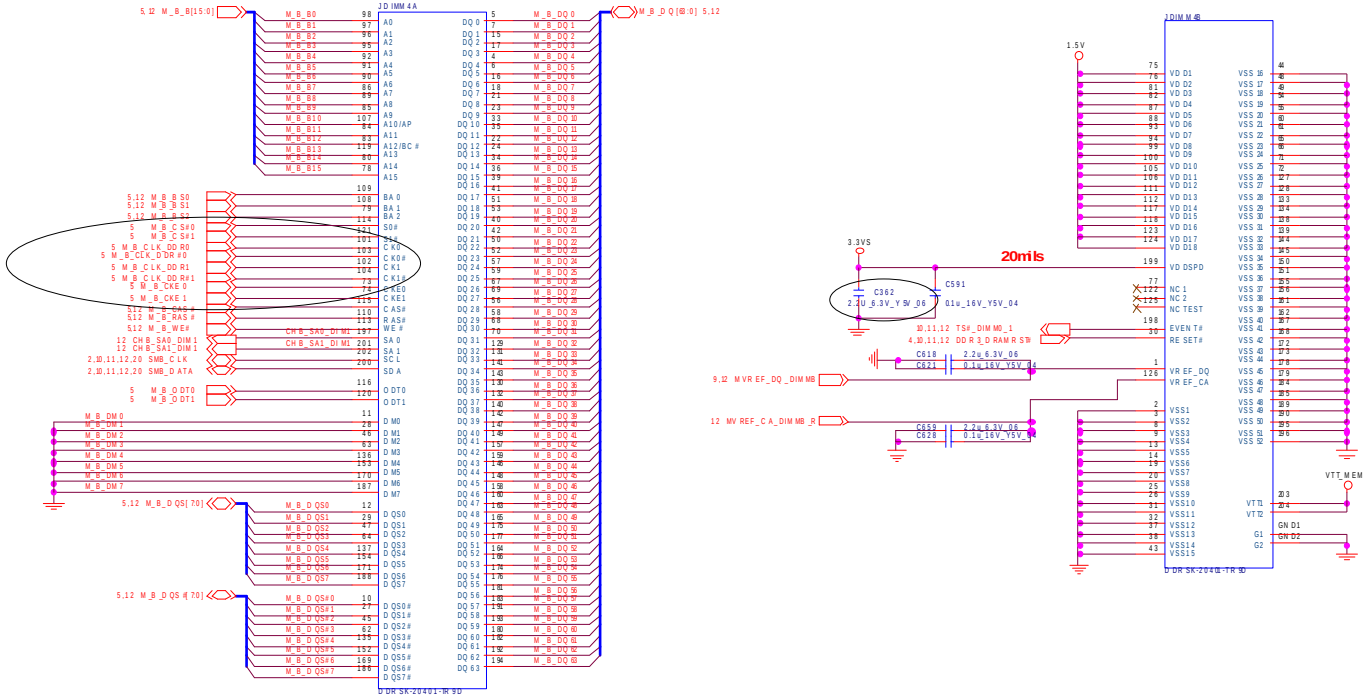

Layout Note:

SO-DIMM_1 is placed farther from the GMCH than SO-DIMM_0

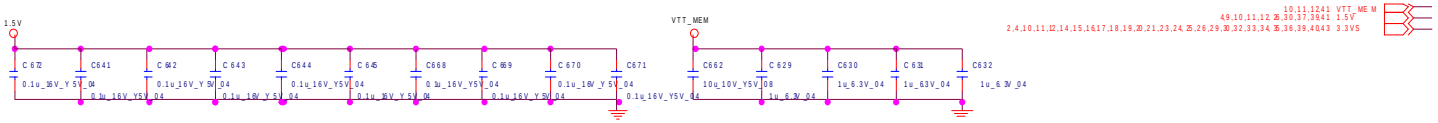

MXM PCI-E

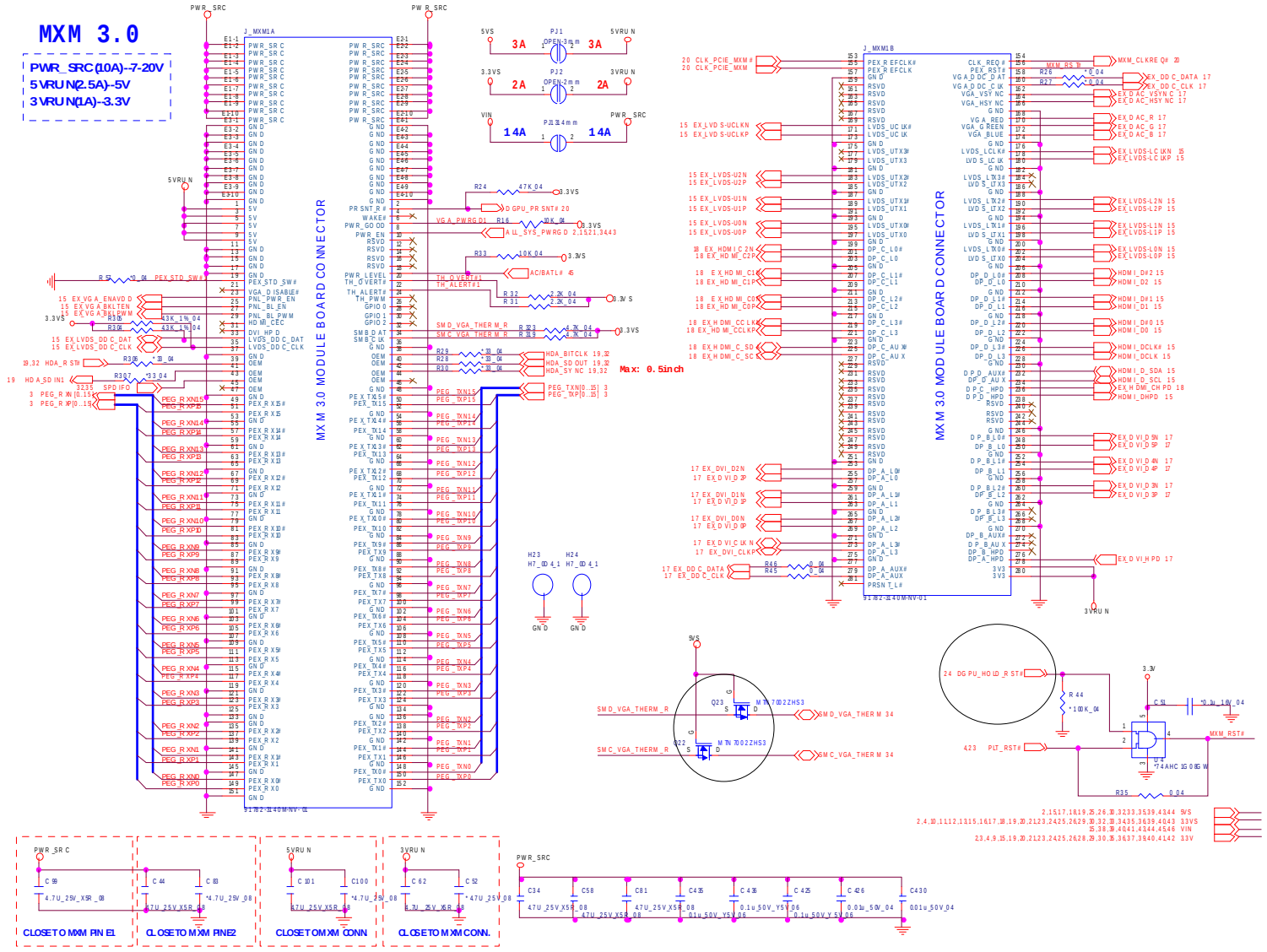

Sheet 14 of 57
MXM PCI-E

Panel, Inverter, CRT

Sheet 15 of 57
Panel, Inverter, CRT

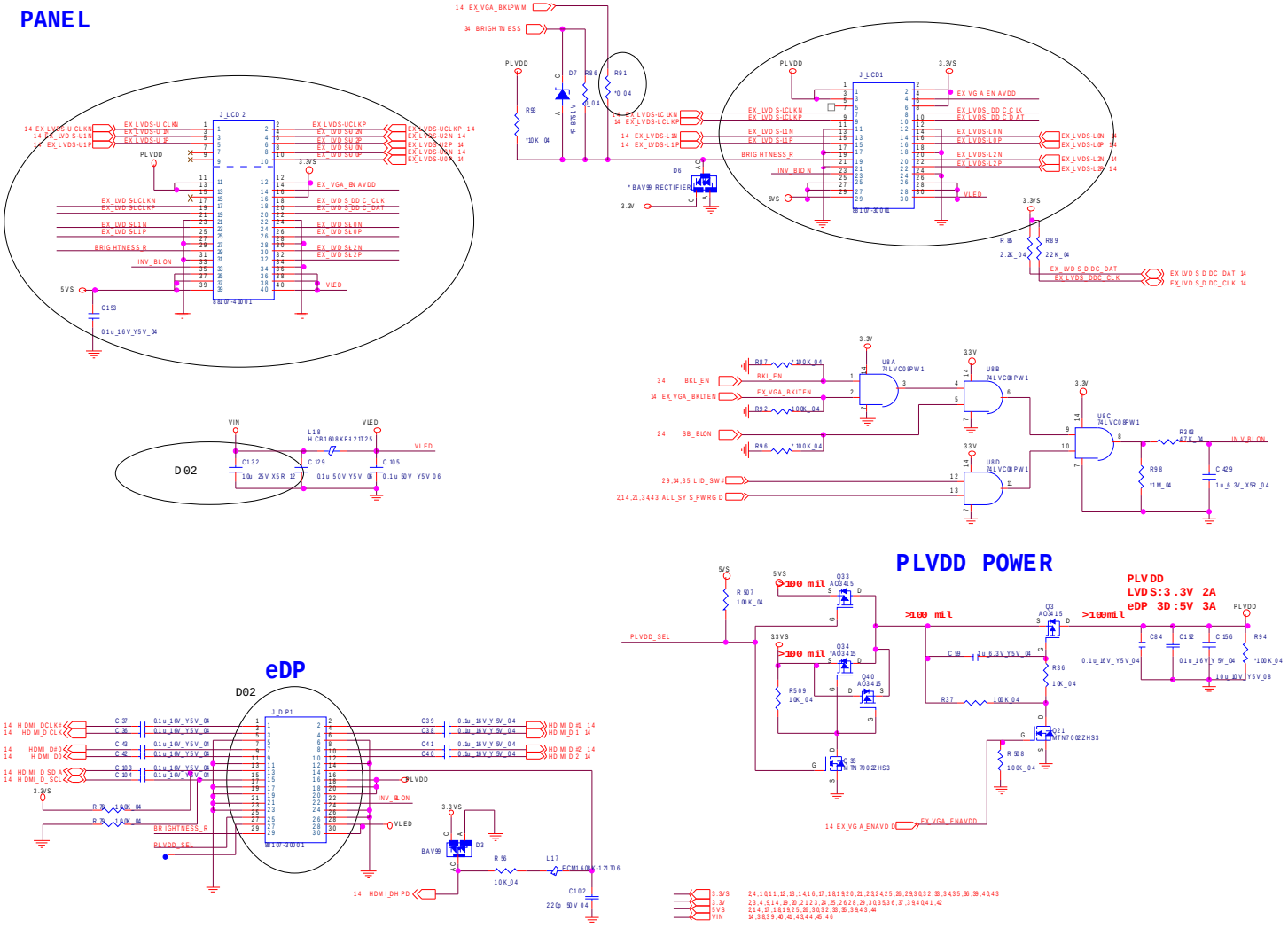

1394_JMB380C

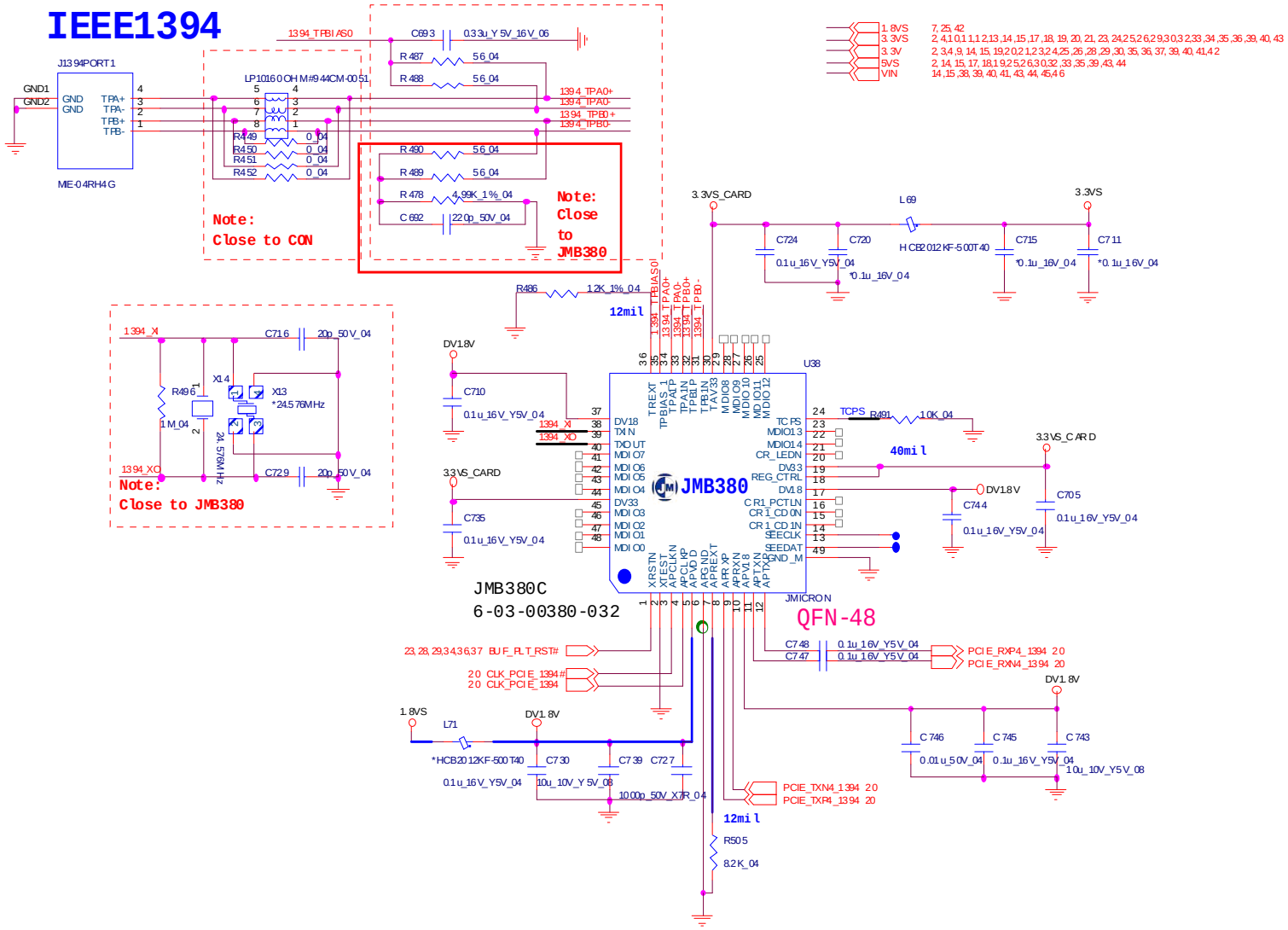

Sheet 16 of 57
1394_JMB380C

DVI

Sheet 17 of 57
DVI

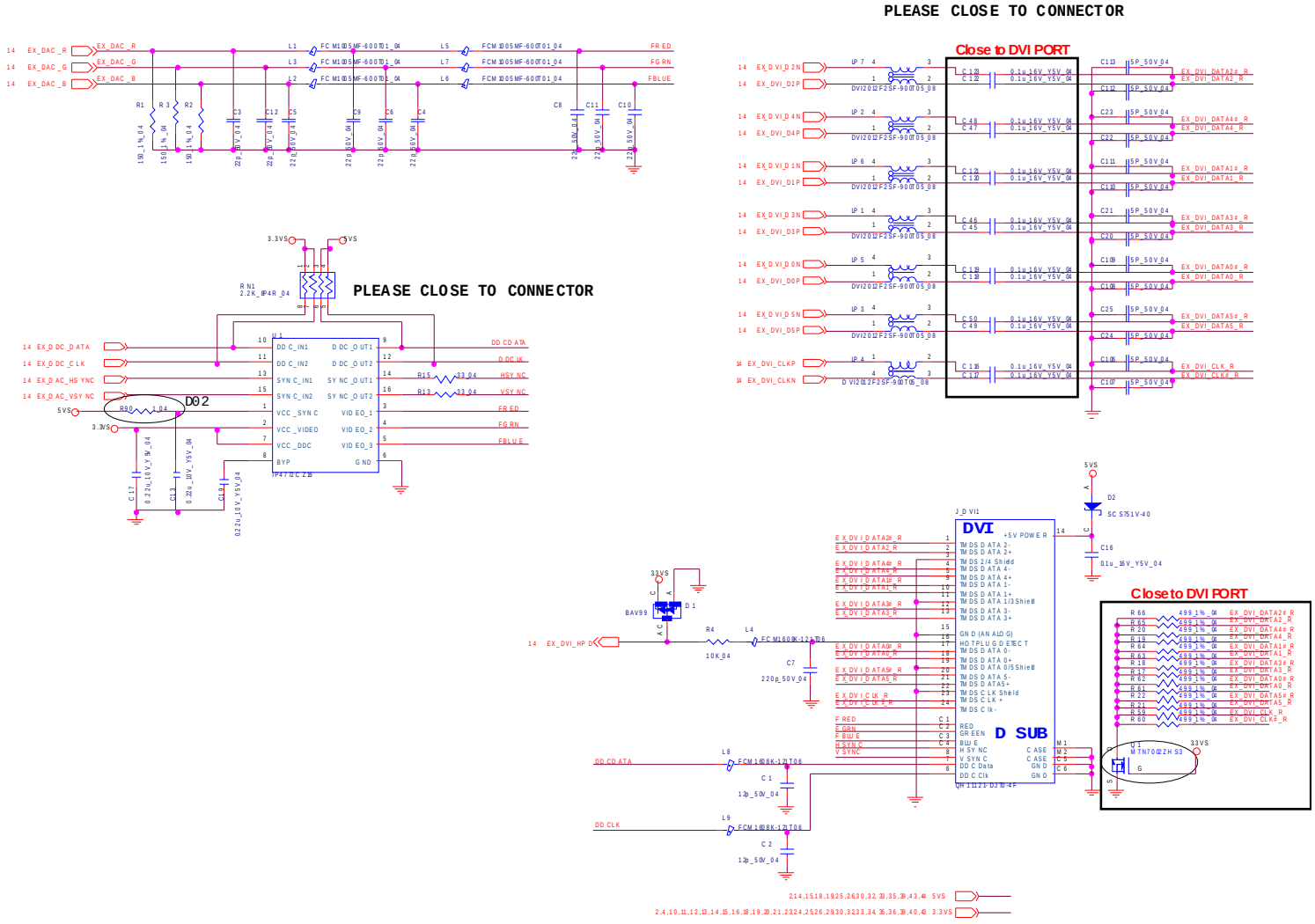

HDMI

HDMI CONNECTOR

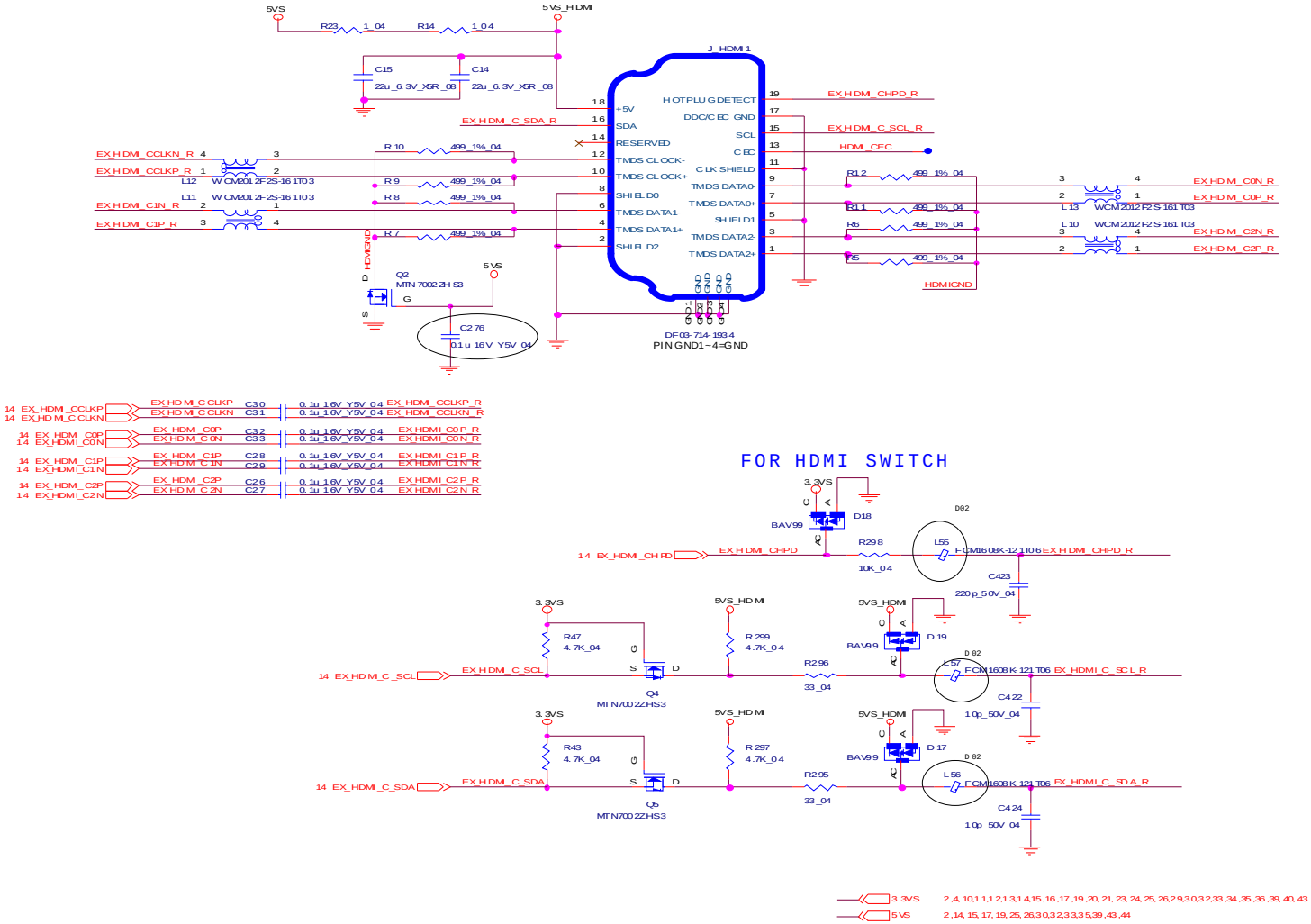

Sheet 18 of 57
HDMI

CougarPoint - M 1/9

Sheet 19 of 57
CougarPoint - M 1/9

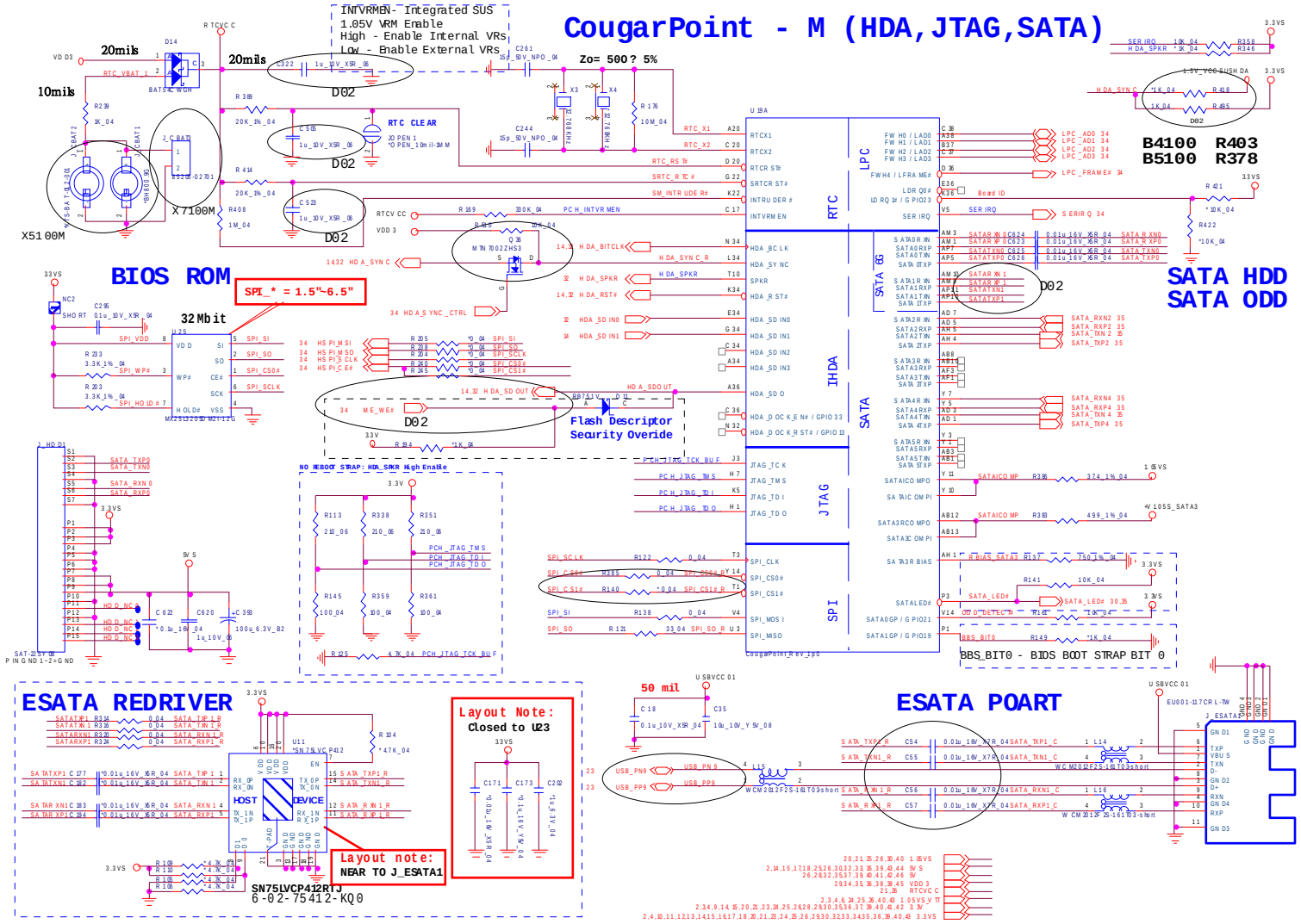

CougarPoint - M 2/9

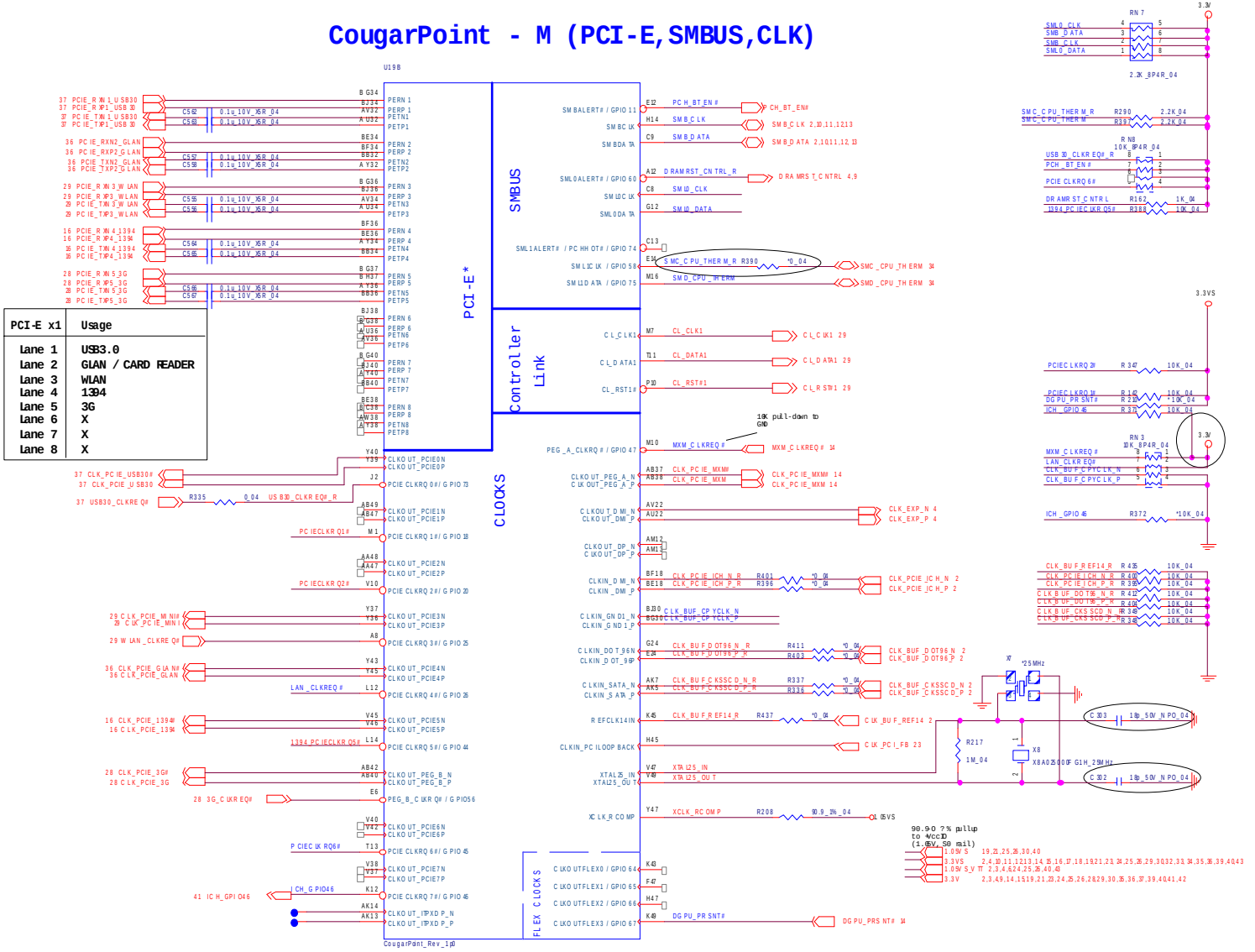

Sheet 20 of 57
CougarPoint - M 2/9

CougarPoint - M 3/9

Sheet 21 of 57
CougarPoint - M 3/9

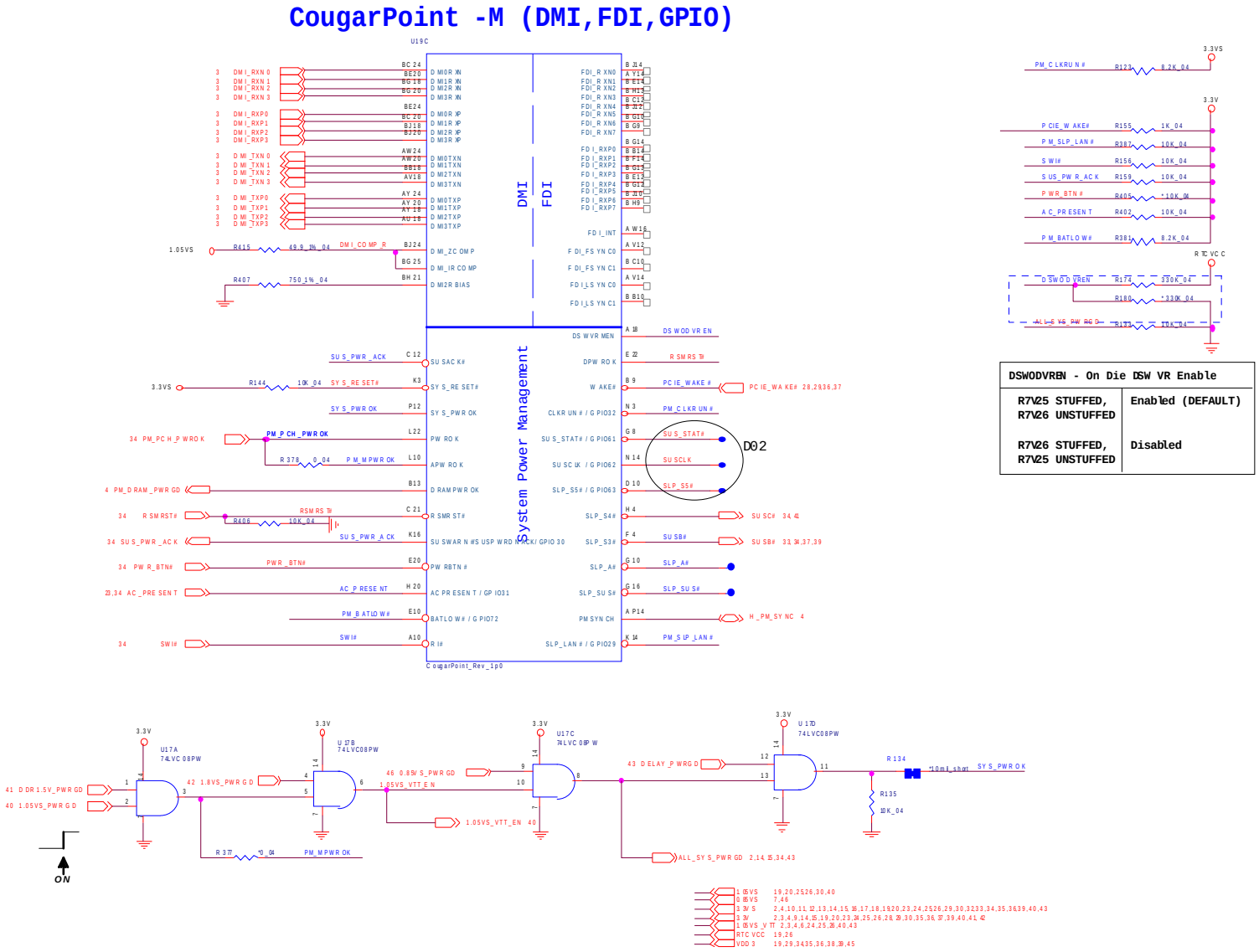

CougarPoint - M 4/9

CougarPoint -M (LVDS,DDI)

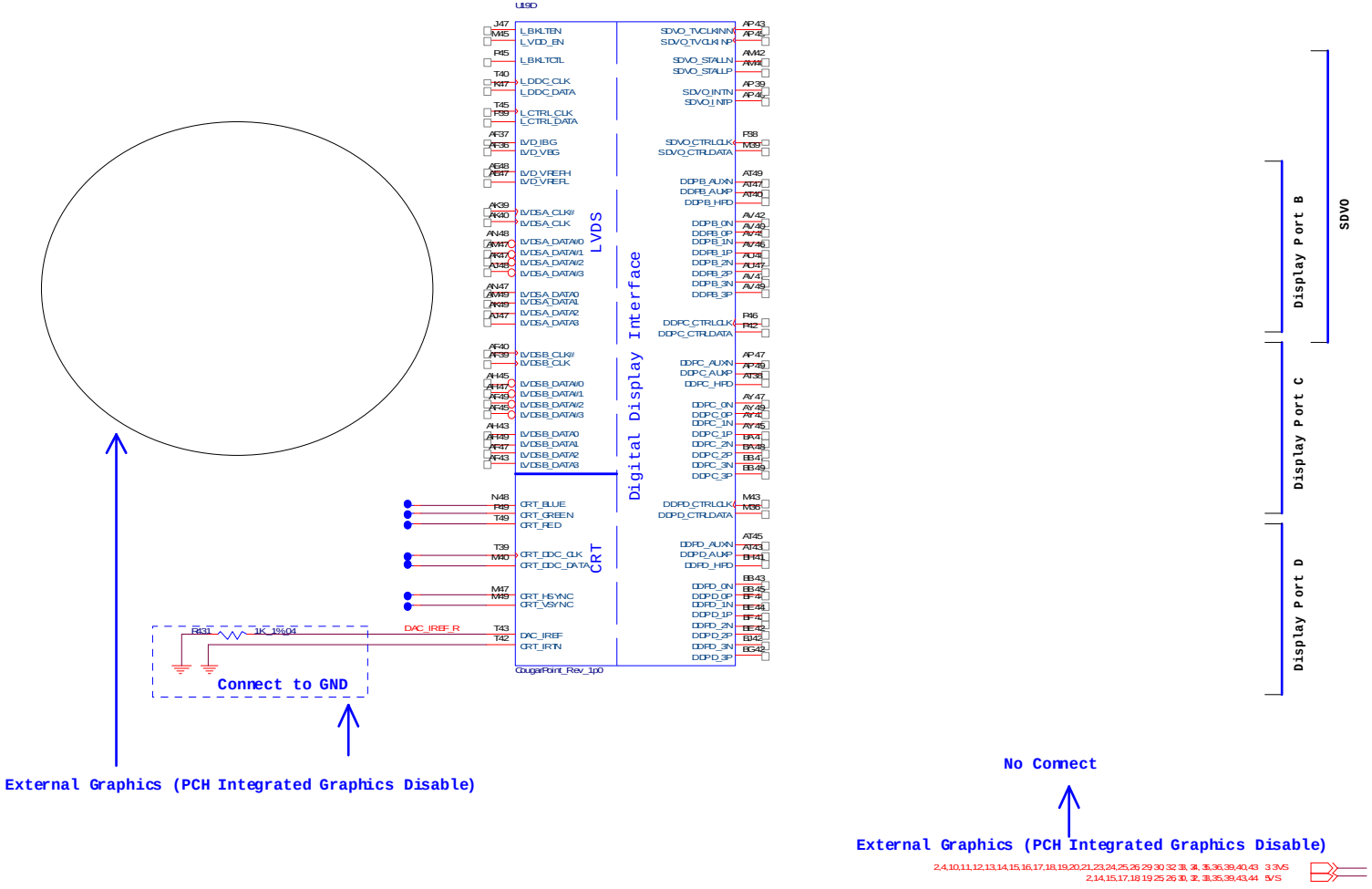

Sheet 22 of 57
CougarPoint - M 4/9

CougarPoint - M 5/9

Sheet 23 of 57
CougarPoint - M 5/9

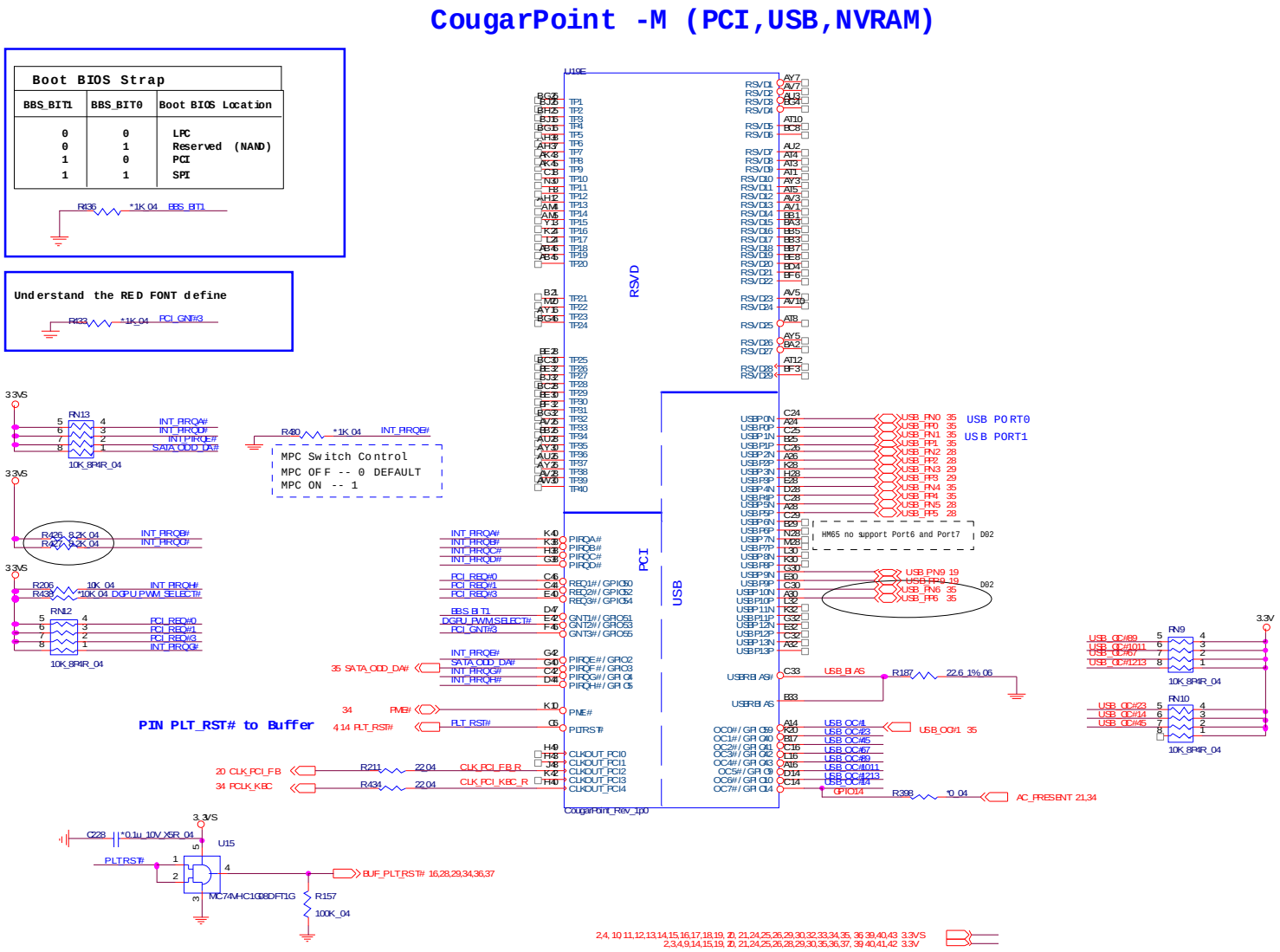

CougarPoint - M 6/9

CougarPoint - M (GPIO,VSS_NCTF,RSVD)

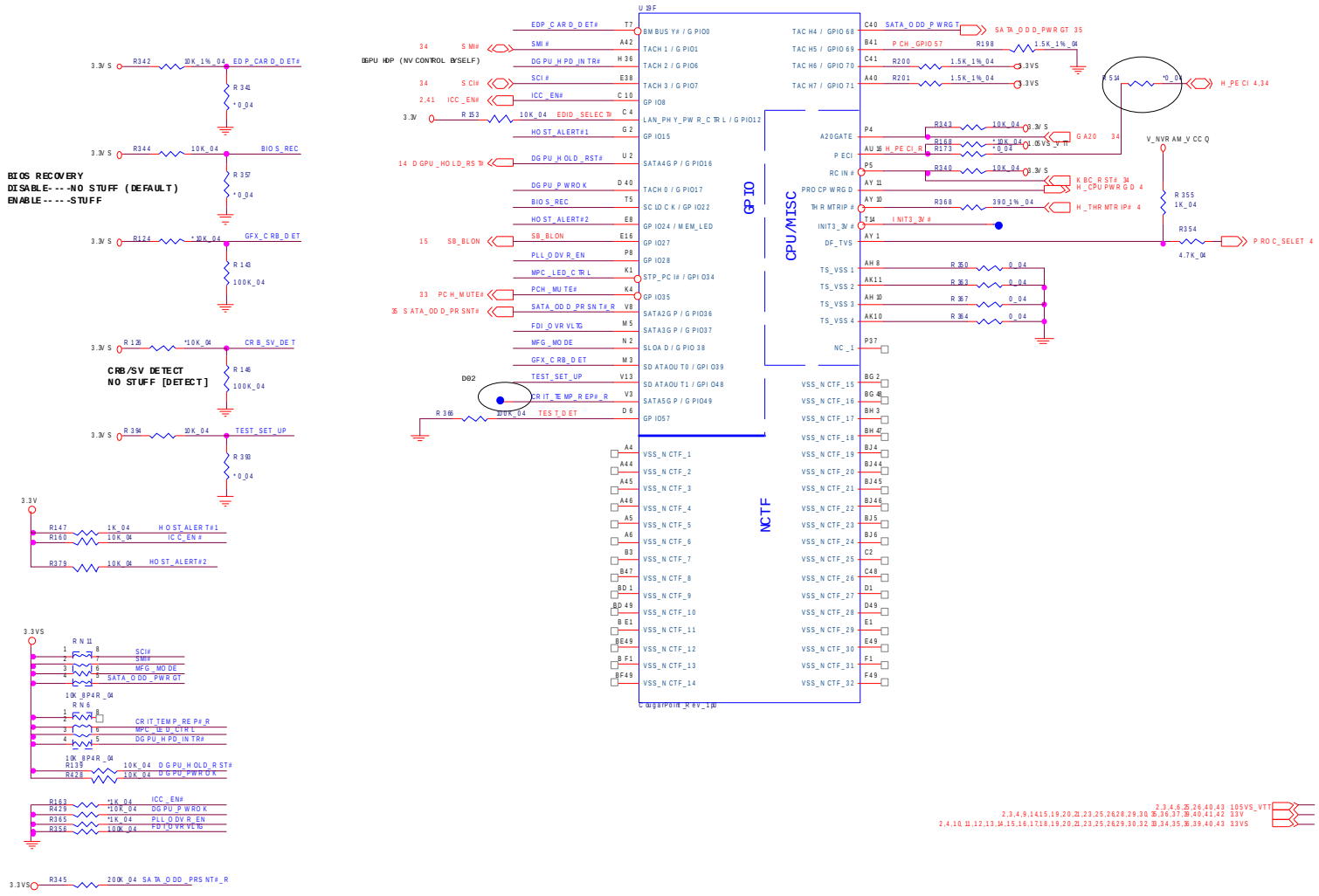

Sheet 24 of 57
CougarPoint - M 6/9

CougarPoint - M 7/9

Sheet 25 of 57
CougarPoint - M 7/9

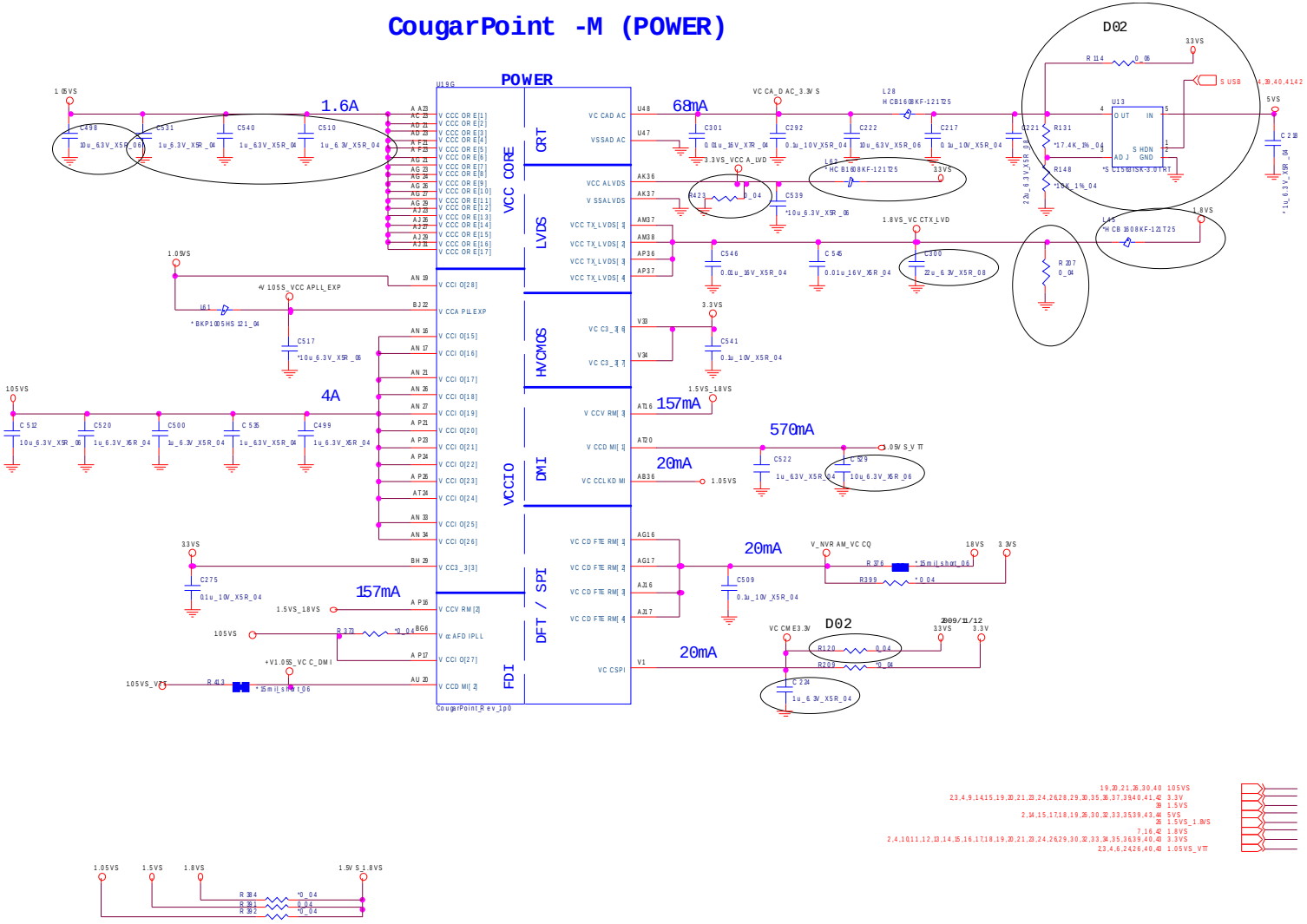

CougarPoint - M 8/9

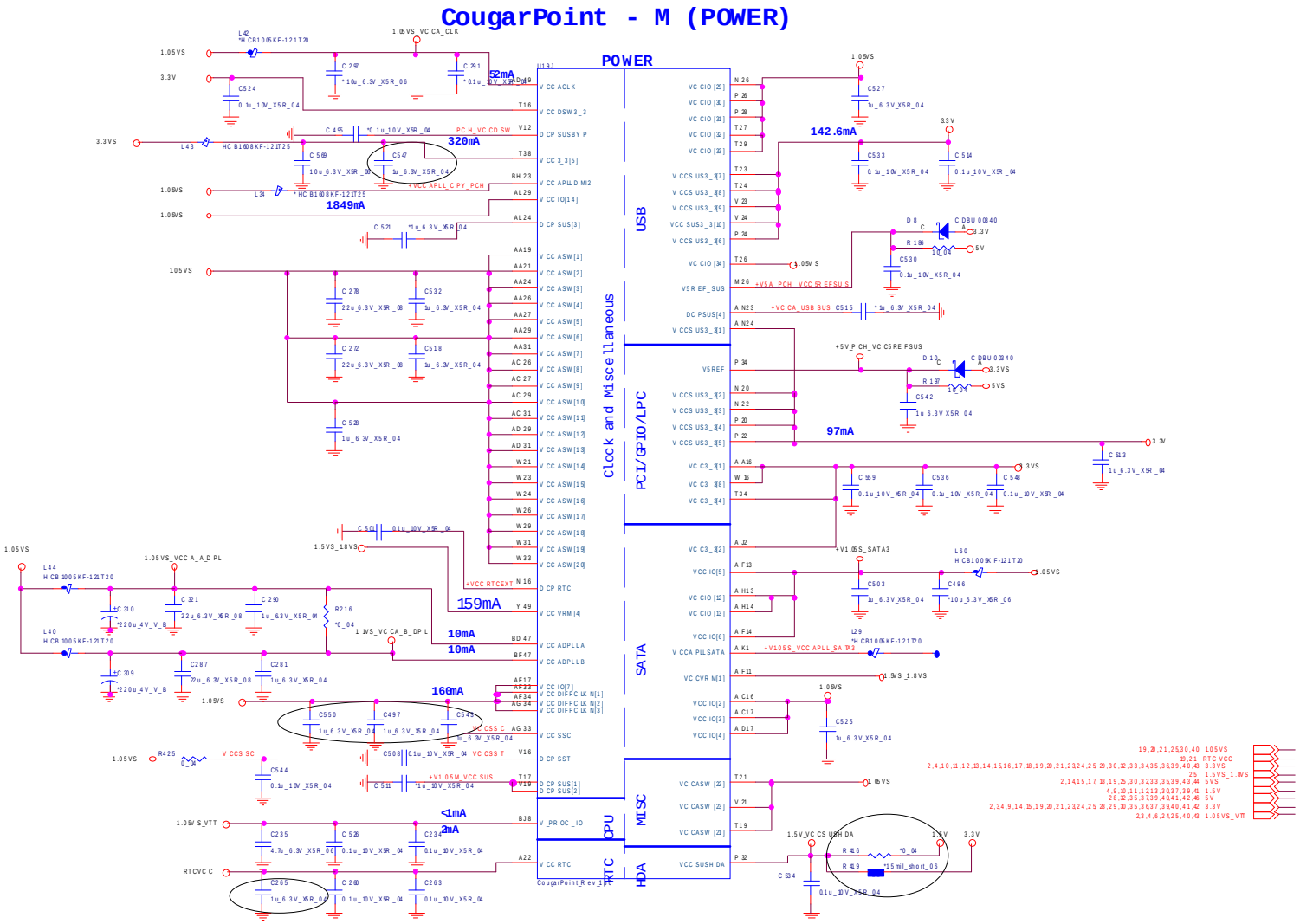

Sheet 26 of 57
CougarPoint - M 8/9

CougarPoint - M 9/9

Sheet 27 of 57
CougarPoint - M 9/9

CougarPoint -M (GND)

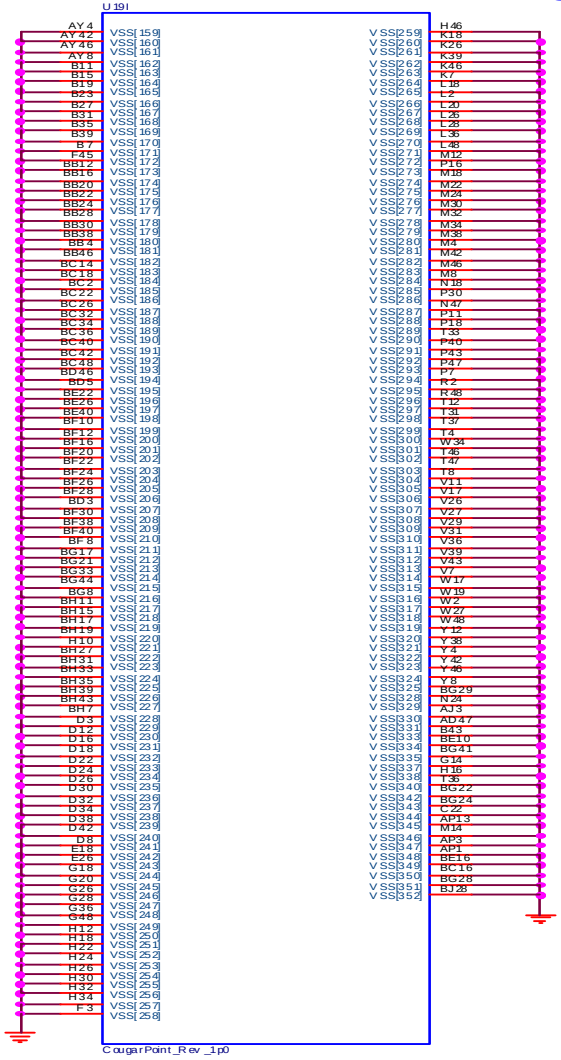

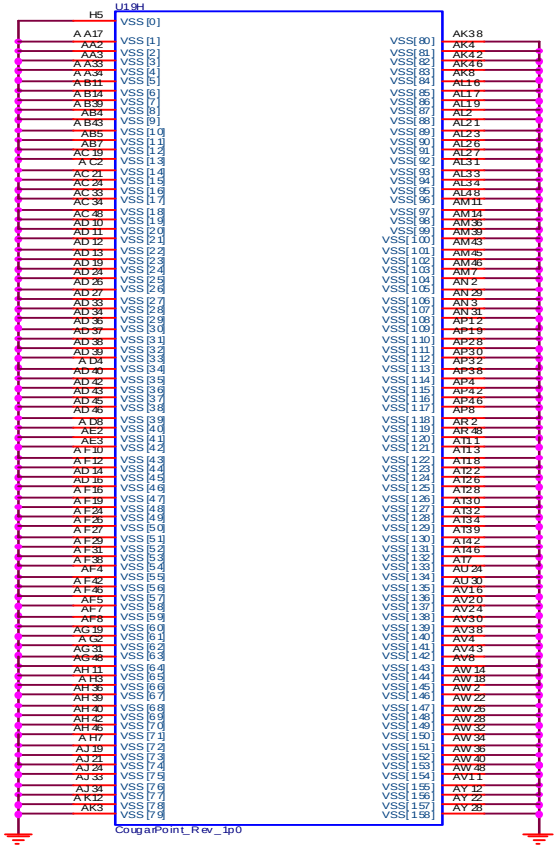

3G, CCD

3G

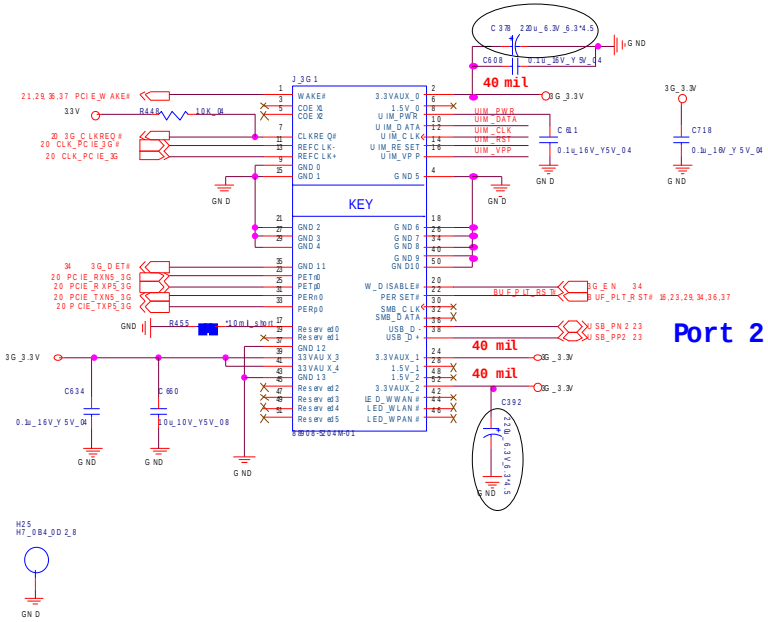

3G POWER

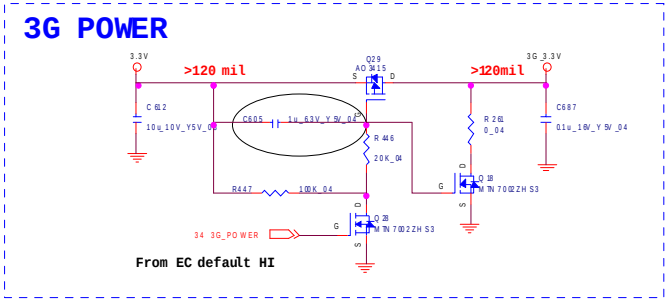

Sheet 28 of 57
3G, CCD

SIM CONN

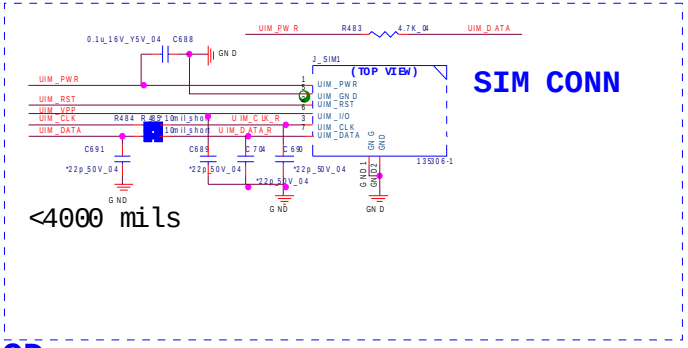

TV ANTENNA

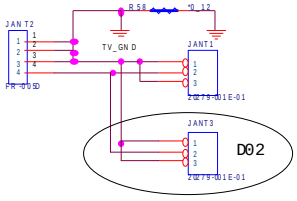

CCD

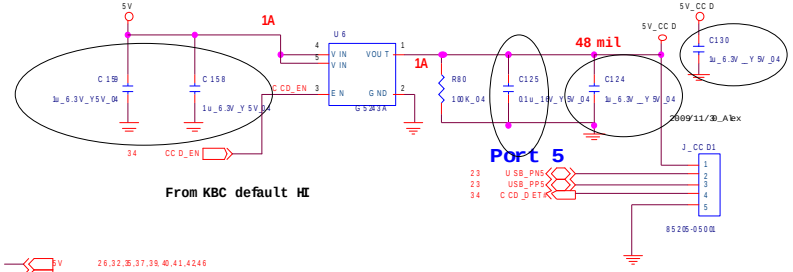

Mini PCIE, LID

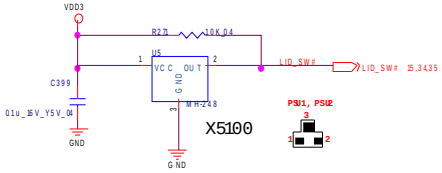

LID SWITCH IC

Sheet 29 of 57
Mini PCIE, LID

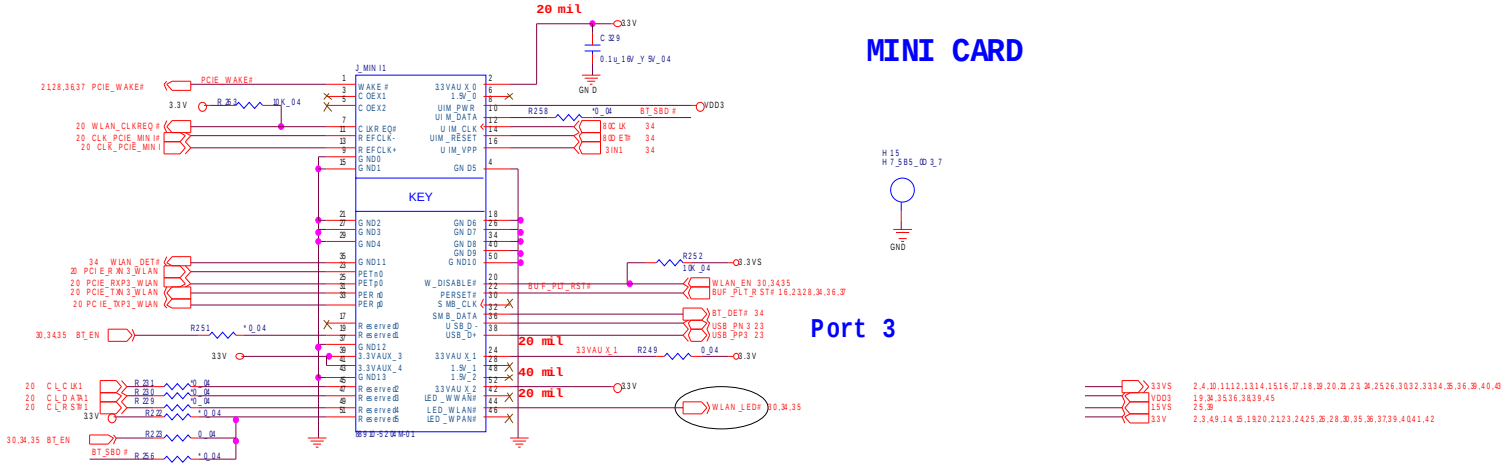

LED, Hotkey, LID SW, Fan

CPU FAN CONTROL

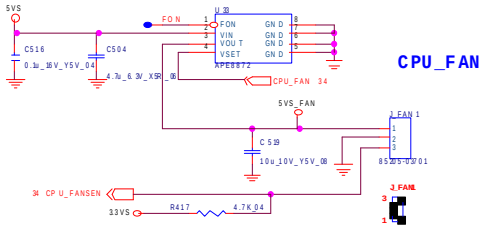

CPU_FAN

VGA FAN CONTROL

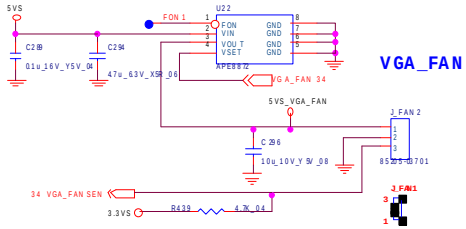

VGA_FAN

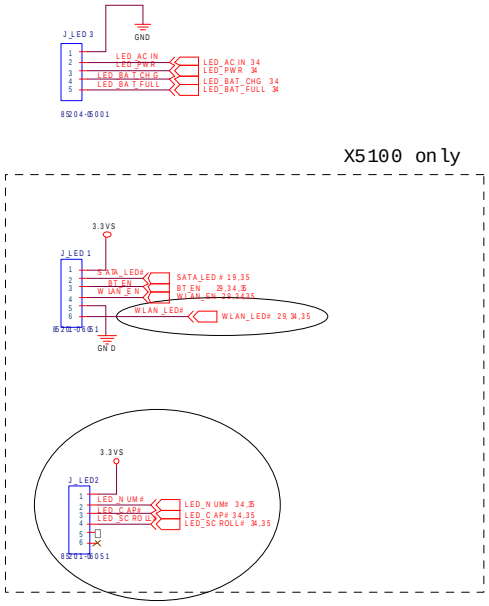

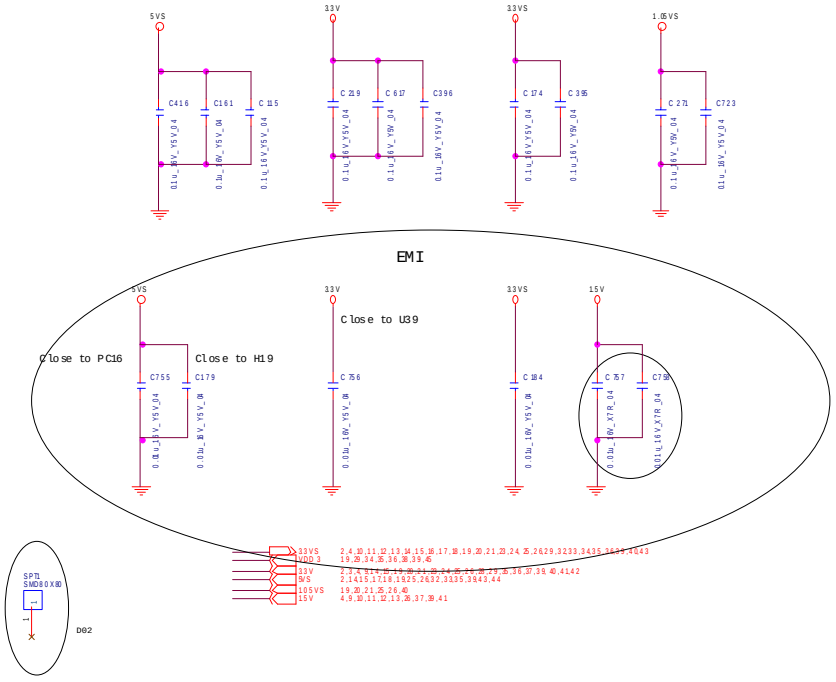

Sheet 30 of 57
LED, Hotkey, LID SW, Fan

RJ45

Sheet 31 of 57
RJ45

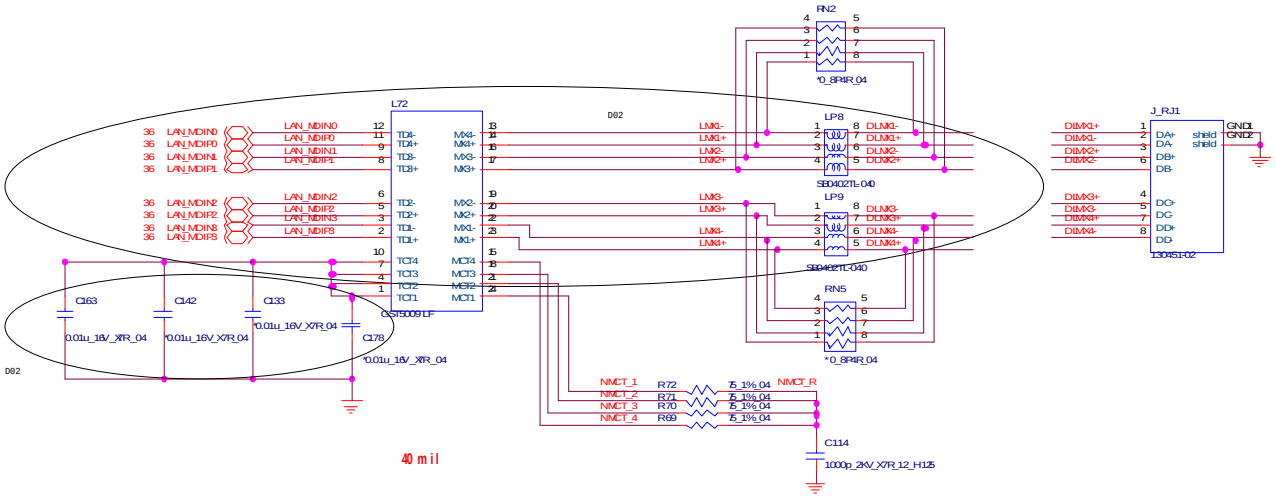

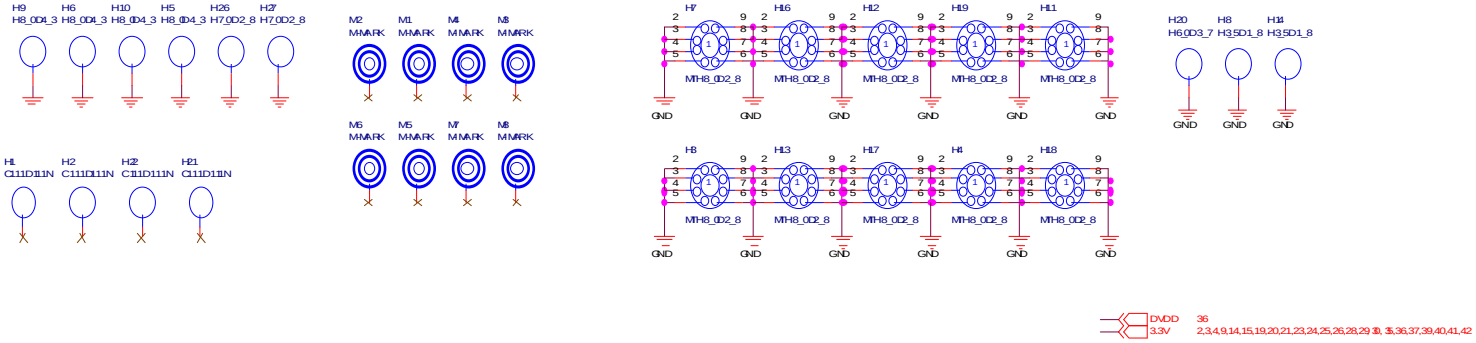

Codec Realtek ALC892

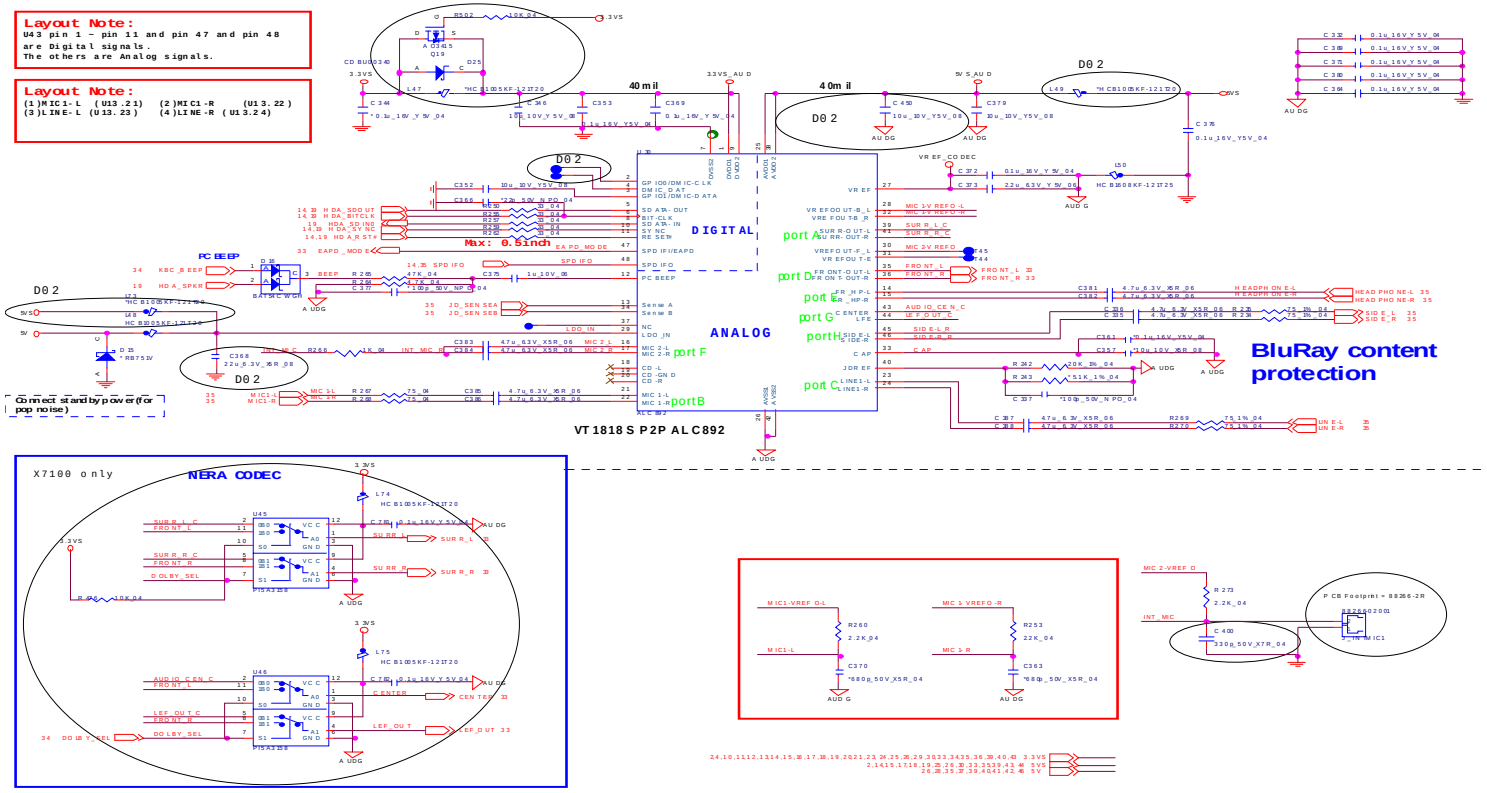

Sheet 32 of 57
Codec Realtek
ALC892

APA2010D1-TPA2008D2

Sheet 33 of 57
APA2010D1-TPA2008D2

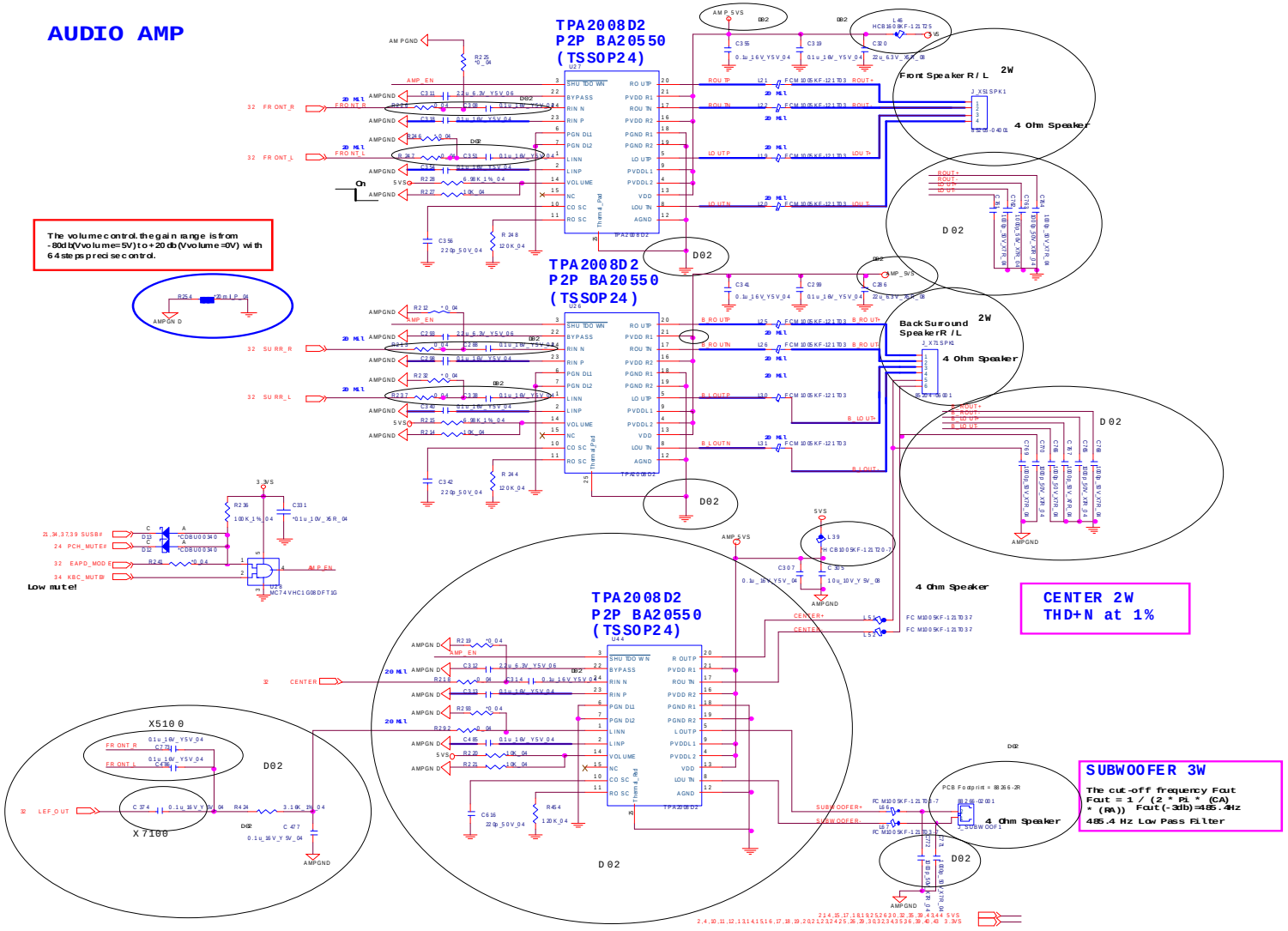

KBC-ITE IT8519

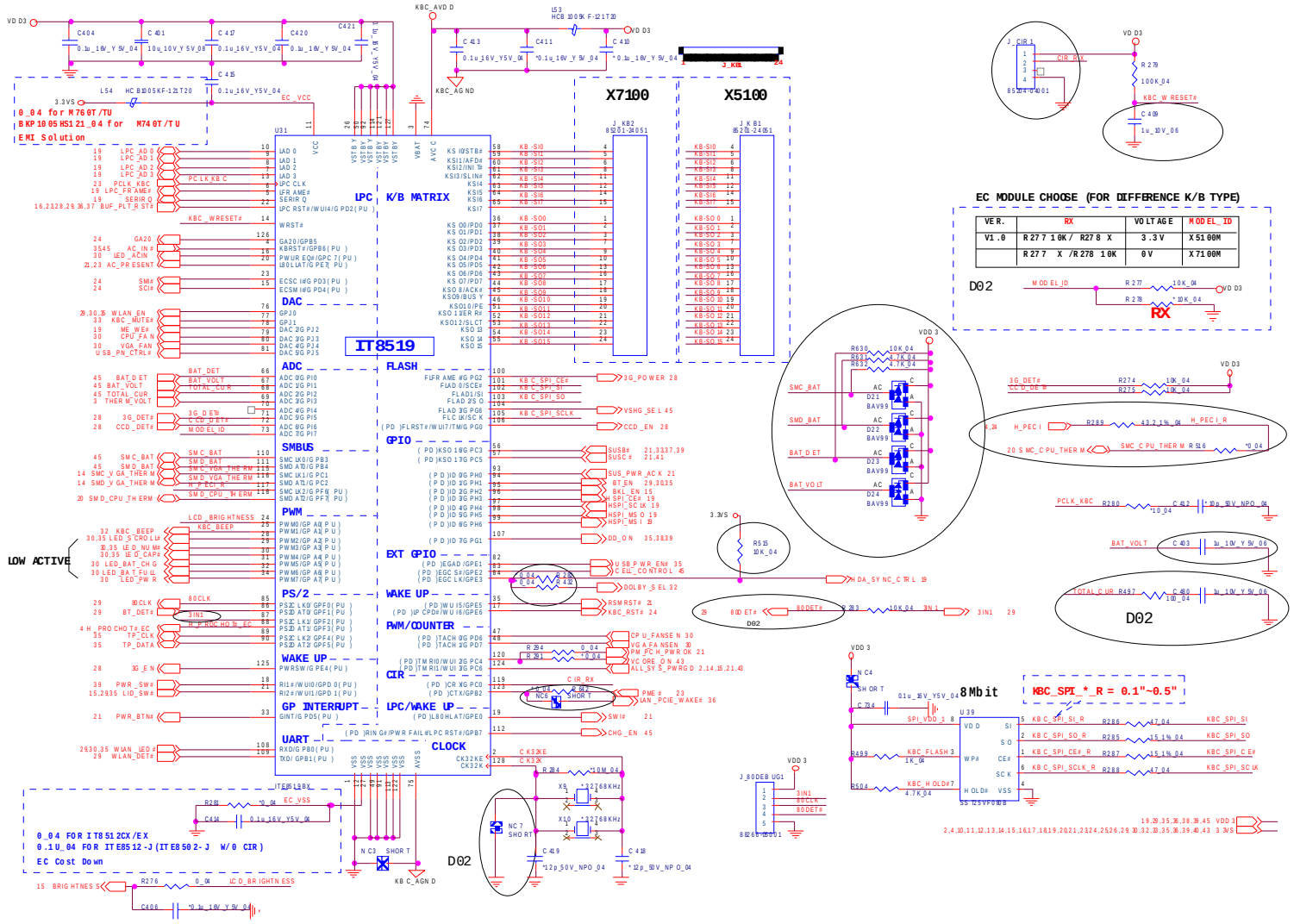

Sheet 34 of 57
KBC-ITE IT8519

USB, TP, FP, MULTI-CONN

Sheet 35 of 57
USB, TP, FP, MULTI-CONN

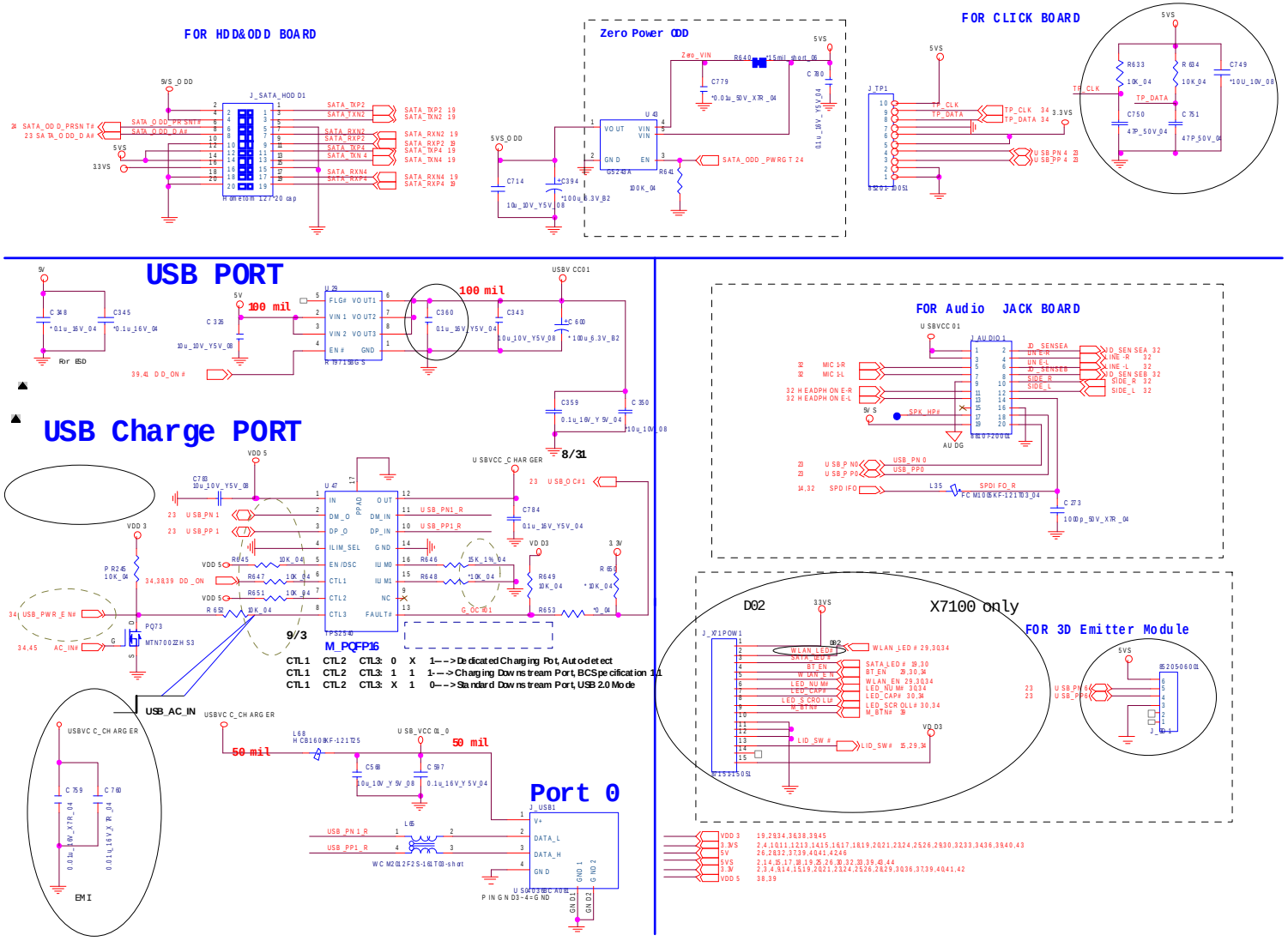

Card Reader (JMC 251C)

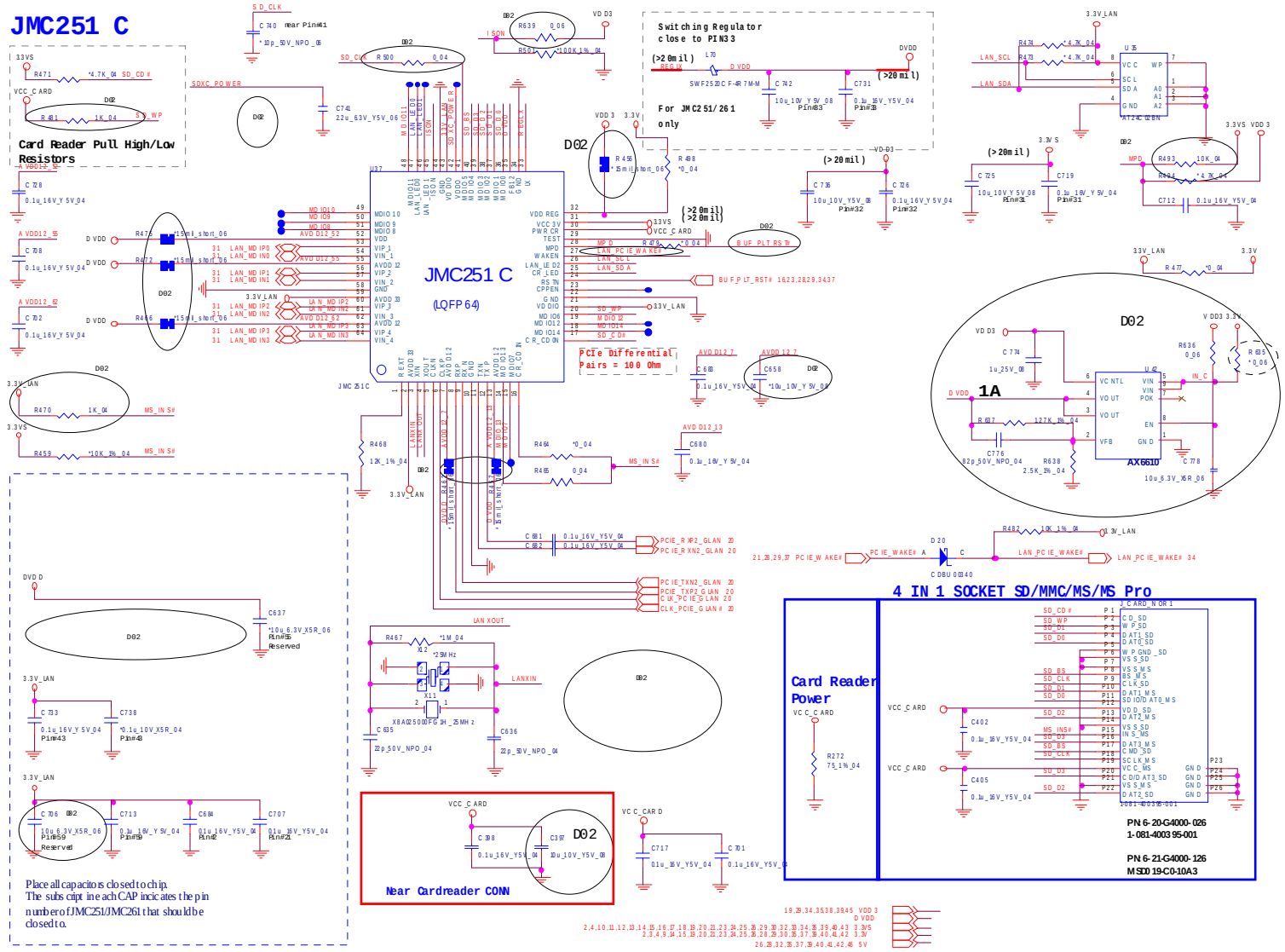

Sheet 36 of 57
Card Reader (JMC 251C)

USB 3.0

Sheet 37 of 57
USB 3.0

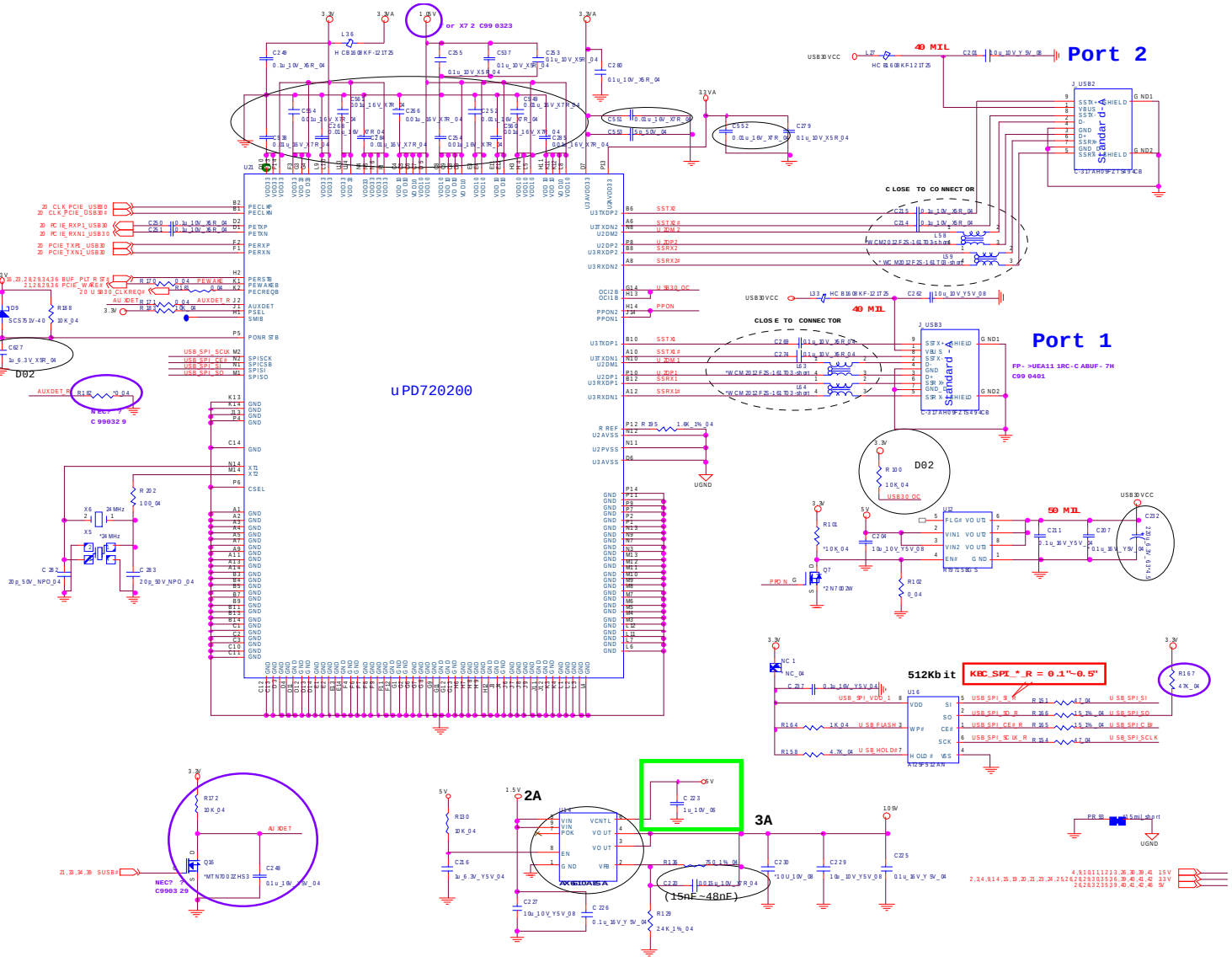

VDD3, VDD5

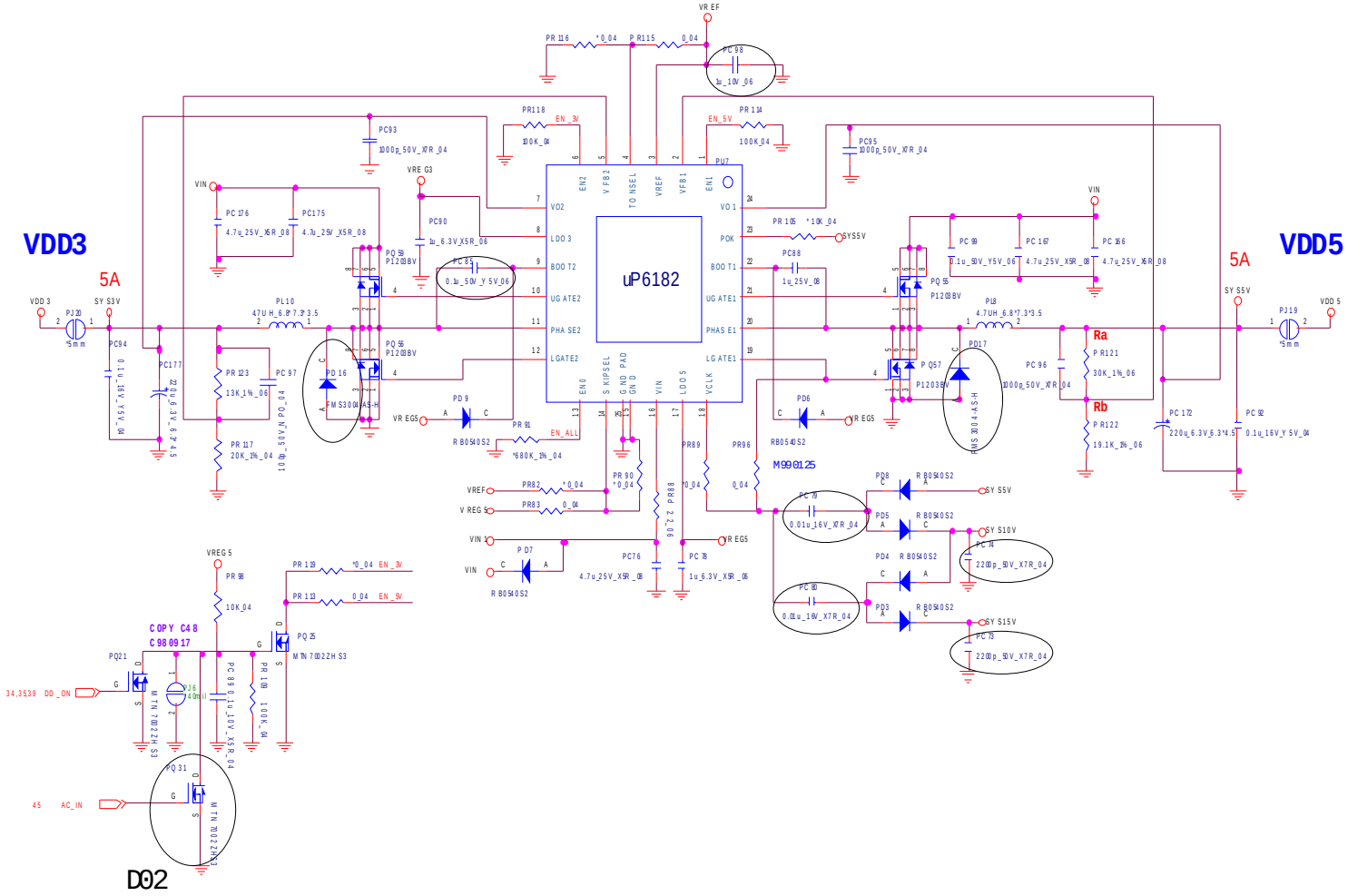

Sheet 38 of 57
VDD3, VDD5

5V, 3.3V, 5VS, 3VS, 1.5VS, VIN1

Sheet 39 of 57
5V, 3.3V, 5VS, 3VS, 1.5VS, VIN1

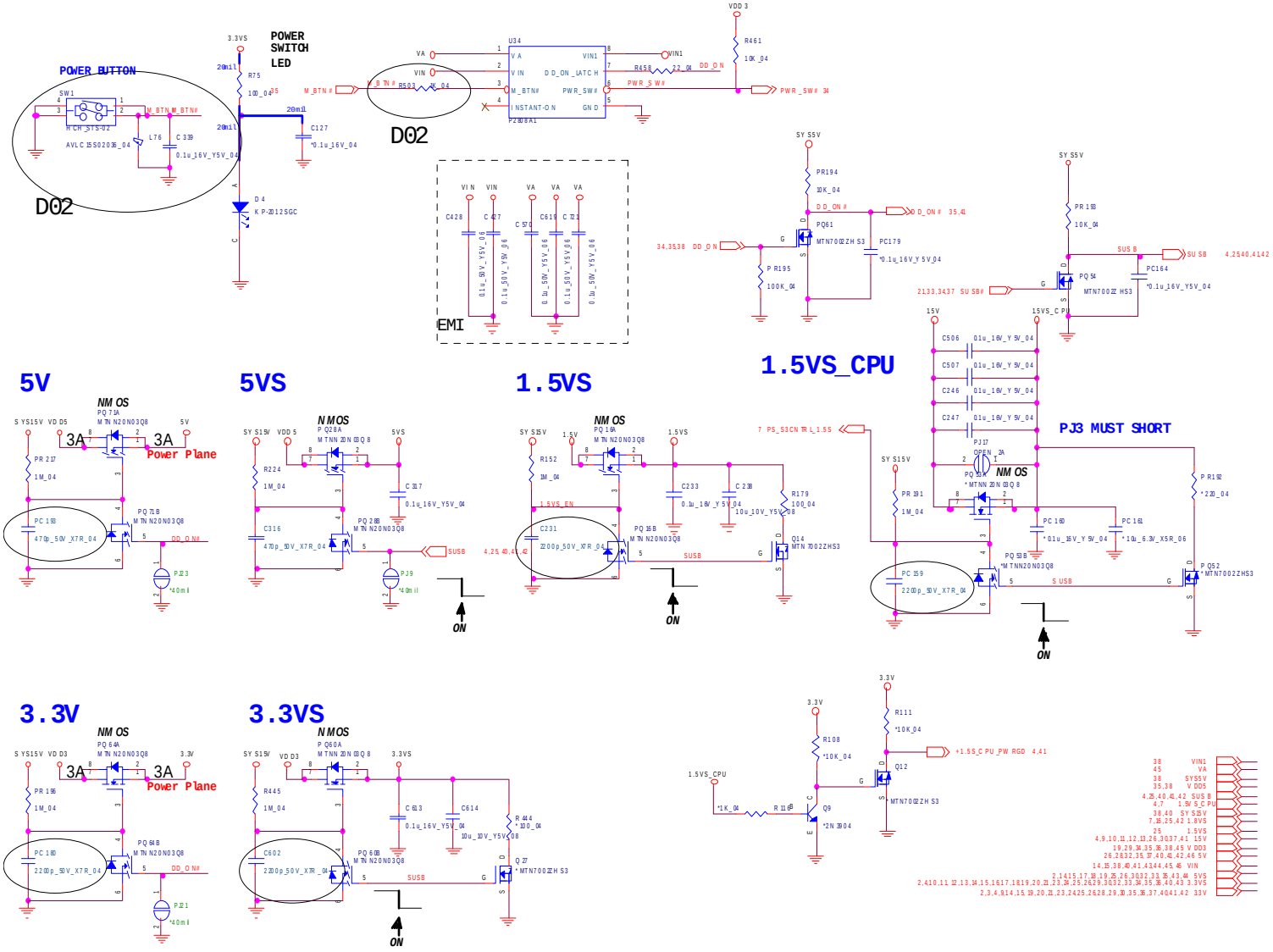

Power 1.05VS, 1.05VS_VTT

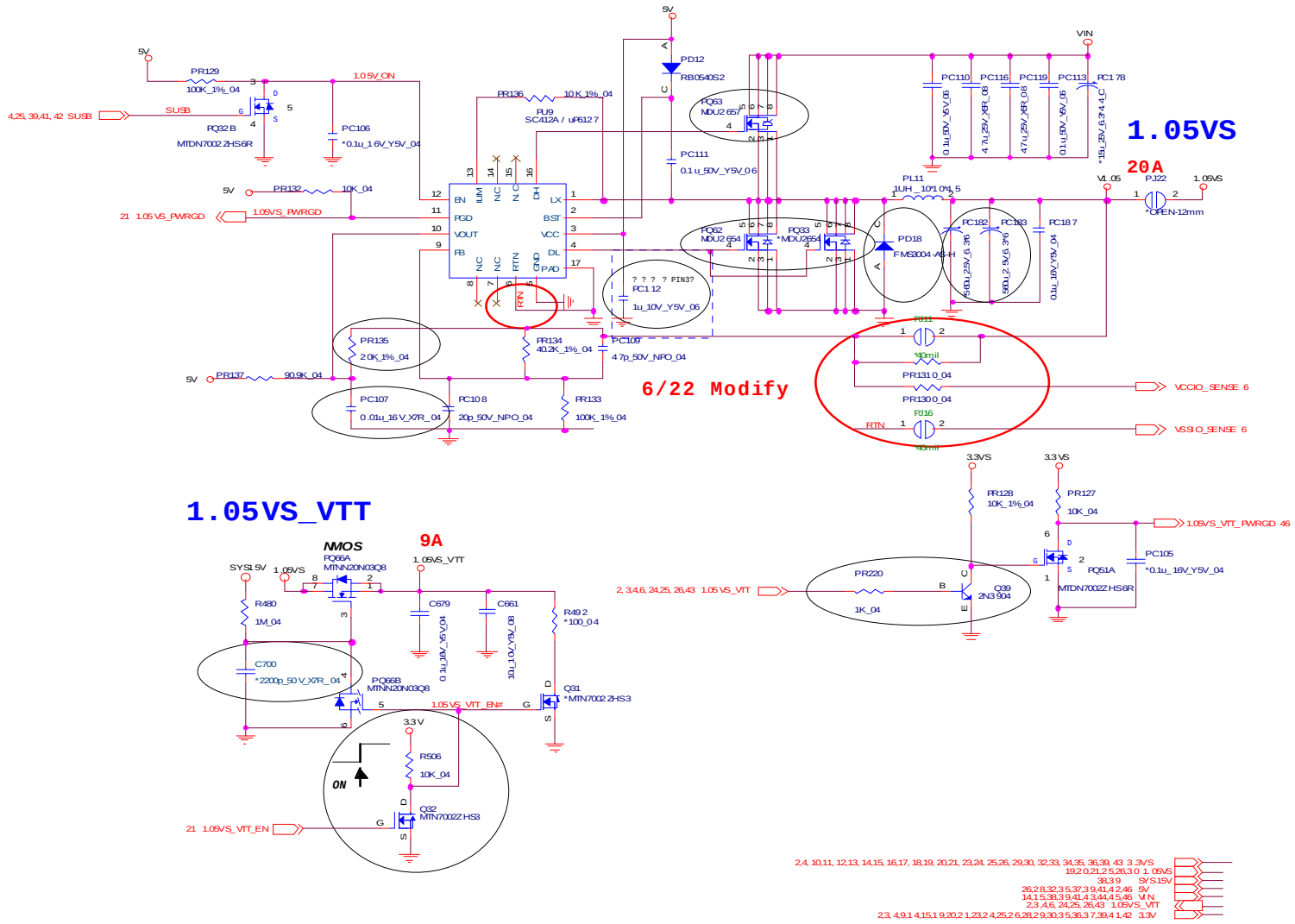

Sheet 40 of 57
Power 1.05VS,
1.05VS_VTT

Power 1.5V/VTT_MEM

Sheet 41 of 57
Power 1.5V/
VTT_MEM

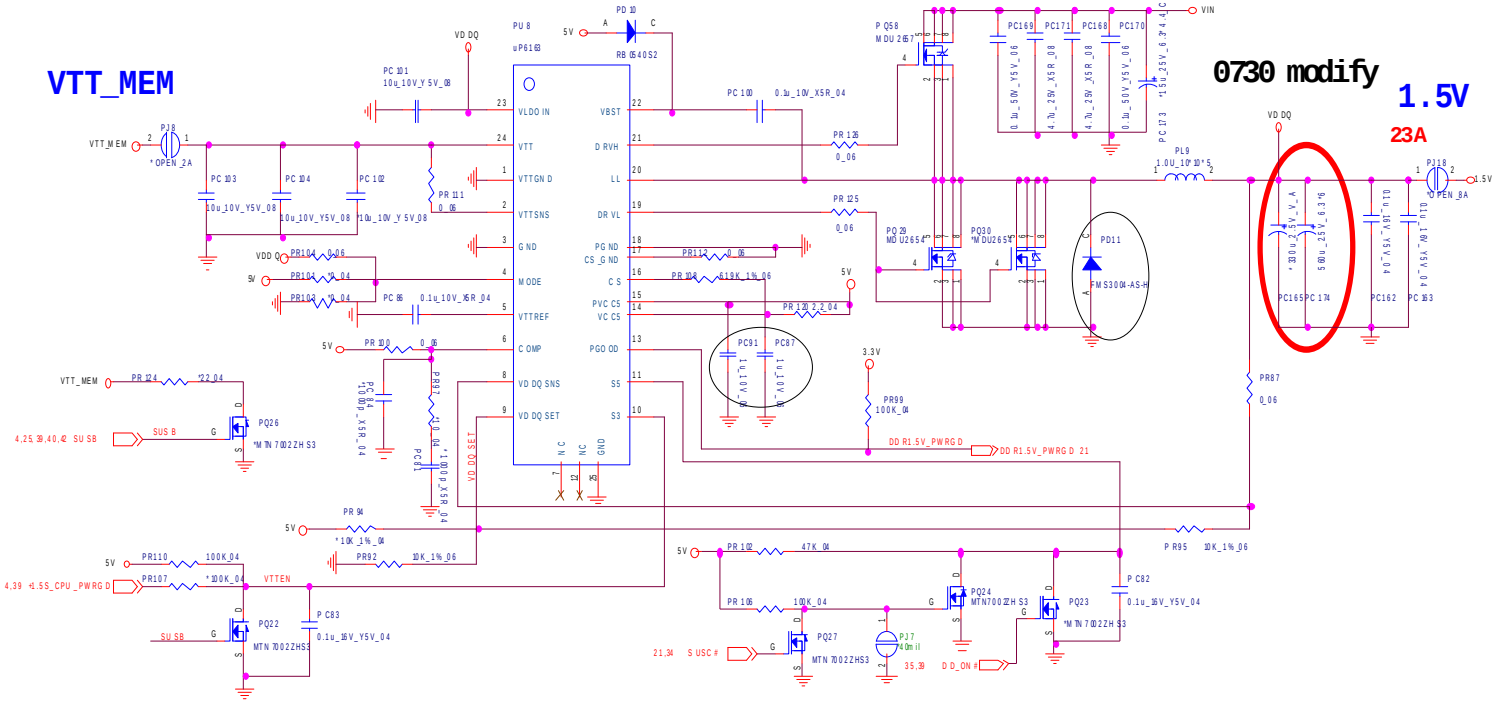

1.5V_CTRL1	1.5_CTRL0	Voltage
1	1	1.55V
1	0	1.60V
0	1	1.65V
0	0	1.70V

Power 1.8VS

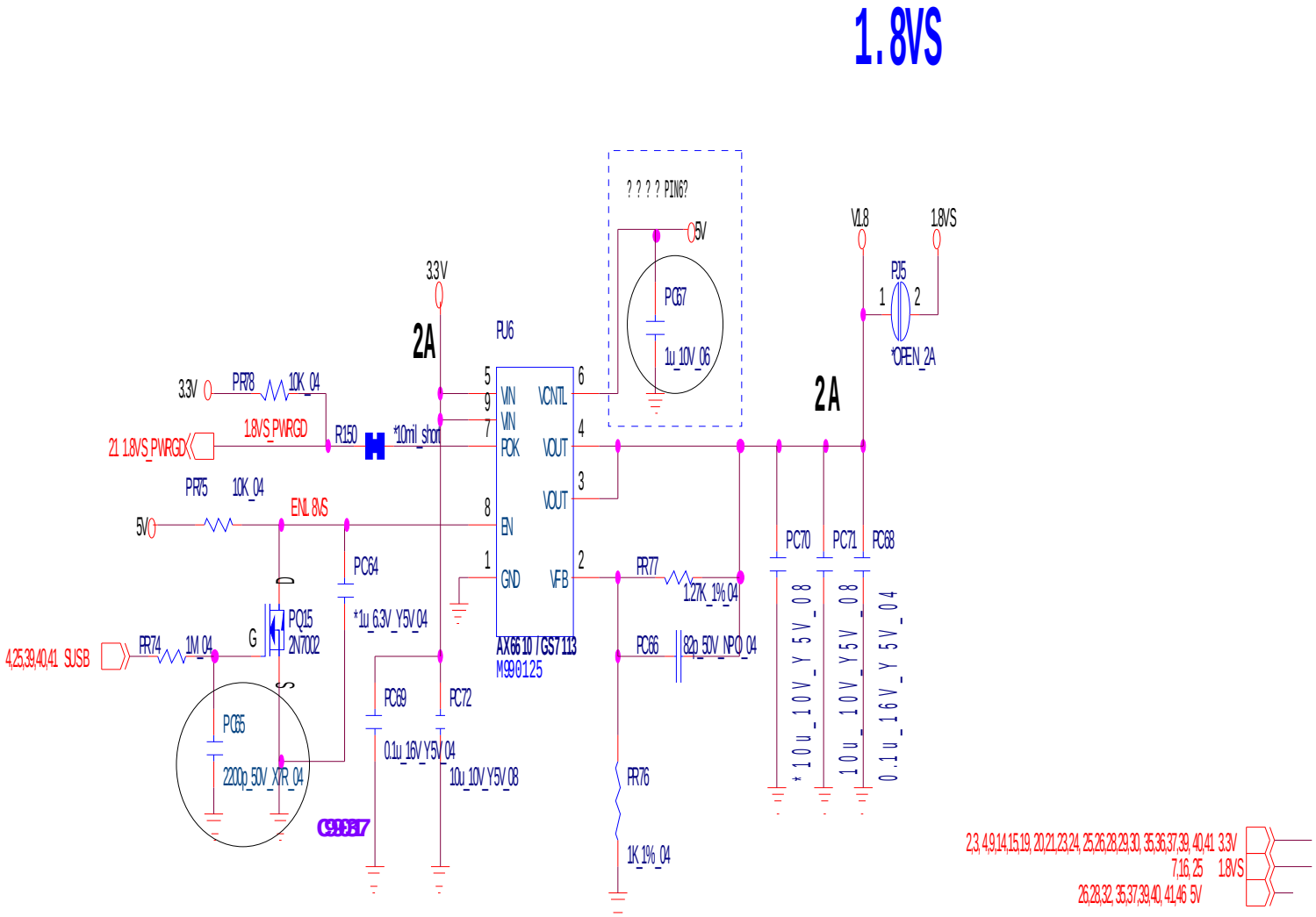

Sheet 42 of 57
Power 1.8VS

B.Schematic Diagrams

Power V-Core 1

Sheet 43 of 57
Power V-Core 1

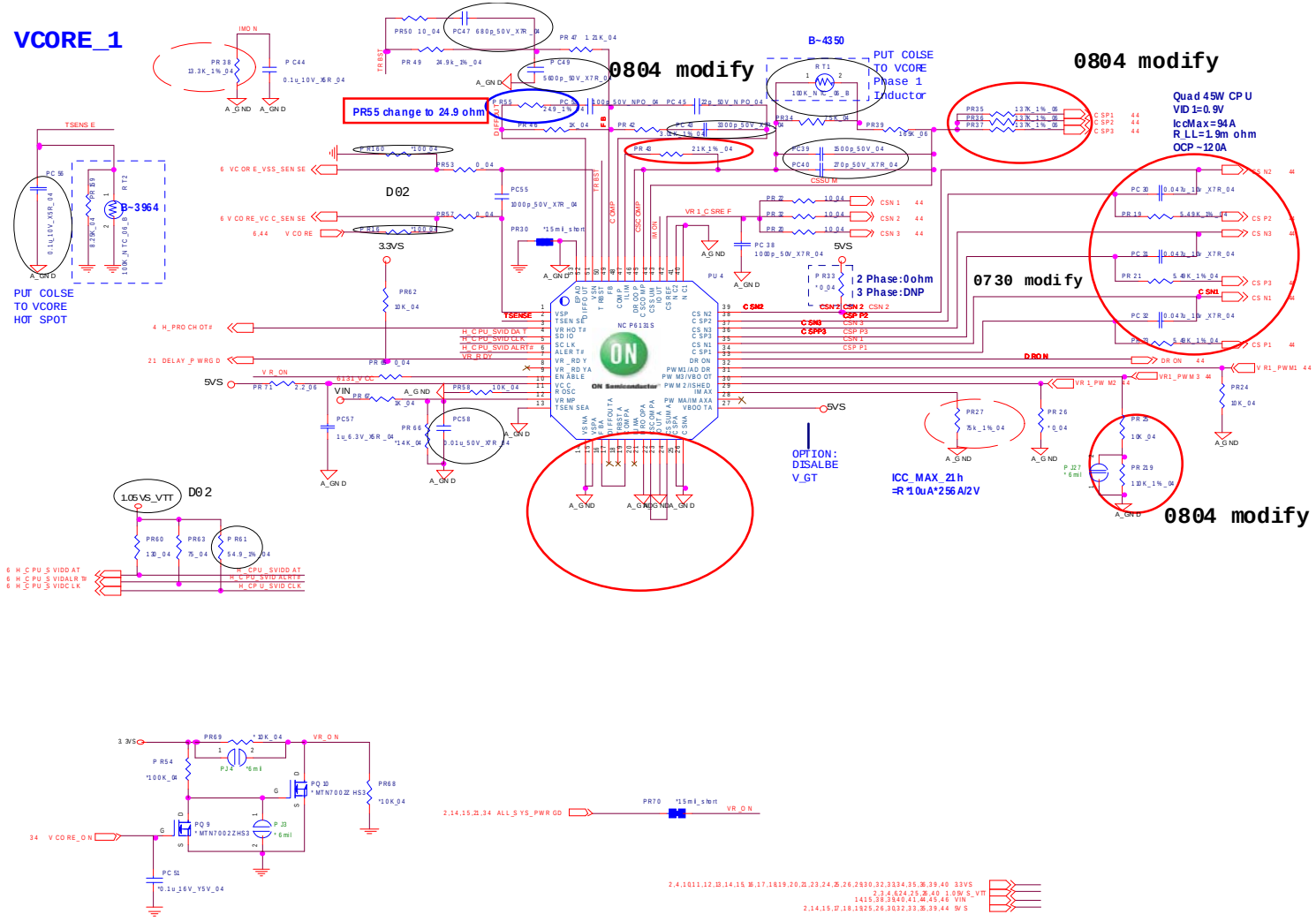

Power V-Core 2

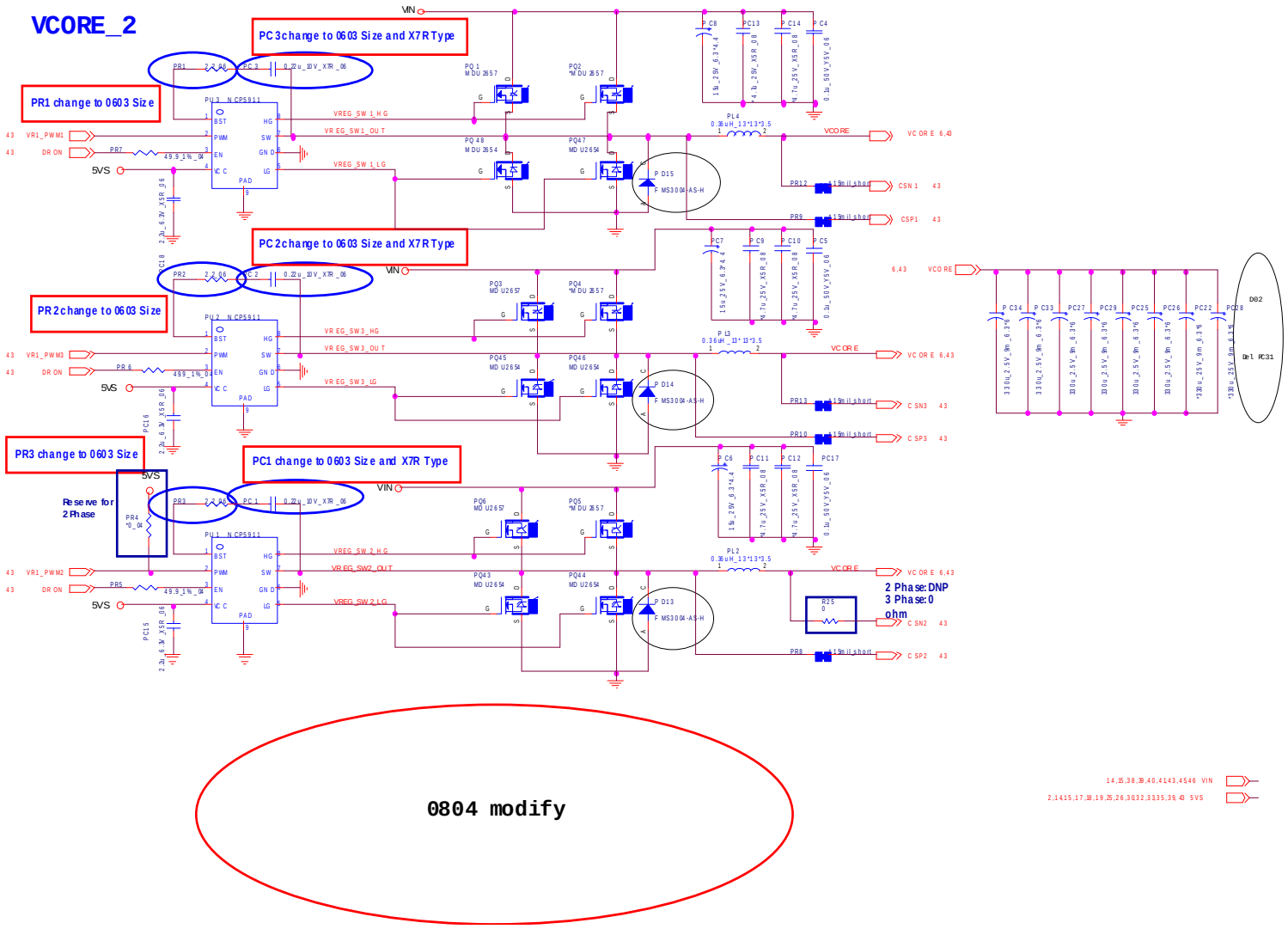

Sheet 44 of 57
Power V-Core 2

AC_In, Charger

Sheet 45 of 57
AC_In, Charger

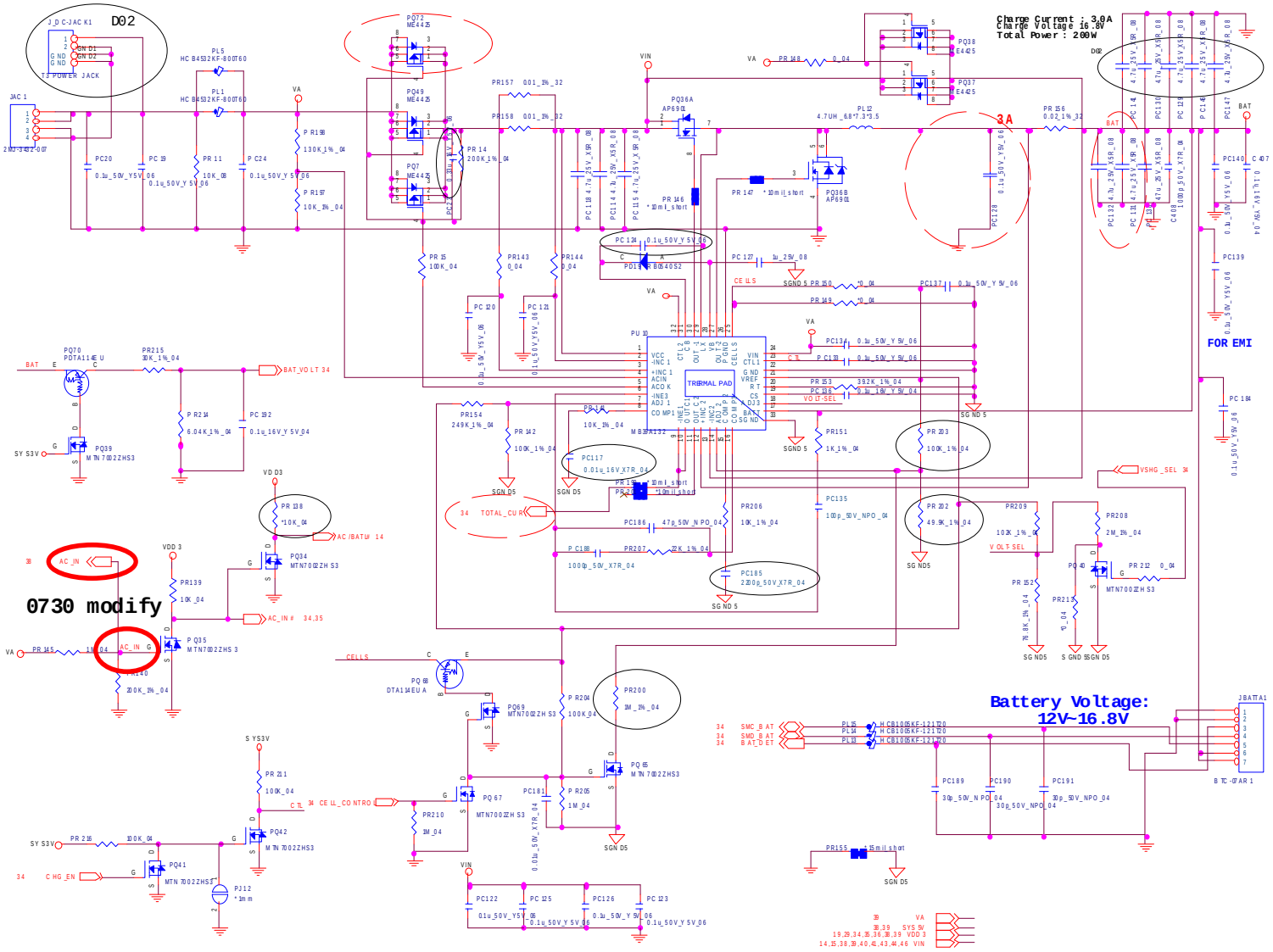

Power 0.85VS

	0.9V	0.8V	0.7V	0.6V
VCCSA_VID0	0	1	0	1
VCCSA_VID1	0	0	1	1

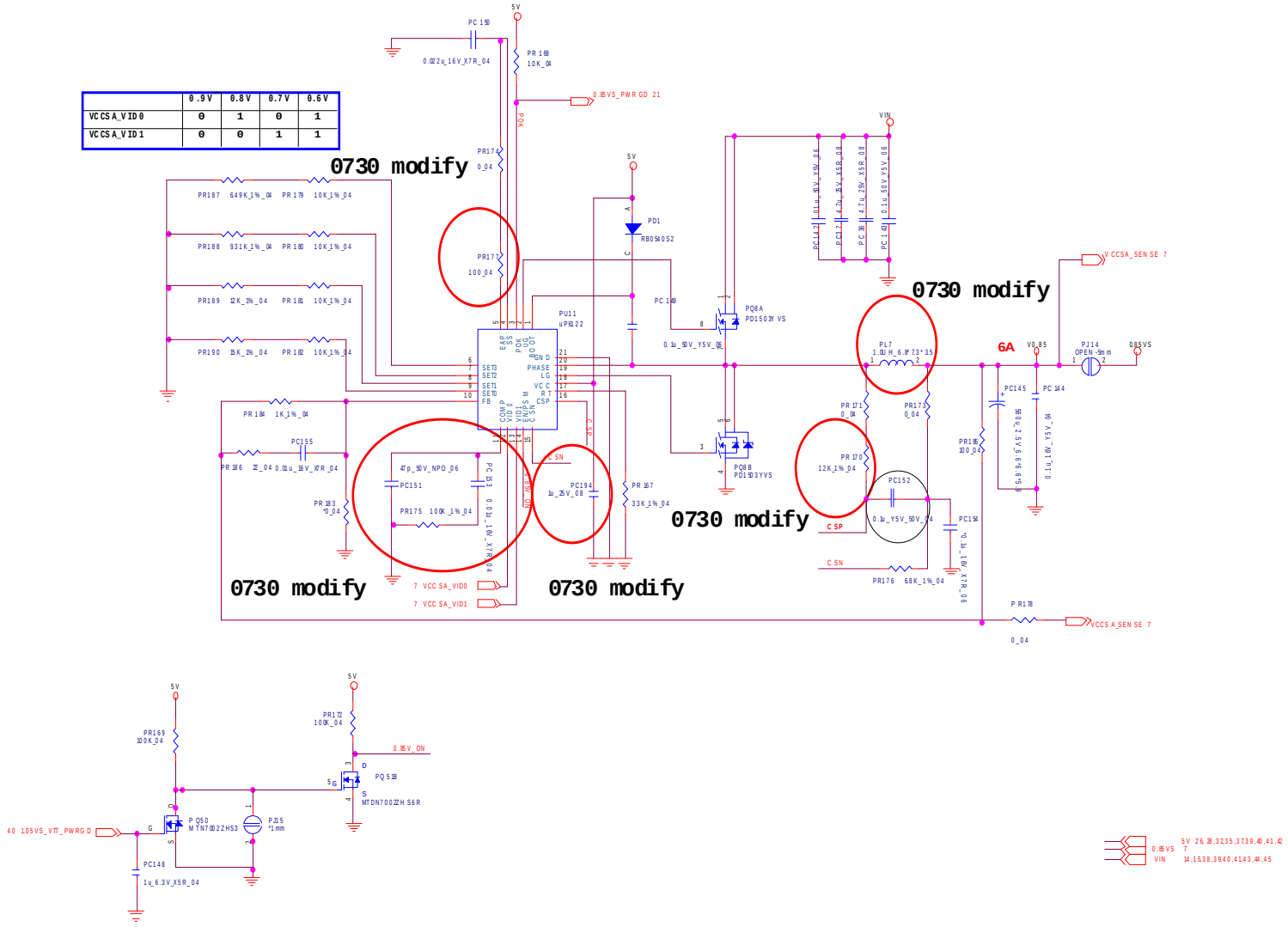

Sheet 46 of 57
Power 0.85VS

Audio Jack

Sheet 47 of 57
Audio Jack

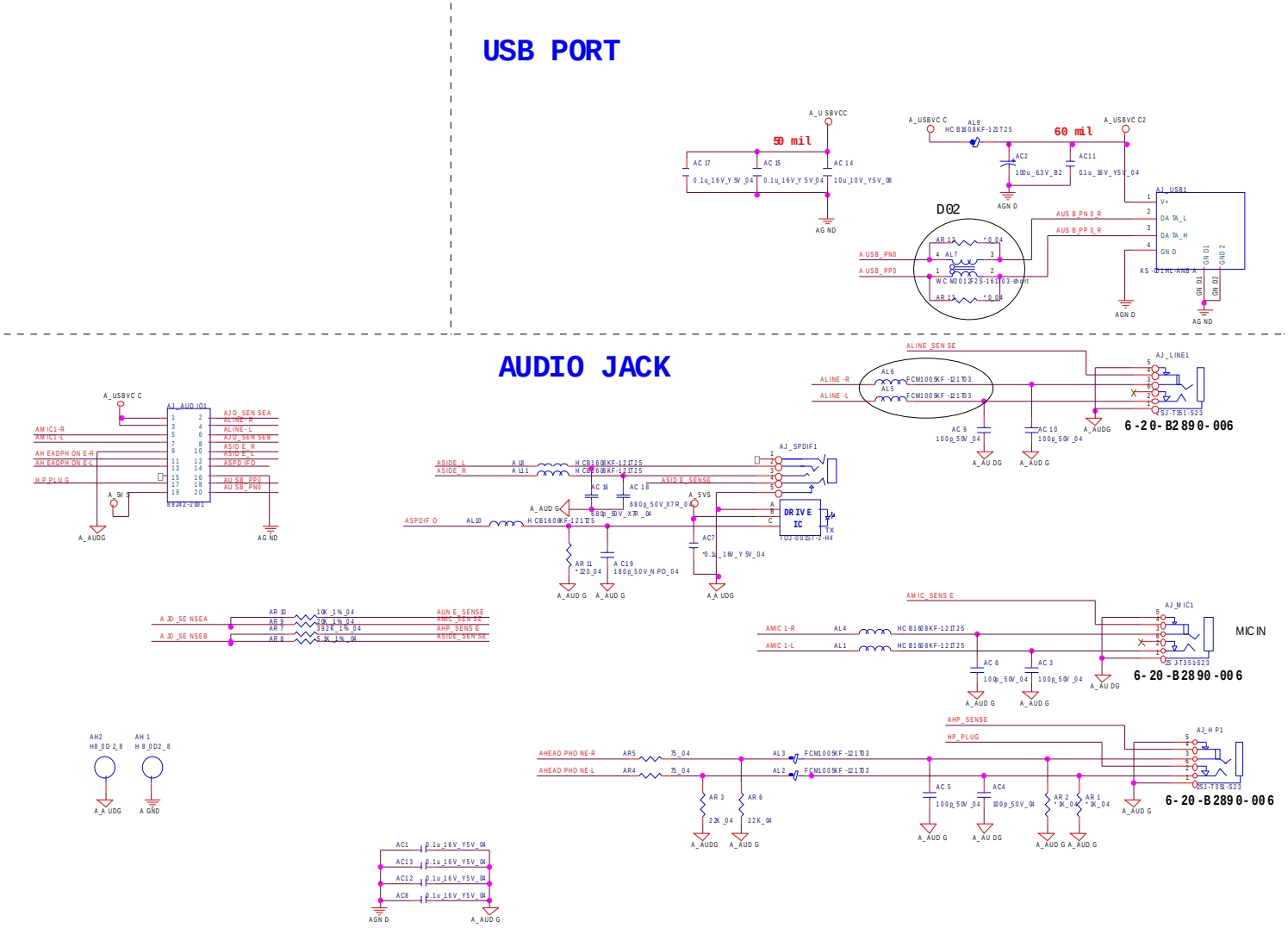

X5100 ODD Board

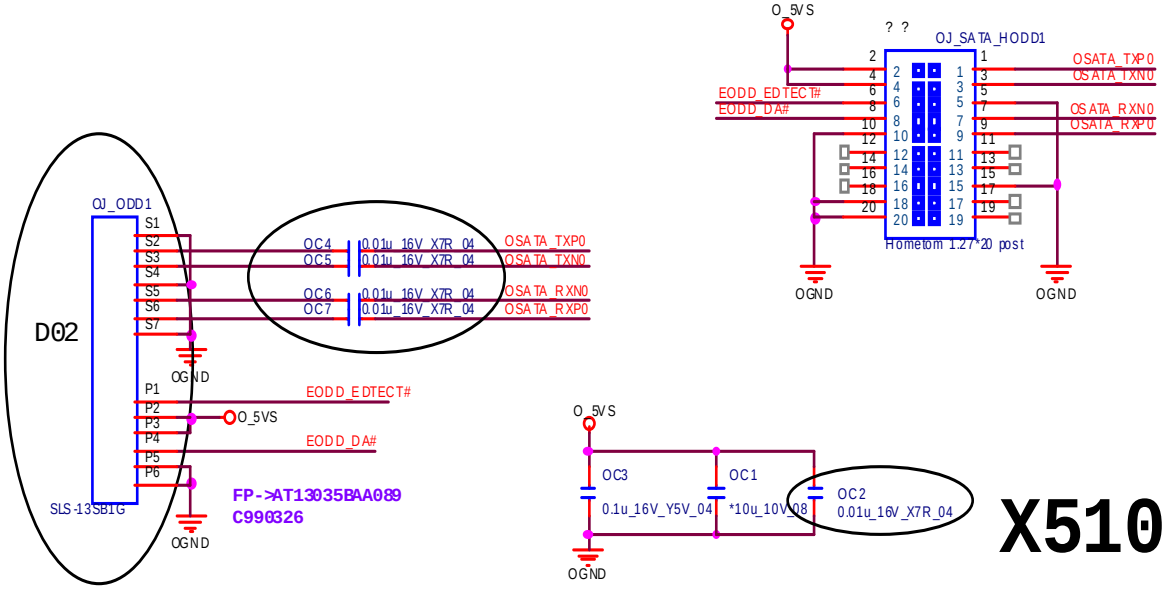

X5100M ONLY

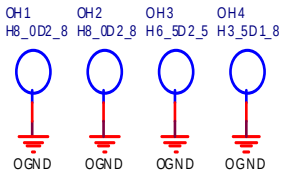

Sheet 48 of 57
X5100 ODD Board

X5100 Click Board

Sheet 49 of 57
X5100 Click Board

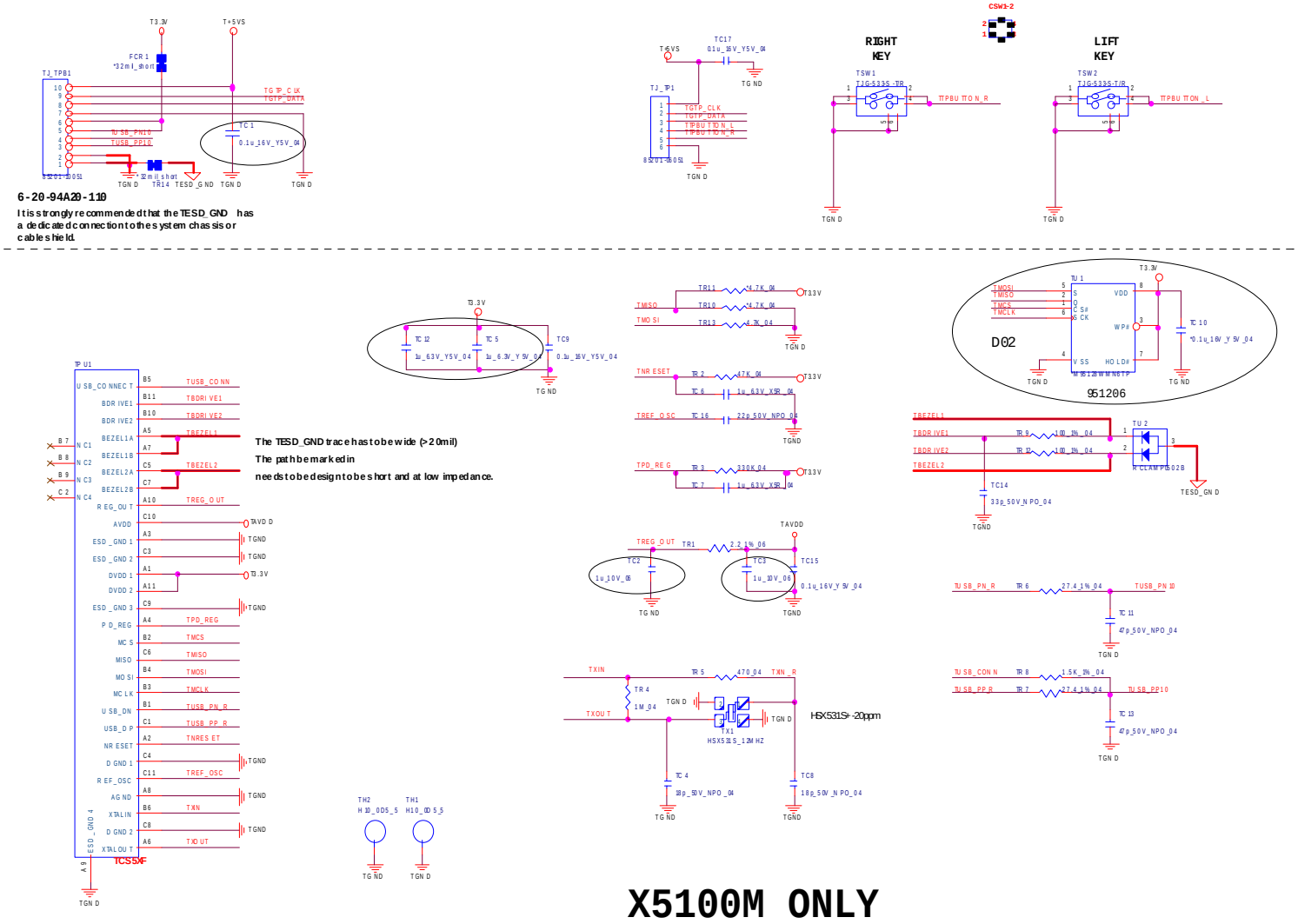

X5100 LED 1 Board

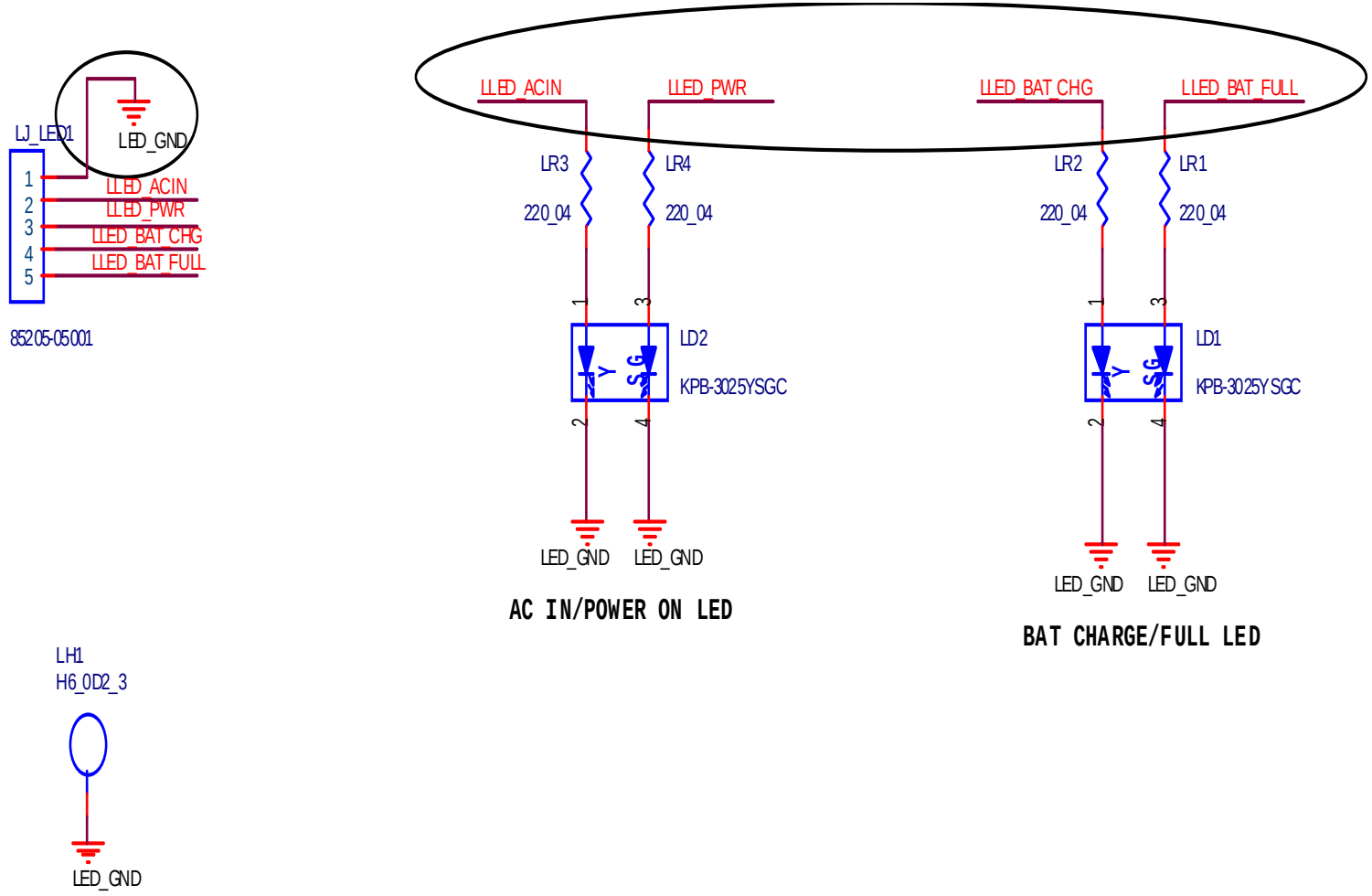

Sheet 50 of 57
X5100 LED 1 Board

X5100 LED 2 Board

Sheet 51 of 57
X5100 LED 2 Board

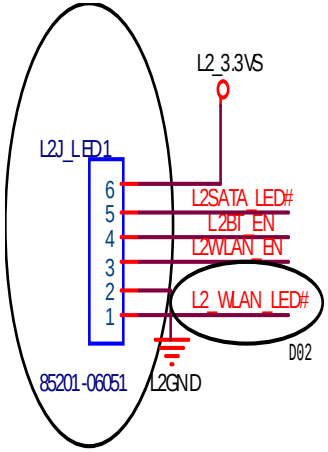

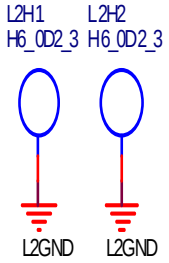

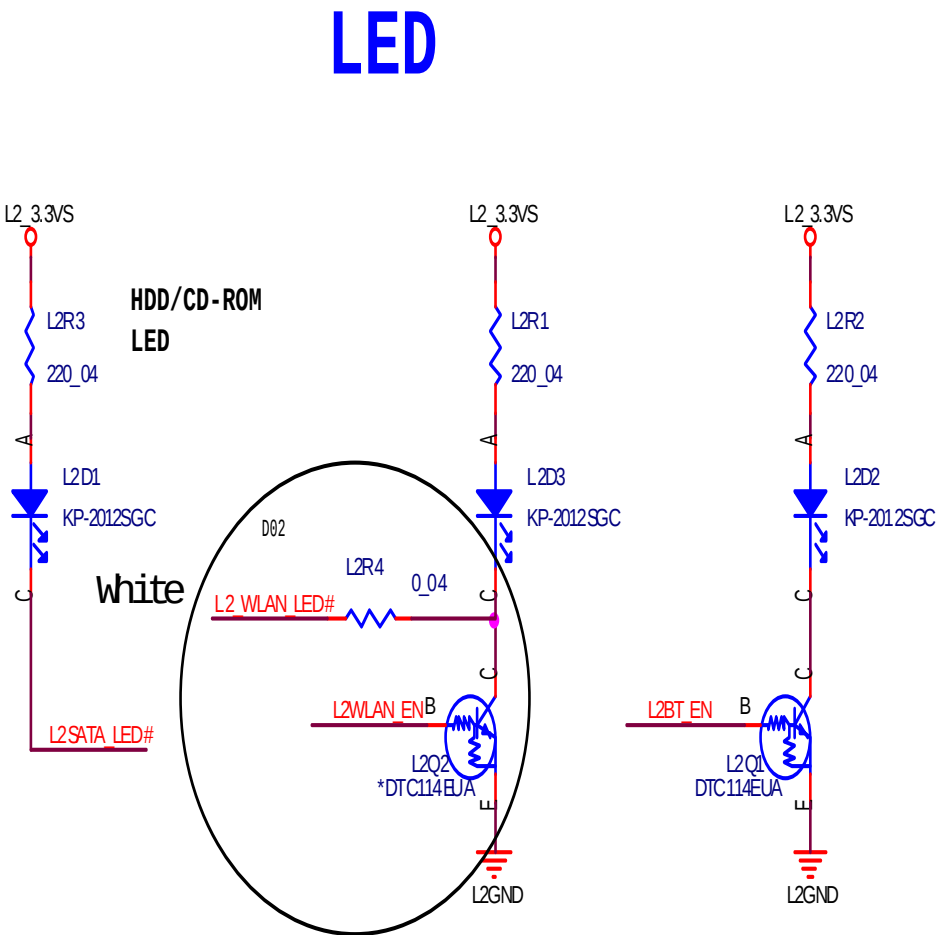

X5100 LED 3 Board

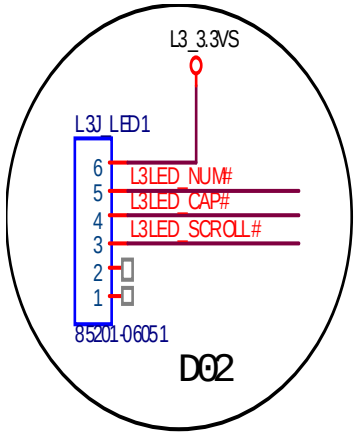

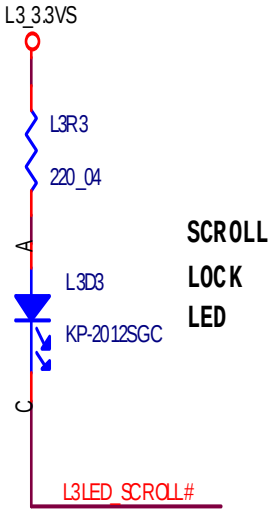

SCROLL LOCK LED

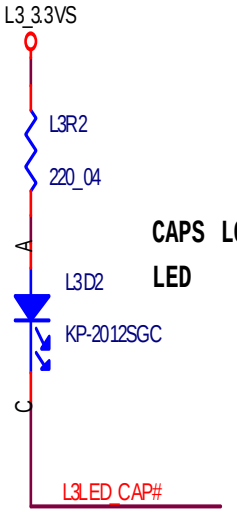

CAPS LOCK LED

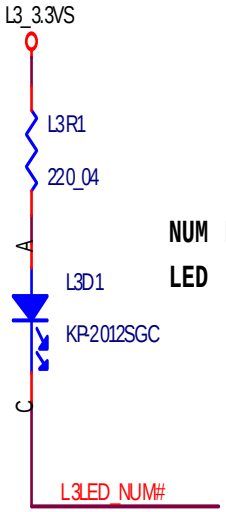

NUM LOCK LED

Sheet 52 of 57
X5100 LED 3 Board

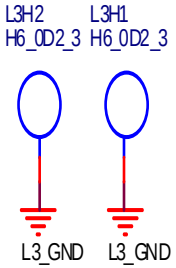

X7100 HDD & ODD Board

Sheet 53 of 57
X7100 HDD& ODD Board

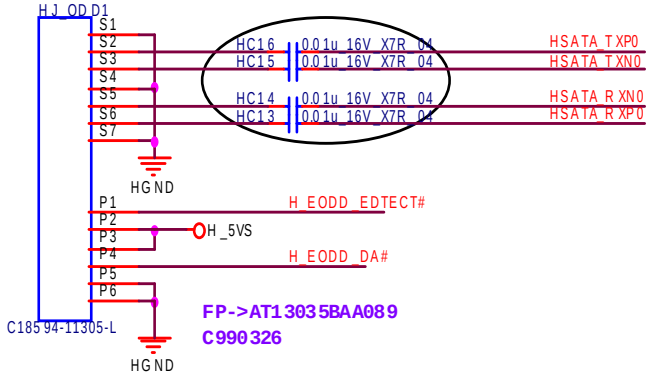

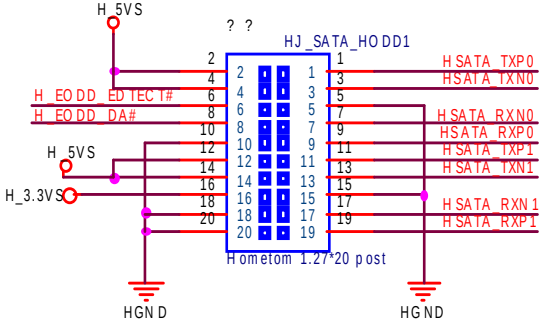

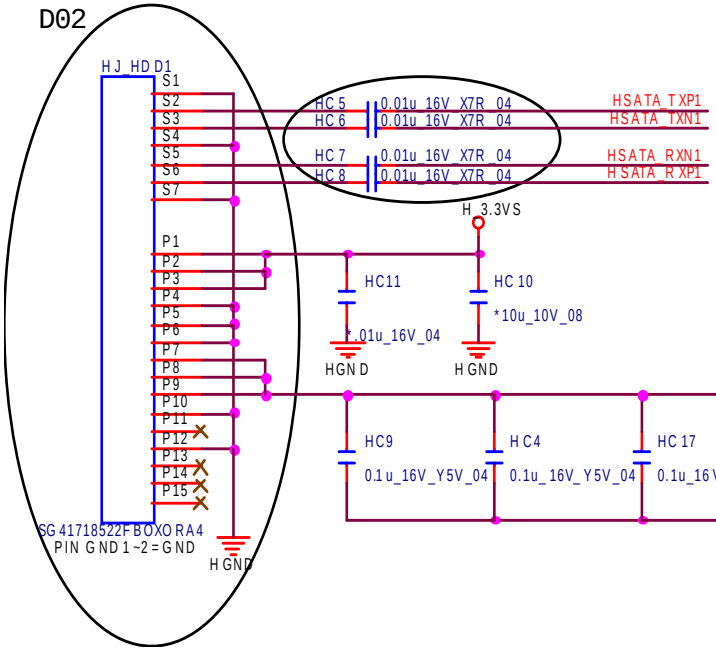

X7100M ONLY

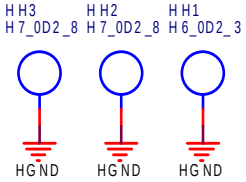

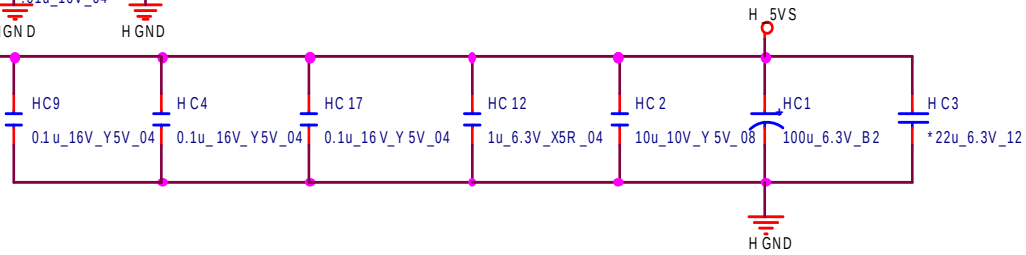

X7100 CIR

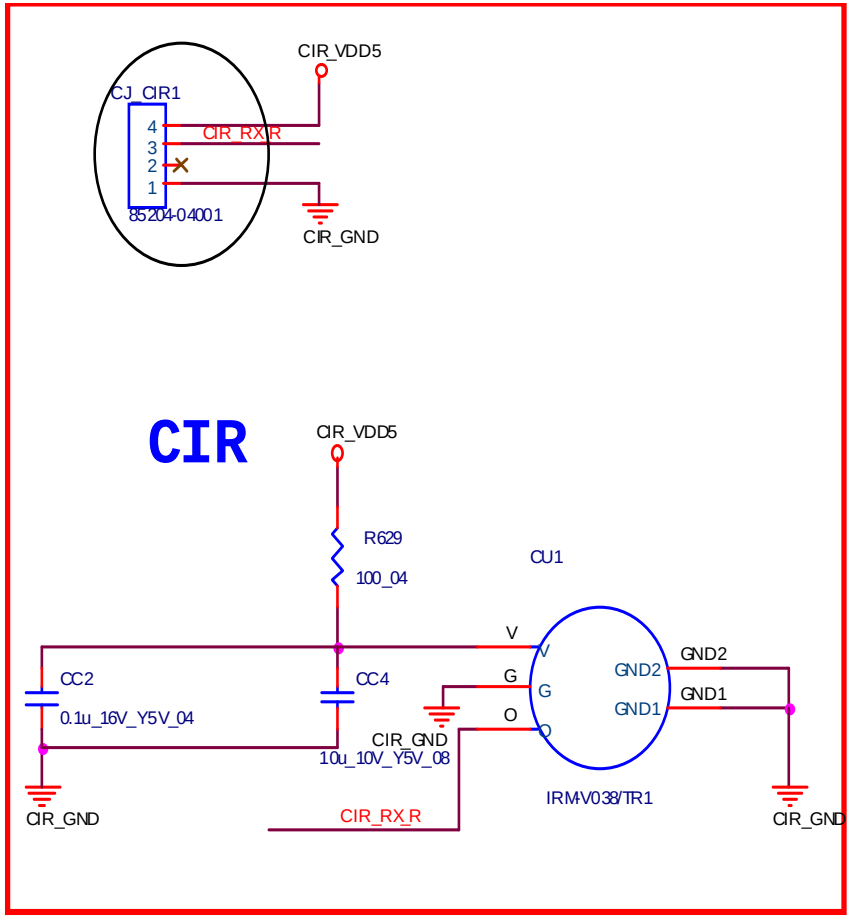

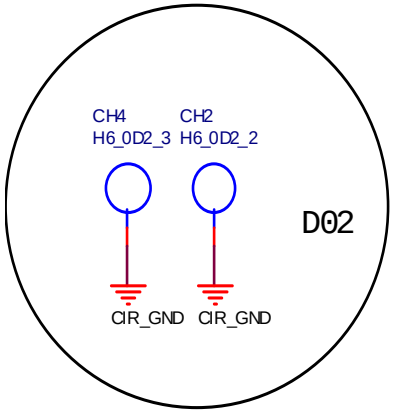

Sheet 54 of 57
X7100 CIR

X7100 LED Board

Sheet 55 of 57
X7100 LED Board

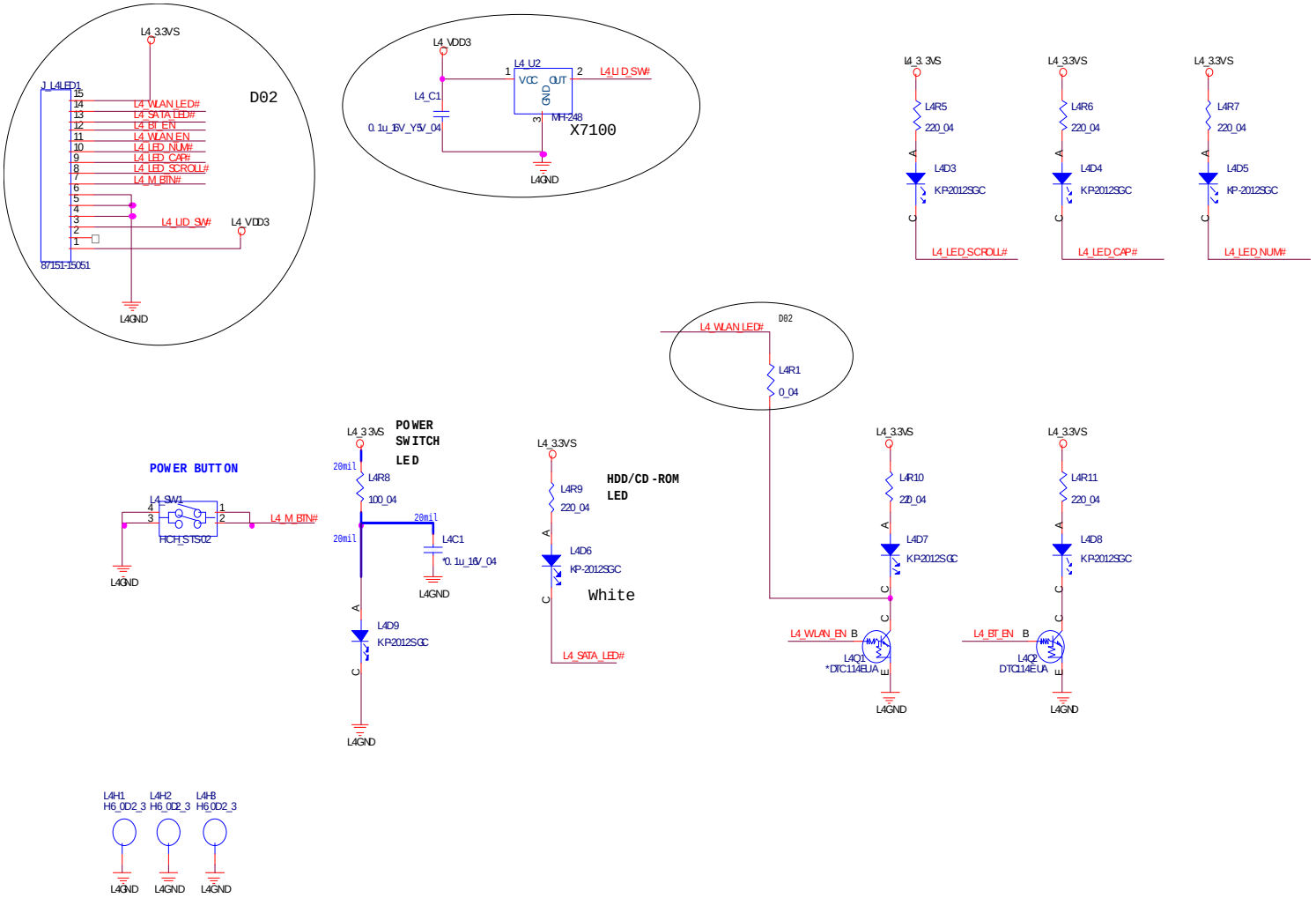

X7100 Click Board

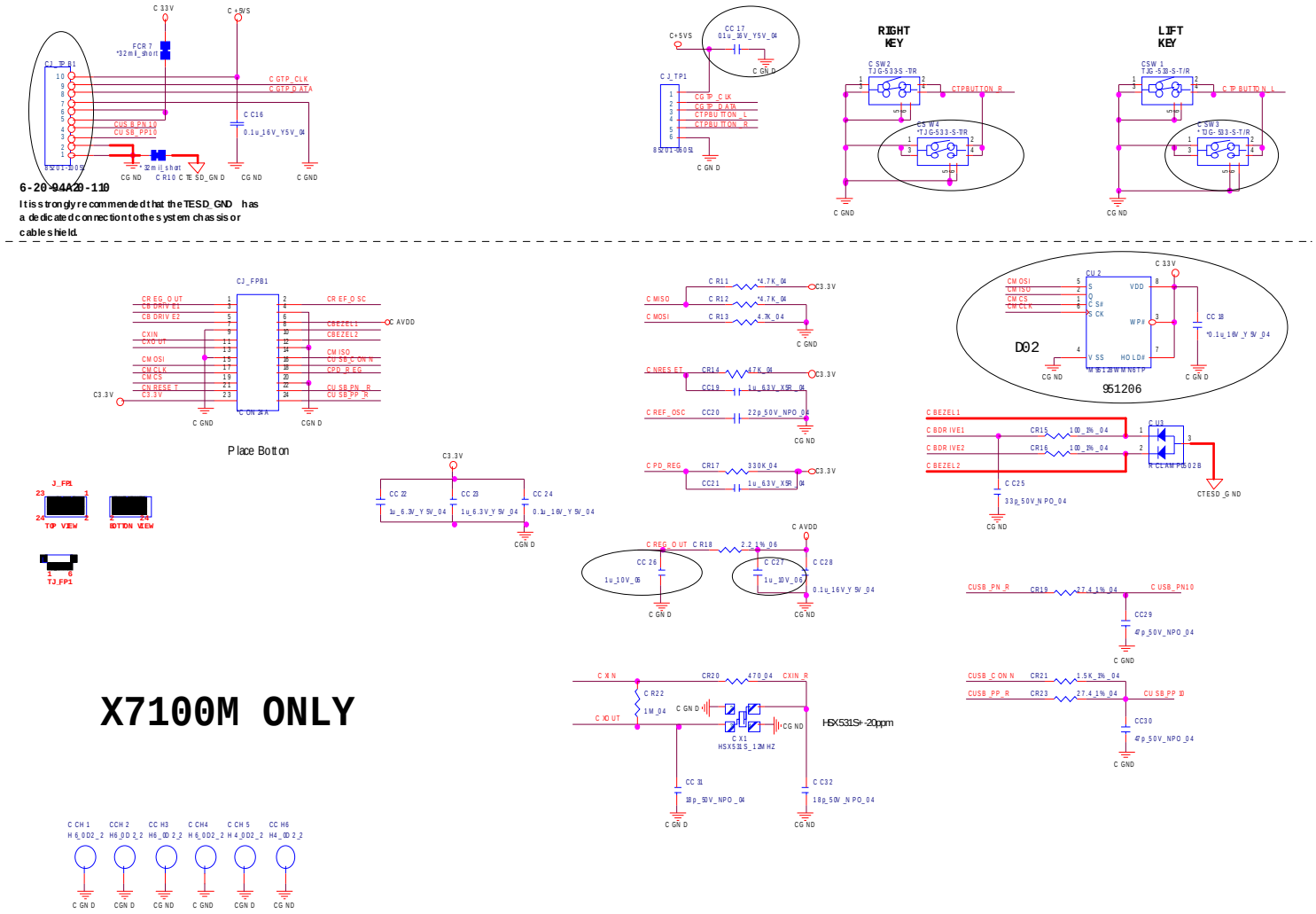

Sheet 56 of 57
X7100 Click Board

X7100 Fingerprint Board

Sheet 57 of 57
X7100 Fingerprint Board

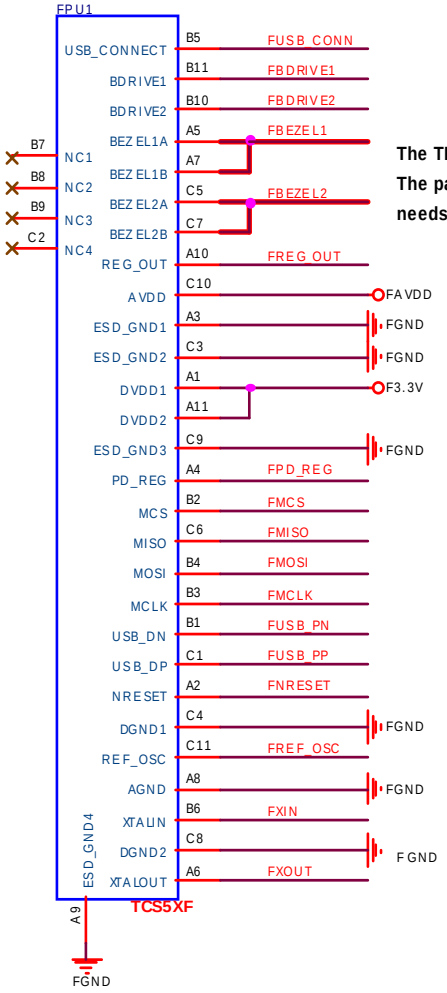

The TESD_GND trace has to be wide (>20mil)
The path be marked in RED
needs to be design to be short and at low impedance.

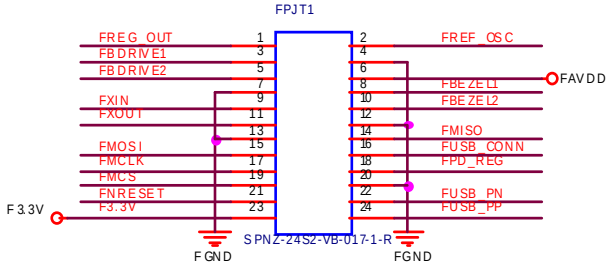

6-21-41710-212

X7100M ONLY

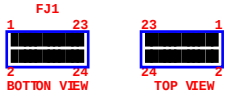

Appendix C:Updating the FLASH ROM BIOS

To update the FLASH ROM BIOS you must:

- Download the BIOS update from the web site.
- Unzip the files onto a bootable CD/DVD/USB Flash Drive.
- Reboot your computer from an external CD/DVD/USB Flash Drive.
- Use the flash tools to update the flash BIOS using the commands indicated below.
- Restart the computer booting from the HDD and press **F2** at startup enter the BIOS.
- Load setup defaults from the BIOS and save the default settings and exit the BIOS to restart the computer.
- After rebooting the computer you may restart the computer again and make any required changes to the default BIOS settings.

Download the BIOS

1. Go to **www.clevo.com.tw** and point to **E-Services** and click **E-Channel**.
2. Use your user ID and password to access the appropriate download area (BIOS), and download the latest BIOS files (the BIOS file will be contained in a batch file that may be run directly once unzipped) for your computer model (**see sidebar for important information on BIOS versions**).

Unzip the downloaded files to a bootable CD/DVD/ or USB Flash drive

1. Insert a bootable CD/DVD/USB flash drive into the CD/DVD drive/USB port of the computer containing the downloaded files.
2. Use a tool such as Winzip or Winrar to unzip all the BIOS files and refresh tools to your bootable CD/DVD/USB flash drive (you may need to create a bootable CD/DVD with the files using a 3rd party software).

Set the computer to boot from the external drive

1. With the bootable CD/DVD/USB flash drive containing the BIOS files in your CD/DVD drive/USB port, restart the computer and press **F2** (in most cases) to enter the BIOS.
2. Use the arrow keys to highlight the **Boot** menu.
3. Use the "+" and "-" keys to move boot devices up and down the priority order.
4. Make sure that the CD/DVD drive/USB flash drive is set first in the boot priority of the BIOS.
5. Press **F10** to save any changes you have made and exit the BIOS to restart the computer.

BIOS Version

Make sure you download the latest correct version of the BIOS appropriate for the computer model you are working on.

You should only download BIOS versions that are V1.01.XX or higher as appropriate for your computer model.

Note that BIOS versions are not backward compatible and therefore **you may not downgrade your BIOS to an older version** after upgrading to a later version (e.g if you upgrade a BIOS to ver 1.01.05, you **MAY NOT** then go back and flash the BIOS to ver 1.01.04).

Use the flash tools to update the BIOS

1. Make sure you are not loading any memory management programs such as HIMEM by holding the **F8** key as you see the message "**Starting MS-DOS**". You will then be prompted to give "**Y**" or "**N**" responses to the programs being loaded by DOS. Choose "N" for any memory management programs.
2. You should now be at the DOS prompt e.g: DISK **C**:\> (C is the designated drive letter for the CD/DVD drive/USB flash drive).
3. **Type the following command** at the DOS prompt:

   C:\> Flash.bat

4. The utility will then proceed to flash the BIOS.
5. You should then be prompted to press any key to restart the system or turn the power off, and then on again but make sure you remove the CD/DVD/USB flash drive from the CD/DVD drive/USB port before the computer restarts.

Restart the computer (booting from the HDD)

1. With the CD/DVD/USB flash drive removed from the CD/DVD drive/USB port the computer should restart from the HDD.
2. Press **F2** as the computer restarts to enter the BIOS.
3. Use the arrow keys to highlight the **Exit** menu.
4. Select **Load Setup Defaults** (or press **F9**) and select "**Yes**" to confirm the selection.
5. Press **F10** to save any changes you have made and exit the BIOS to restart the computer.

Your computer is now running normally with the updated BIOS

You may now enter the BIOS and make any changes you require to the default settings.