SERVICE MANUAL

P180HM

notebook

Notebook Computer

P180HM

Service Manual

Notice

The company reserves the right to revise this publication or to change its contents without notice. Information contained herein is for reference only and does not constitute a commitment on the part of the manufacturer or any subsequent vendor. They assume no responsibility or liability for any errors or inaccuracies that may appear in this publication nor are they in anyway responsible for any loss or damage resulting from the use (or misuse) of this publication.

This publication and any accompanying software may not, in whole or in part, be reproduced, translated, transmitted or reduced to any machine readable form without prior consent from the vendor, manufacturer or creators of this publication, except for copies kept by the user for backup purposes.

Brand and product names mentioned in this publication may or may not be copyrights and/or registered trademarks of their respective companies. They are mentioned for identification purposes only and are not intended as an endorsement of that product or its manufacturer.

Version 1.0
September 2011

Trademarks

Intel and **Intel Core** are trademarks of Intel Corporation.
Windows® is a registered trademark of Microsoft Corporation.
Other brand and product names are trademarks and/or registered trademarks of their respective companies.

About this Manual

This manual is intended for service personnel who have completed sufficient training to undertake the maintenance and inspection of personal computers.

It is organized to allow you to look up basic information for servicing and/or upgrading components of the ***P180HM*** series notebook PC.

The following information is included:

Chapter 1, Introduction, provides general information about the location of system elements and their specifications.
Chapter 2, Disassembly, provides step-by-step instructions for disassembling parts and subsystems and how to upgrade elements of the system.

Appendix A, Part Lists
Appendix B, Schematic Diagrams

IMPORTANT SAFETY INSTRUCTIONS

Follow basic safety precautions, including those listed below, to reduce the risk of fire, electric shock and injury to persons when using any electrical equipment:

1. Do not use this product near water, for example near a bath tub, wash bowl, kitchen sink or laundry tub, in a wet basement or near a swimming pool.
2. Avoid using a telephone (other than a cordless type) during an electrical storm. There may be a remote risk of electrical shock from lightning.
3. Do not use the telephone to report a gas leak in the vicinity of the leak.
4. Use only the power cord and batteries indicated in this manual. Do not dispose of batteries in a fire. They may explode. Check with local codes for possible special disposal instructions.
5. This product is intended to be supplied by a Listed Power Unit (Full Range AC/DC Adapter – AC Input 100 - 240V, 50 - 60Hz, DC Output 19V, 11.57A).

This Computer's Optical Device is a Laser Class 1 Product

Instructions for Care and Operation

The notebook computer is quite rugged, but it can be damaged. To prevent this, follow these suggestions:

1. **Don't drop it, or expose it to shock.** If the computer falls, the case and the components could be damaged.

Do not expose the computer to any shock or vibration.	*Do not place it on an unstable surface.*	*Do not place anything heavy on the computer.*

2. **Keep it dry, and don't overheat it.** Keep the computer and power supply away from any kind of heating element. This is an electrical appliance. If water or any other liquid gets into it, the computer could be badly damaged.

Do not expose it to excessive heat or direct sunlight.	*Do not leave it in a place where foreign matter or moisture may affect the system.*	*Don't use or store the computer in a humid environment.*	*Do not place the computer on any surface which will block the vents.*

3. **Follow the proper working procedures for the computer**. Shut the computer down properly and don't forget to save your work. Remember to periodically save your data as data may be lost if the battery is depleted.

Do not turn off the power until you properly shut down all programs.	*Do not turn off any peripheral devices when the computer is on.*	*Do not disassemble the computer by yourself.*	*Perform routine maintenance on your computer.*

4. **Avoid interference.** Keep the computer away from high capacity transformers, electric motors, and other strong magnetic fields. These can hinder proper performance and damage your data.
5. **Take care when using peripheral devices**.

Use only approved brands of peripherals.	*Unplug the power cord before attaching peripheral devices.*

Power Safety

The computer has specific power requirements:

- Only use a power adapter approved for use with this computer.
- Your AC adapter may be designed for international travel but it still requires a steady, uninterrupted power supply. If you are unsure of your local power specifications, consult your service representative or local power company.
- The power adapter may have either a 2-prong or a 3-prong grounded plug. The third prong is an important safety feature; do not defeat its purpose. If you do not have access to a compatible outlet, have a qualified electrician install one.
- When you want to unplug the power cord, be sure to disconnect it by the plug head, not by its wire.
- Make sure the socket and any extension cord(s) you use can support the total current load of all the connected devices.
- Before cleaning the computer, make sure it is disconnected from any external power supplies.

Power Safety Warning

Before you undertake any upgrade procedures, make sure that you have turned off the power, and disconnected all peripherals and cables (including telephone lines). It is advisable to also remove your battery in order to prevent accidentally turning the machine on.

Do not plug in the power cord if you are wet.	*Do not use the power cord if it is broken.*	*Do not place heavy objects on the power cord.* 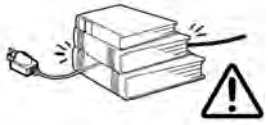

Battery Precautions

- Only use batteries designed for this computer. The wrong battery type may explode, leak or damage the computer.
- Do not continue to use a battery that has been dropped, or that appears damaged (e.g. bent or twisted) in any way. Even if the computer continues to work with a damaged battery in place, it may cause circuit damage, which may possibly result in fire.
- Recharge the batteries using the notebook's system. Incorrect recharging may make the battery explode.
- Do not try to repair a battery pack. Refer any battery pack repair or replacement to your service representative or qualified service personnel.
- Keep children away from, and promptly dispose of a damaged battery. Always dispose of batteries carefully. Batteries may explode or leak if exposed to fire, or improperly handled or discarded.
- Keep the battery away from metal appliances.
- Affix tape to the battery contacts before disposing of the battery.
- Do not touch the battery contacts with your hands or metal objects.

Battery Guidelines

The following can also apply to any backup batteries you may have.

- If you do not use the battery for an extended period, then remove the battery from the computer for storage.
- Before removing the battery for storage charge it to 60% - 70%.
- Check stored batteries at least every 3 months and charge them to 60% - 70%.

Battery Disposal

The product that you have purchased contains a rechargeable battery. The battery is recyclable. At the end of its useful life, under various state and local laws, it may be illegal to dispose of this battery into the municipal waste stream. Check with your local solid waste officials for details in your area for recycling options or proper disposal.

Caution

Danger of explosion if battery is incorrectly replaced. Replace only with the same or equivalent type recommended by the manufacturer. Discard used battery according to the manufacturer's instructions.

Battery Level

Click the battery icon in the taskbar to see the current battery level and charge status. A battery that drops below a level of 10% will not allow the computer to boot up. Make sure that any battery that drops below 10% is recharged within one week.

Related Documents

You may also need to consult the following manual for additional information:

User's Manual on CD
This describes the notebook PC's features and the procedures for operating the computer and its ROM-based setup program. It also describes the installation and operation of the utility programs provided with the notebook PC.

Contents

Introduction 1-1

Overview 1-1
System Specifications 1-2
External Locator - Top View with LCD Panel Open 1-4
External Locator - Front & Right side Views 1-5
External Locator - Left Side & Rear View 1-6
External Locator - Bottom View 1-7
Mainboard Overview - Top (Key Parts) 1-8
Mainboard Overview - Bottom (Key Parts) 1-9
Mainboard Overview - Top (Connectors) 1-10
Mainboard Overview - Bottom (Connectors) 1-11

Disassembly 2-1

Overview 2-1
Maintenance Tools 2-2
Connections 2-2
Maintenance Precautions 2-3
Disassembly Steps 2-4
Removing the Battery 2-5
Removing the Optical (CD/DVD) Device 2-6
Removing the Hard Disk Drive 2-7
Removing the Keyboard 2-10
Removing the System Memory (RAM) -1 2-12
Removing the System Memory (RAM) - 2 2-14
Removing and Installing the Processor 2-15
Removing the VGA Card 2-18
Installing the VGA Card 2-19
Removing the Wireless LAN Module 2-20

Part Lists A-1

Part List Illustration Location A-2
Top with Fingerprint A-3
Top without Fingerprint A-4
Bottom A-5
LCD A-6
Mainboard A-7
DVD A-8
COMBO A-9

Schematic Diagrams.....B-1

System Block Diagram B-2
Sandy Bridge 1/7 DMI, PEG B-3
Sandy Bridge 2/7 CLK, MISC B-4
Sandy Bridge 3/7 DDR3I B-5
Sandy Bridge 4/7 Power B-6
Sandy Bridge 5/7 GFX PWR B-7
Sandy Bridge 6/7 .....B-8
Sandy Bridge 7/7 RSVD B-9
DDR3 CHA SO-DIMM 0 .....B-10
DDR3 CHA SO-DIMM 1 .....B-11
DDR3 CHB SO-DIMM 0 .....B-12
DDR3 CHB SO-DIMM 1 .....B-13
MXM 3.0 MASTER B-14
MXM 3.0 SLAVE B-15
CPT 1/9 HDA, SATA B-16
CPT 2/9 PCIE, SMBUS B-17
CPT 3/9 DMI, PWRGD B-18
CPT 4/9 LVDS, DDI, 9/9 GND B-19
CPT 5/9 PCI, USB B-20
CPT 6/9 GPIO, CPU B-21
CPT 7/9 PWR B-22
CPT 8/9 PWR B-23

SATA HDD CONN, Re- Driver B-24
CPT, DVI B-25
LED PANEL B-26
FAN CONTROL B-27
HDMI, RJ45 CONN B-28
ODD, CCD, USB 2.0, BT, TPM B-29
CODEC, DMIC B-30
AUDIO AMP, SPK B-31
WLAN, TV, Charger USB B-32
LAN, Card Reader B-33
IEEE 1394 ..... B-34
USB 3.0 ..... B-35
KBC ITE IT8519-BX B-36
SMALL BOARD CONN-A B-37
SMALL BOARD CONN-B B-38
POWER SYSTEM B-39
PWR VCORE-1 ..... B-40
PWR VCORE-2 ..... B-41
PWR 1.05VS/ 1.05VS CPU B-42
PWR 0.85VS B-43
PWR 1.5V/ VTT MEM B-44
PWR 1.8VS/ 1.5VS/ 1.5VS CPU B-45
PWR VDD3/ VDD5 ..... B-46
PWR CHARGER, DC IN B-47
SCREW HOLE B-48
EXPRESS CARD BOARD B-49
ISDB-T CARD/ TV CARD B-50
AUDIO BOARD B-51
POWER BUTTON BOARD B-52
CLICK & FP BOARD B-53
GAME KEY BOARD B-54
CIR BOARD B-55
FINGER BOARD B-56
POWER ON SEQUENCE B-57

Chapter 1: Introduction

Overview

This manual covers the information you need to service or upgrade the ***P180HM*** series notebook computer. Information about operating the computer (e.g. getting started, and the *Setup* utility) is in the *User's Manual*. Information about drivers (e.g. VGA & audio) is also found in *User's Manual*. That manual is shipped with the computer.

Operating systems (e.g. *Windows 7*, etc.) have their own manuals as do application software (e.g. word processing and database programs). If you have questions about those programs, you should consult those manuals.

The ***P180HM*** series notebook is designed to be upgradeable. See ***Disassembly on page 2 - 1*** for a detailed description of the upgrade procedures for each specific component. Please note the warning and safety information indicated by the "🔔" symbol.

The balance of this chapter reviews the computer's technical specifications and features.

System Specifications

Processor

Intel® Core™ i7 Processor Extreme Edition i7-2920XM (2.50GHz)
8MB L3 Cache, 32nm, DDR3-1600MHz, TDP 55W
Intel® Core™ i7 Processor i7-2820QM (2.30GHz)
8MB L3 Cache, 32nm, DDR3-1600MHz, TDP 45W
i7-2720QM (2.20GHz) , i7-2630QM (2.0GHz)
6MB L3 Cache, 32nm, DDR3-1600MHz, TDP 45W

LCD

18.4" (46.74cm) FHD TFT LCD

Core Logic

Intel® HM67 Chipset

Memory

Three 204 Pin SO-DIMM Sockets Supporting **DDR3 1333/1600MHz** Memory

Memory Expandable up to 12GB

Note: 1600 MHz Memory Modules are only supported by Quad-Core CPUs to a maximum of two SO-DIMMs

Storage

Up to Three (**Factory Option**) Changeable 2.5" (6cm) 9.5mm (h) **SATA** (Serial) Hard Disk Drives supporting RAID level 0/1/5

Note 1st & 2nd HDDs are in SATA III Interface.

(**Factory Option**) One Changeable 12.7mm(h) Optical Device Type Drive (Super Multi Drive/ Blu-Ray Combo Drive/Blu-Ray Writer Drive)

BIOS

AMI BIOS (32Mb SPI Flash-ROM)

Video Adapter

nVIDIA® GeForce GTX 560M PCIe Video Card

1.5GB GDDR5 Video RAM on board

Microsoft DirectX® 11 Compatible

Supports nVIDIA® SLI Technology

Security

Security (Kensington® Type) Lock Slot

BIOS Password

(**Factory Option**) Fingerprint Reader Module

Keyboard

Full-size “WinKey” keyboard (with numeric keypad)

Communication

Built-In Giga Base-TX Ethernet LAN

2.0M Pixel USB PC Camera Module

(**Factory Option**) Bluetooth 2.1 + EDR (Enhanced Data Rate) Module

WLAN/ Bluetooth Half Mini-Card Modules:

(**Factory Option**) Intel® Centrino® Ultimate-N 6300 Wireless LAN (**802.11a/g/n**)

(**Factory Option**) Intel® Centrino® Advanced-N 6230 Wireless LAN (**802.11a/g/n**) + Bluetooth **3.0**

(**Factory Option**) Intel® Centrino® Wireless-N 1030 Wireless LAN (**802.11b/g/n**) + Bluetooth **3.0**

(**Factory Option**) Third-Party Wireless LAN (**802.11b/g/n**) + Bluetooth **3.0**

Pointing Device

Built-in TouchPad (scrolling key functionality integrated)

Card Reader

Embedded Multi-In-1 Card Reader
- MMC (MultiMedia Card) / RS MMC
- SD (Secure Digital) / Mini SD / SDHC/ SDXC
- MS (Memory Stick) / MS Pro / MS Duo

Interface

Four USB 2.0 Ports
(Note: One USB 2.0 port can supply power when the system is off but still powered by the AC/DC adapter, or powered by the battery with a capacity level above 20% - see ***page 11***.)

Two USB 3.0 Ports

One eSATA Port (USB 2.0 Port Combined)

One HDMI-Out Port

One DVI-Out Port

One S/PDIF Out Jack

One Headphone/Speaker-Out Jack

One Microphone-In Jack

One Line-In Jack

One Mini-IEEE1394a Port

One RJ-45 LAN Jack

One DC-In Jack

Note: External 7.1CH Audio Output Supported by Headphone, Microphone, Line-In and Sur-round-Out Jacks

Slots

One ExpressCard/54(34) Slot

One Mini Card Slot for **WLAN** Module or **WLAN and Bluetooth** Combo Module

Audio

High Definition Audio Compliant Interface

S/PDIF Digital Output

Five Speakers

One Sub Woofer

Built-In Microphone

THX TruStudio Pro

Environmental Spec

Temperature

Operating: 5°C - 35°C

Non-Operating: -20°C - 60°C

Relative Humidity

Operating: 20% - 80%

Non-Operating: 10% - 90%

Power

Full Range AC/DC Adapter

AC Input: 100 - 240V, 50 - 60Hz

DC Output: 19V, 11.57A (**220W**)

Removable 8-cell Smart Lithium-Ion Battery Pack, 89.21WH

Dimensions & Weight

439mm (w) * 299mm (d) * 44mm - 65mm (h)

Around 5.6kg with 89.21WH Battery and ODD

External Locator - Top View with LCD Panel Open

Figure 1
Top View

1. Optional Built-In PC Camera
2. LCD
3. Speakers
4. LED Status Indicators
5. Touch Sensor Instant Keys
6. 8 * Gaming Keys
7. Keyboard
8. TouchPad and Buttons
9. Fingerprint Reader Module (**optional**)
10. LED Power Indicators

External Locator - Front & Right side Views

Figure 2
Front Views

1. Speakers
2. LED Power Indicators

Figure 3
Right Side Views

1. ExpressCard/54(34) Slot
2. Headphone-In Jack
3. Microphone-In Jack
4. Line-In Jack
5. S/PDIF-Out Jack
6. Combined eSATA/ USB Port
7. USB 2.0 Port
8. Security Lock Slot
9. Power Button

External Locator - Left Side & Rear View

Figure 4
Left Side View

1. DVI-Out Port
2. Powered USB 2.0 Port
3. USB 2.0 Ports
4. RJ-45 LAN Jack
5. HDMI-Out Port
6. Multi-in-1 Card Reader
7. USB 3.0 Ports
8. Mini-IEEE 1394 Port
9. Optional Device Drive Bay

Figure 5
Rear View

1. Fan Outlet
2. DC-In Jack

External Locator - Bottom View

Figure 6
Bottom View

1. Sub Woofer
2. Fan Outlet/Intake
3. Component Bay Cover
4. Battery
5. HDD Bay

Overheating

To prevent your computer from overheating make sure nothing blocks the vent/fan intakes while the computer is in use.

Mainboard Overview - Top (Key Parts)

Figure 7
Mainboard Top Key Parts

1. KBC-IT8519BX
2. CMOS Battery
3. Mini-Card Connector (WLAN Module)
4. CougarPoint Controller
5. Memory Slots DDR3 So-DIMM
6. Audio Codec ALC892

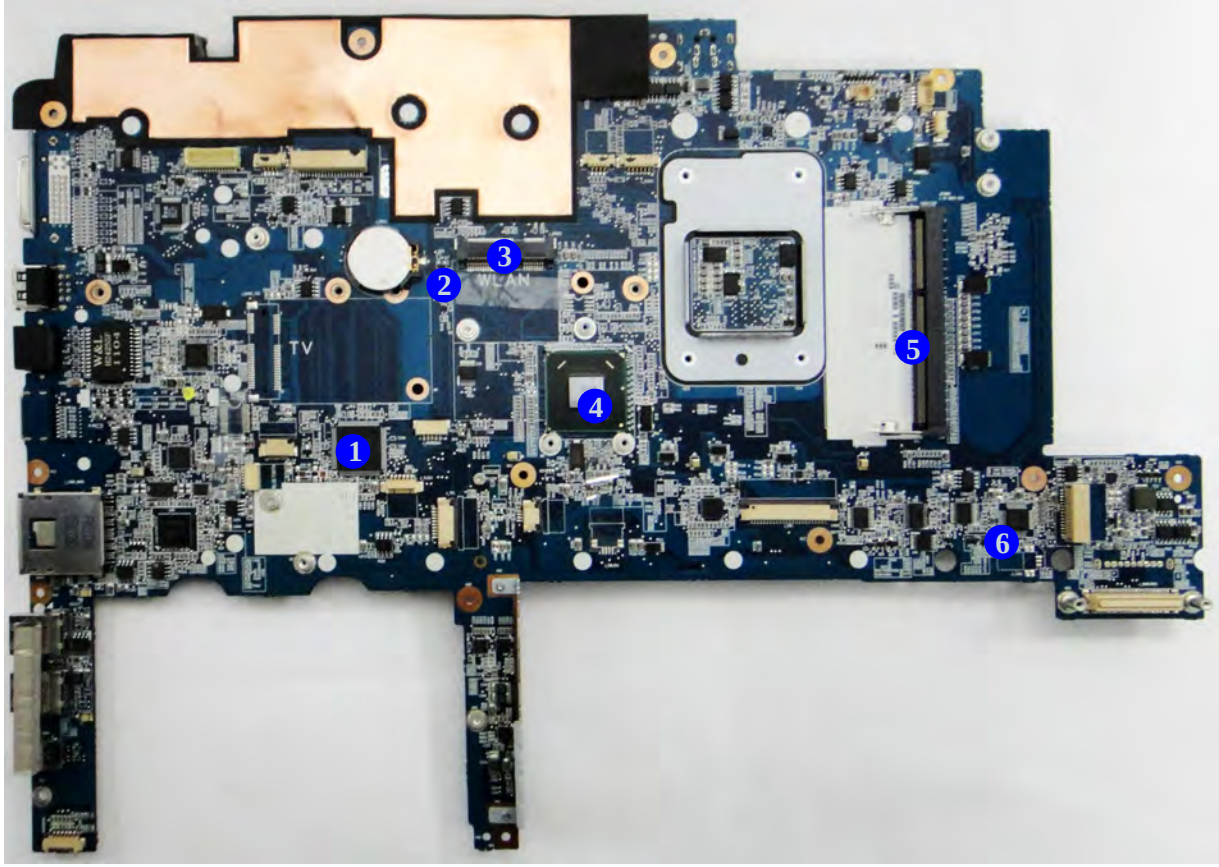

Mainboard Overview - Bottom (Key Parts)

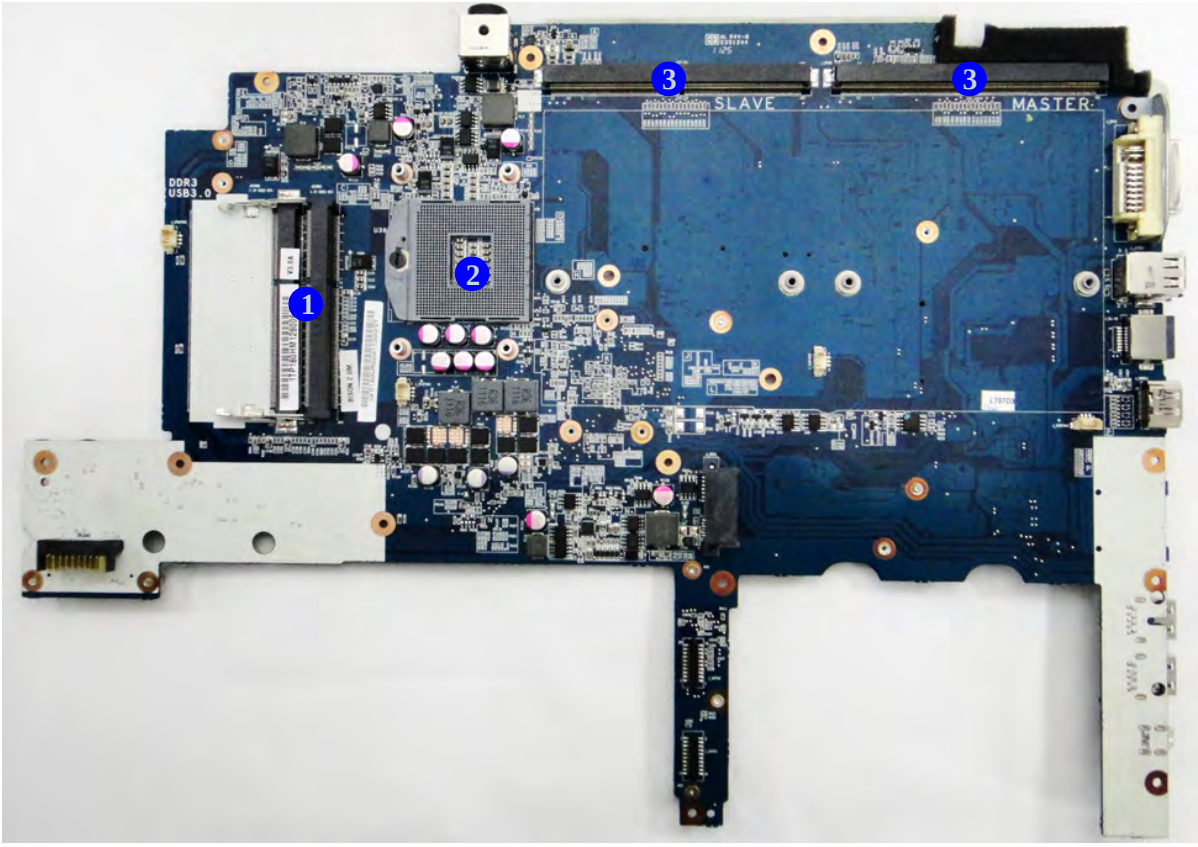

Figure 8
Mainboard Bottom Key Parts

1. Memory Slots DDR3 So-DIMM
2. CPU Socket
3. VGA Sockets

Mainboard Overview - Top (Connectors)

Figure 9
Mainboard Top Connectors

1. Touch Sensor Connector
2. MIC Connector
3. LCD Cable Connector
4. LED Cable Connector
5. Subwoofer Connector
6. CCD Cable Connector
7. Power Button Connector
8. Audio Cable Connector
9. New card Connector
10. Keyboard Cable Connector
11. Fingerprint Connector
12. Touch Pad Connector
13. LED Cable Connector
14. Game-Key Cable Connector
15. Bluetooth Module Connector
16. Mini-IEEE 1394 Port
17. USB 3.0 Ports
18. Multi-in-1 Card Reader

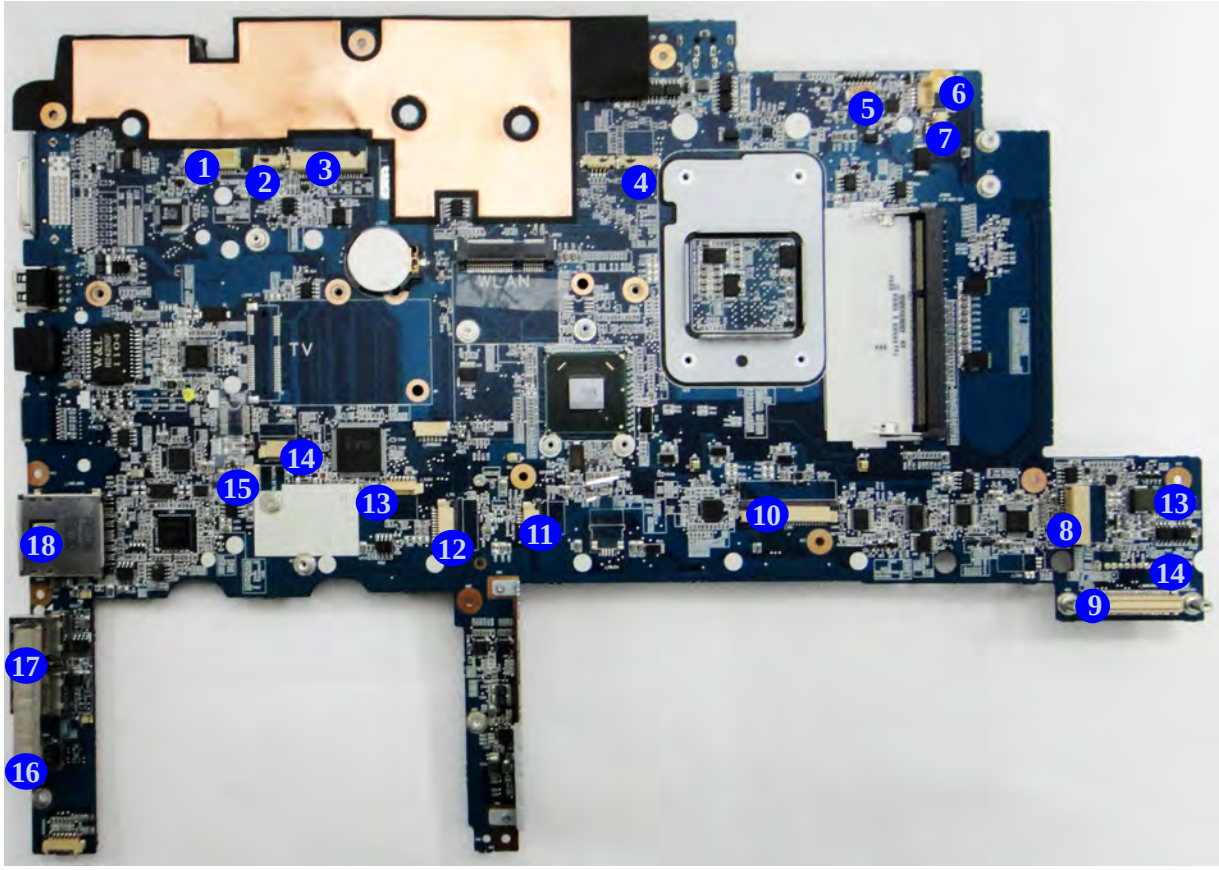

Mainboard Overview - Bottom (Connectors)

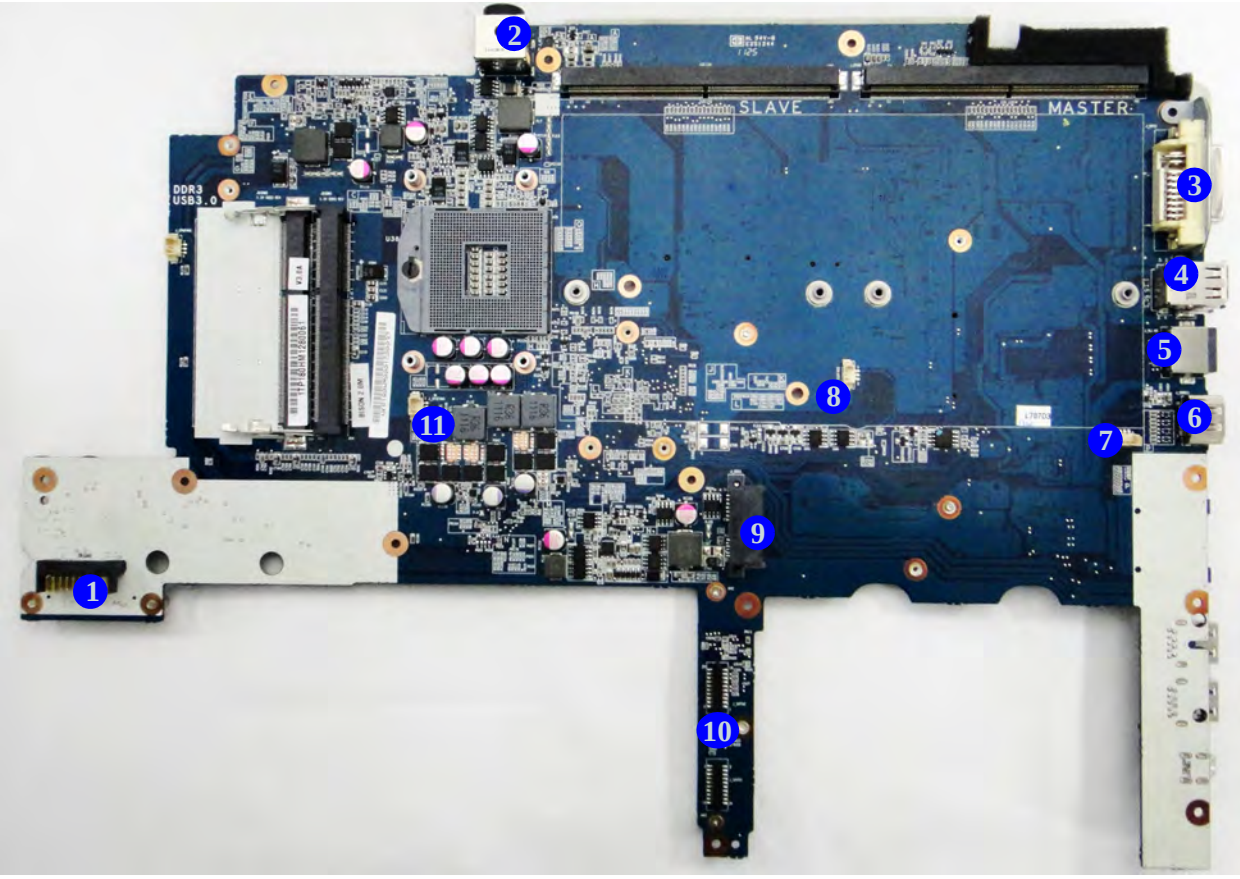

Figure 10
Mainboard Bottom Connectors

1. Battery Connector
2. DC-In Jack
3. DVI Port
4. USB 2.0 Ports
5. RJ-45 LAN Jack
6. HDMI-Out Port
7. VGA Fan 1
8. VGA Fan 2
9. ODD Connector
10. HDD Connectors
11. CPU Fan Connector

Chapter 2: Disassembly

Overview

This chapter provides step-by-step instructions for disassembling the ***P180HM*** series notebook's parts and subsystems. When it comes to reassembly, reverse the procedures (unless otherwise indicated).

We suggest you completely review any procedure before you take the computer apart.

Procedures such as upgrading/replacing the RAM, optical device and hard disk are included in the User's Manual but are repeated here for your convenience.

To make the disassembly process easier each section may have a box in the page margin. Information contained under the figure # will give a synopsis of the sequence of procedures involved in the disassembly procedure. A box with a lists the relevant parts you will have after the disassembly process is complete. **Note**: The parts listed will be for the disassembly procedure listed ONLY, and not any previous disassembly step(s) required. Refer to the part list for the previous disassembly procedure. The amount of screws you should be left with will be listed here also.

A box with a will also provide any possible helpful information. A box with a contains warnings.

An example of these types of boxes are shown in the sidebar.

Information

Warning

NOTE: All disassembly procedures assume that the system is turned **OFF**, and disconnected from any power supply (the battery is removed too).

Maintenance Tools

The following tools are recommended when working on the notebook PC:

- M3 Philips-head screwdriver
- M2.5 Philips-head screwdriver (magnetized)
- M2 Philips-head screwdriver
- Small flat-head screwdriver
- Pair of needle-nose pliers
- Anti-static wrist-strap

Connections

Connections within the computer are one of four types:

Locking collar sockets for ribbon connectors	To release these connectors, use a small flat-head screwdriver to gently pry the locking collar away from its base. When replacing the connection, make sure the connector is oriented in the same way. The pin1 side is usually not indicated.
Pressure sockets for multi-wire connectors	To release this connector type, grasp it at its head and gently rock it from side to side as you pull it out. Do not pull on the wires themselves. When replacing the connection, do not try to force it. The socket only fits one way.
Pressure sockets for ribbon connectors	To release these connectors, use a small pair of needle-nose pliers to gently lift the connector away from its socket. When replacing the connection, make sure the connector is oriented in the same way. The pin1 side is usually not indicated.
Board-to-board or multi-pin sockets	To separate the boards, gently rock them from side to side as you pull them apart. If the connection is very tight, use a small flat-head screwdriver - use just enough force to start.

Maintenance Precautions

The following precautions are a reminder. To avoid personal injury or damage to the computer while performing a removal and/or replacement job, take the following precautions:

1. **Don't drop it**. Perform your repairs and/or upgrades on a stable surface. If the computer falls, the case and other components could be damaged.
2. **Don't overheat it**. Note the proximity of any heating elements. Keep the computer out of direct sunlight.
3. **Avoid interference**. Note the proximity of any high capacity transformers, electric motors, and other strong magnetic fields. These can hinder proper performance and damage components and/or data. You should also monitor the position of magnetized tools (i.e. screwdrivers).
4. **Keep it dry**. This is an electrical appliance. If water or any other liquid gets into it, the computer could be badly damaged.
5. **Be careful with power**. Avoid accidental shocks, discharges or explosions.
   - Before removing or servicing any part from the computer, turn the computer off and detach any power supplies.
   - When you want to unplug the power cord or any cable/wire, be sure to disconnect it by the plug head. Do not pull on the wire.
6. **Peripherals** – Turn off and detach any peripherals.
7. **Beware of static discharge**. ICs, such as the CPU and main support chips, are vulnerable to static electricity. Before handling any part in the computer, discharge any static electricity inside the computer. When handling a printed circuit board, do not use gloves or other materials which allow static electricity buildup. We suggest that you use an anti-static wrist strap instead.
8. **Beware of corrosion**. As you perform your job, avoid touching any connector leads. Even the cleanest hands produce oils which can attract corrosive elements.
9. **Keep your work environment clean**. Tobacco smoke, dust or other air-born particulate matter is often attracted to charged surfaces, reducing performance.
10. **Keep track of the components**. When removing or replacing any part, be careful not to leave small parts, such as screws, loose inside the computer.

Power Safety Warning

Before you undertake any upgrade procedures, make sure that you have turned off the power, and disconnected all peripherals and cables (including telephone lines). It is advisable to also remove your battery in order to prevent accidentally turning the machine on.

Cleaning

Do not apply cleaner directly to the computer, use a soft clean cloth.
Do not use volatile (petroleum distillates) or abrasive cleaners on any part of the computer.

Disassembly Steps

The following table lists the disassembly steps, and on which page to find the related information. **PLEASE PERFORM THE DISASSEMBLY STEPS IN THE ORDER INDICATED.**

To remove the Battery:

1. Remove the battery *page 2 - 5*

To remove the Optical Device:

1. Remove the battery *page 2 - 5*
2. Remove the Optical device *page 2 - 6*

To remove the HDD:

1. Remove the battery *page 2 - 5*
2. Remove the HDD *page 2 - 7*

To remove the Keyboard:

1. Remove the battery *page 2 - 5*
2. Remove the System Memory *page 2 - 10*

To remove the System Memory:

1. Remove the battery *page 2 - 5*
2. Remove the System Memory *page 2 - 12*

To remove and install the Processor:

1. Remove the battery *page 2 - 5*
2. Remove the Processor *page 2 - 15*
3. Install the Processor *page 2 - 17*

To remove the VGA card:

1. Remove the battery *page 2 - 5*
2. Remove the VGA card *page 2 - 18*

To remove the Wireless LAN Module:

1. Remove the battery *page 2 - 5*
2. Remove the Keyboard *page 2 - 10*
3. Remove the Wireless LAN *page 2 - 20*

Removing the Battery

If you are confident in undertaking upgrade procedures yourself, for safety reasons it is best to remove the battery.

1. Turn the computer off, and turn it over.
2. Slide the latch 1 in the direction of the arrow.
3. Slide the latch 2 in the direction of the arrow, and hold it in place.
4. Lift the battery 4 up (***Figure b***) and out of the battery bay.

a.

b.

c.

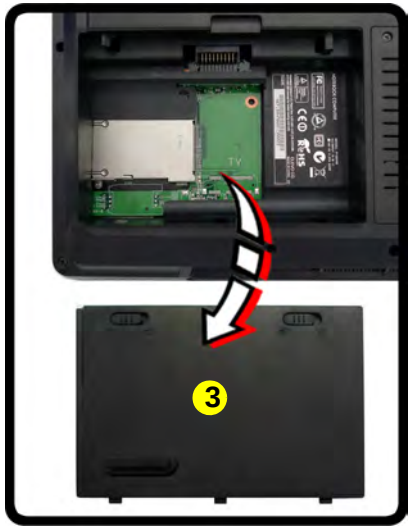

Figure 1
Battery Removal

a. Slide the latch 1 in the direction of the arrow and slide the latch 2 in the direction of the arrow, and hold it in place.
b. Release the battery.
c. Lift the battery out of the bay as indicated.

3. Battery

- 3 Screws

Figure 2
Optical Device Removal

a. Remove the screws.
b. Remove the cover.
c. Remove the screw.
d. Push the optical device out of the computer.

Removing the Optical (CD/DVD) Device

1. Turn off the computer, and turn it over and remove the battery (*page 2 - 5*).
2. Locate the component bay cover and remove screws 1 - 2, and remove the bay cover 4.
3. Remove screw 5.
4. Push the optical device drive 6 out of the bay and reverse the process to install the new device.

a.

d.

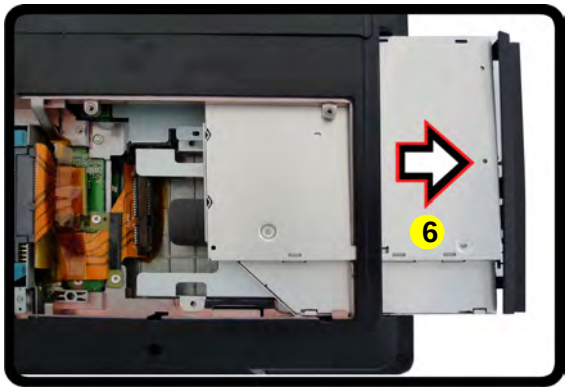

b.

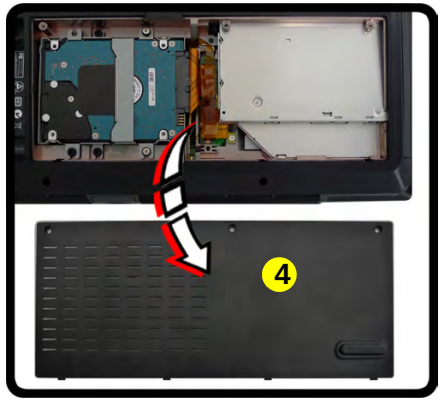

c.

4. Hard Disk Bay Cover
6. Optical Device

- 4 Screws

Blu-Ray Device Bezel Removal

Note that some Blu-Ray modules (e.g. Pioneer) have a small piece of mylar inserted in the left side (as viewed front on) of the bezel cover; in order to prevent the bezel cover of the module from being removed accidentally. If you need to replace the bezel cover, you will need to use a screwdriver to ease out and remove the mylar before attempting to remove the bezel cover. You will need to re-insert the mylar when replacing the bezel cover.

Removing the Hard Disk Drive

The hard disk drive is mounted in a removable case and can be taken out to accommodate other 2.5" SATA hard disk drives with a height of 9.5mm (h). Follow your operating system's installation instructions, and install all necessary drivers and utilities (as outlined in **Chapter 4 of the User's Manual**) when setting up a new hard disk.

Hard Disk Upgrade Process

1. Turn off the computer, and turn it over and remove the battery (*page 2 - 5*).
2. Locate the Hard disk bay cover and remove screws 1 & 3.
3. Remove the bay cover 4.

Figure 3
HDD Assembly Removal

a. Remove the screws.
b. Remove the cover

a.

b.

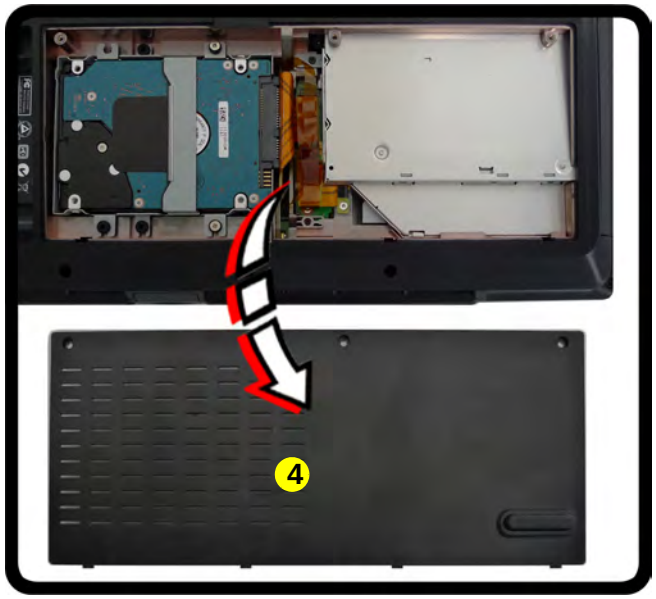

4. Hard disk Bay Cover

- 3 Screws

Figure 4
HDD Assembly Removal (cont'd.)

c. Remove the screws.
d. Lift the hard disk assembly up out off the computer.
e. Remove the screws and separate the HDD(s) from the connector and case.

4. Remove screws 5 - 8 and pull the tab to disconnect the connector 9 from hard disk assembly.
5. Lift the hard disk assembly 10 out of the computer.
6. Remove screws 11 - 18 (depending on how many hard disks you have installed in the assembly).
7. Separate the hard disk board connector 20 from the case 19 .
8. Separate the hard disk(s) 21 from the case.
9. Reverse the process to install a new hard disk(s).

c.

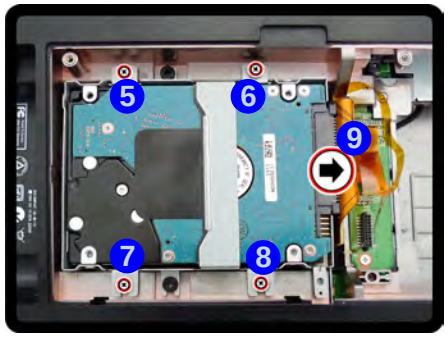

d.

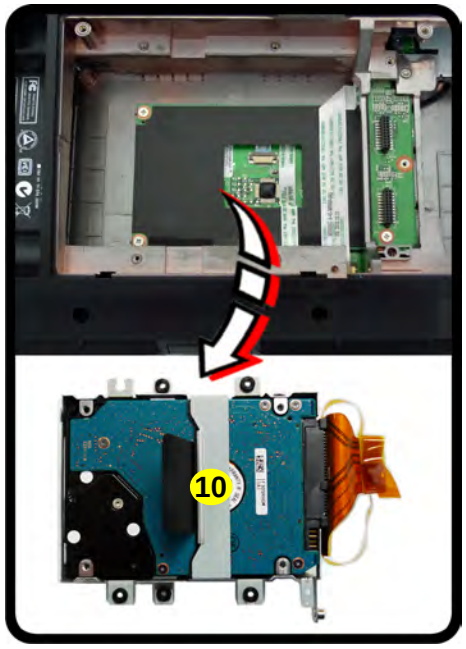

e.

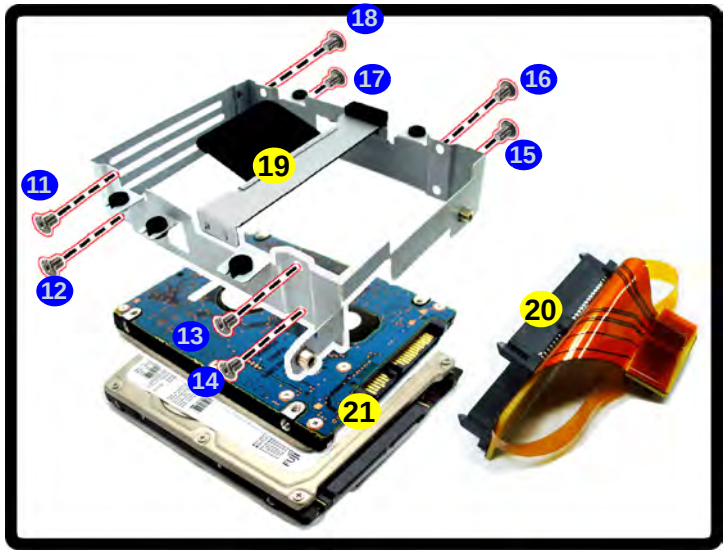

10. Hard Disk Assembly
19. Hard Disk Case
20. Hard Disk Board Connector
21. Hard Disks

- 8 Screws

Removing the Hard Disk(s) in the Secondary HDD Bay

1. Turn **off** the computer, and turn it over and remove the battery and r.emove the optical device drive
2. The secondary hard disk bay is located under the optical device drive.
3. Remove screws 1 - 6.
4. Remove the retaining pin 7 and disconnect the hard disk cable 8.
5. Lift the hard disk assembly 9 out of the compartment.
6. Remove the screws 10 - 13 to release the hard disk 16 from the case 14 .
7. Remove the cable 15 .
8. Reverse the process to install any new hard disk(s).

a.

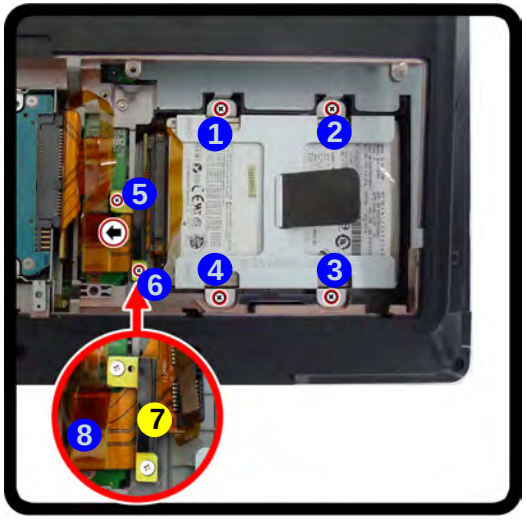

b.

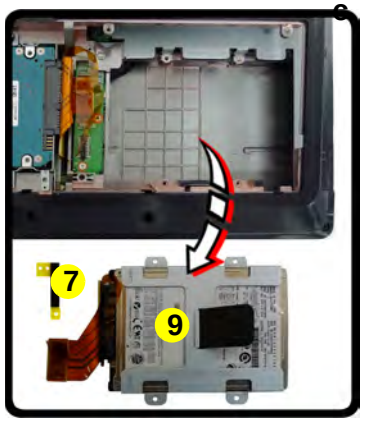

c.

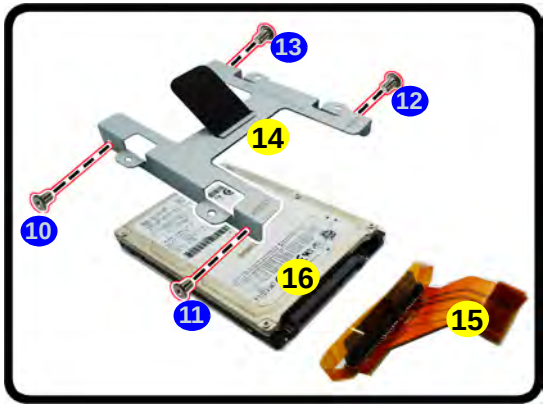

Figure 5
Secondary HDD Assembly Removal

a. Remove the screws and the retaining pin and disconnect the hard disk cable.
b. Lift the hard disk assembly out off the computer.
c. Remove the screws to release the hard disk from the case.

9. Hard Disk Assembly
14. Hard Disk Case
15. Hard Disks Cable
16. Hard Disks

- 10 Screws

Figure 6
Keyboard Removal

a. Remove the screws from the bottom of the computer.
b. Turn the computer over, open the lid/LCD and unsnap the LED cover at point 3.
c. Lift the LED cover module and disconnect the cable.
d. Remove the screws from the keyboard.

Removing the Keyboard

1. Turn off the computer, and turn it over and remove the battery (***page 2 - 5***).
2. Remove screws 1 & 2 from the bottom of the computer.
3. Turn the computer over, open the Lid/LCD, and carefully (a cable is connected to the underside of the LED cover module) unsnap up the LED cover module 4 from point 3 on the right.
4. Lift up the LED cover module 4 and disconnect the cable 5.
5. Remove screws 6 - 10 from the keyboard.

a.

b.

c.

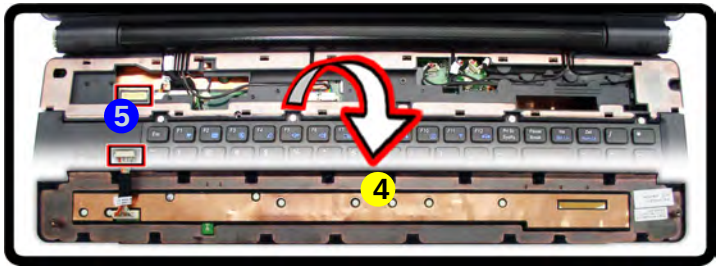

d.

4. LED cover module

- 7 Screws

6. Carefully lift the keyboard up, being careful not to bend the keyboard ribbon cable.
7. Disconnect the keyboard ribbon cable 11 from the locking collar socket 12.
8. Remove the keyboard 13 .

e.

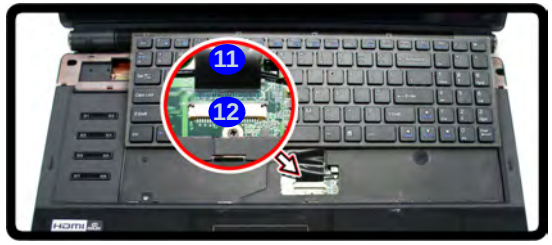

f.

Keyboard Tabs

Re-Inserting the Keyboard

When re-inserting the keyboard firstly align the **four** keyboard tabs at the bottom (***Figure 8e***) at the bottom of the keyboard with the slots in the case.

Figure 7
Keyboard Removal (cont'd.)

e. Disconnect the cable from the locking collar.
f. Remove the keyboard.
g. Snap down the LED cover.
h. Push the LED cover on the left side at point 17 and the slide toward the right to secure it in place.

9. Replace keyboard (make sure to reconnect the keyboard cable).
10. Snap the LED cover module down 14 at the top fo the module at point 15 & 16.
11. Push the LED cover module down on the left side at point 17, and then slide the module to the right (as illustrated) and snap down to secure it in place.
12. Replace the screws on the bottom of the computer.

g.

h.

13. Keyboard
14. LED cover module

Figure 8
RAM-1 Module Removal

a. Remove the screws.
b. Lift the cover and disconnect the fan cable.

Removing the System Memory (RAM) -1

The computer has three memory sockets for 204 pin Small Outline Dual In-line Memory Modules (SO-DIMM) DDR III (DDR3) supporting 1066/1333 MHz. The main memory can be expanded up to 8GB. The total memory size is automatically detected by the POST routine once you turn on your computer.

Removing the Primary System Memory (2 memory sockets)

1. Turn off the computer, and turn it over and remove the battery (***page 2 - 5***).
2. Locate the component bay cover and remove screws 1 - 4.
3. Carefully (**a fan and cable are attached to the under side of the cover**) lift up the bay cover.
4. Carefully disconnect the fan cable 5 **in the order** A, B & C and remove the cover 6.
5. The primary memory sockets are visible at point 7

a.

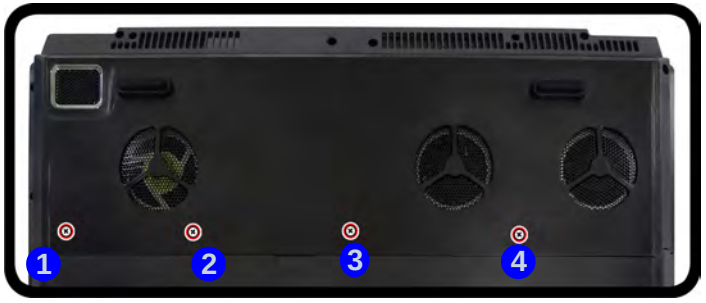

b.

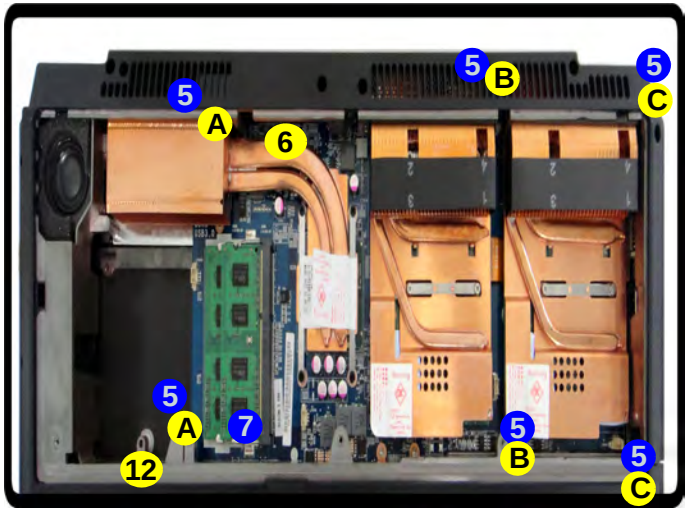

6. Component Bay Cover

- 4 Screws

6. Gently pull the two ***release latches*** 8 ***&*** 9 ***on the sides of the memory socket in the direction indicated by the arrows (Figure d***).
7. The RAM module 10 will pop-up (***Figure e***), and you can then remove it.

d.

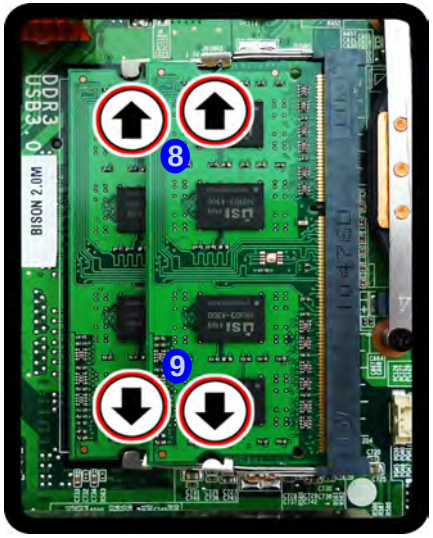

e.

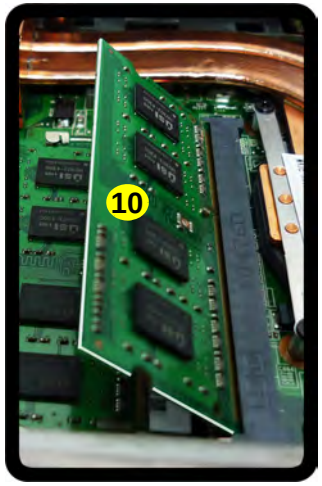

8. Pull the latches to release the second module if necessary.
9. Insert a new module holding it at about a 30° angle and fit the connectors firmly into the memory slot.
10. The module's pin alignment will allow it to only fit one way. Make sure the module is seated as far into the socket as it will go. DO NOT FORCE the module; it should fit without much pressure.
11. Press the module in and down towards the mainboard until the slot levers click into place to secure the module.
12. Replace the component bay cover and make sure you reconnect the fan cable (see ***Figure 9 on page 2 - 13***).
13. Replace all the component bay cover screws.
14. Restart the computer to allow the BIOS to register the new memory configuration as it starts up.

Figure 9
RAM-1 Module Removal (cont'd.)

d. Pull the release latch.
e. Remove the module.

Contact Warning

Be careful not to touch the metal pins on the module's connecting edge. Even the cleanest hands have oils which can attract particles, and degrade the module's performance.

10. RAM Module

Figure 10
RAM-2 Module Removal (cont'd.)

a. Remove screws. and keyboard plate.
b. Remove the keyboard plate.
c Pull the release latch(es) and remove the module.

Removing the System Memory (RAM) - 2

Memory Upgrade Process

1. Turn off the computer, and turn it over and remove the battery (***page 2 - 5***) and remove the keyboard (***page 2 - 5***).
2. Remove screws 1 - 3 from the keyboard shielding plate.
3. Remove the keyboard shielding plate 4.
4. Gently pull the two ***release latches*** 5 ***&*** 6 ***on the sides of the memory socket in the direction indicated by the arrows (Figure c***).
5. The RAM module 7 will pop-up, and you can then remove it.

a.

b.

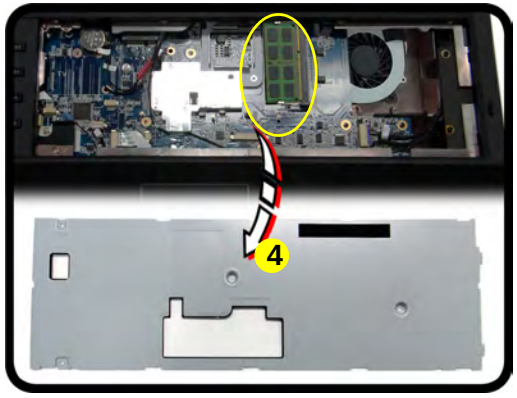

c.

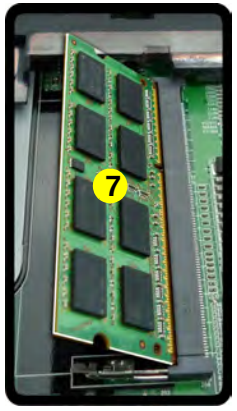

4. Keyboard Shielding Plate
7. RAM Module(s)

- 3 Screws

6. Insert a new module holding it at about a 30° angle and fit the connectors firmly into the memory slot.
7. The module's pin alignment will allow it to only fit one way. Make sure the module is seated as far into the socket as it will go. DO NOT FORCE the module; it should fit without much pressure.
8. Press the module in and down towards the mainboard until the slot levers click into place to secure the module.
9. Replace the shielding plate, keyboard, LED cover module and screws (make sure to reconnect the keyboard cable) -see ***Figure 9 on page 2 - 13***.
10. Restart the computer to allow the BIOS to register the new memory configuration as it starts up.

Removing and Installing the Processor

Processor Removal Procedure

1. Turn off the computer, and turn it over, remove the battery (*page 2 - 5*), and component bay cover (*page 2 - 10*).
2. The CPU heat sink will be visible at point A (Figure 6a) on the mainboard.
3. Remove screws 4, 3, 2, 1 , the reverse order indicated on the label (*Figure 6b*)
4. Carefully (it may be hot) lift up the heat sink 5 off the computer.

a.

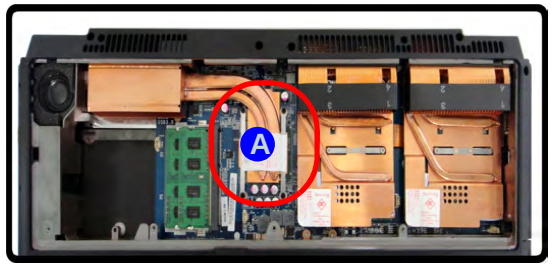

b.

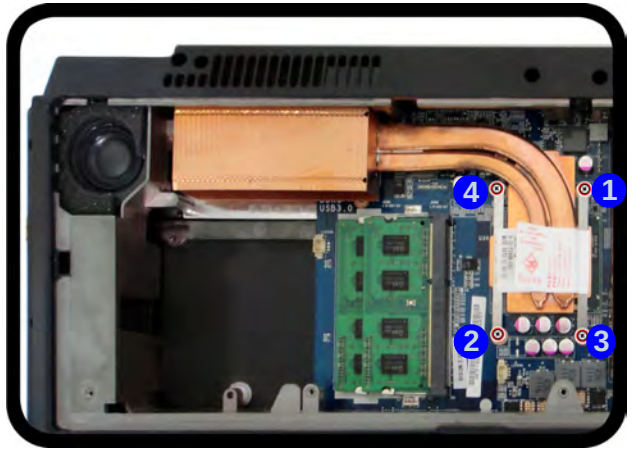

c.

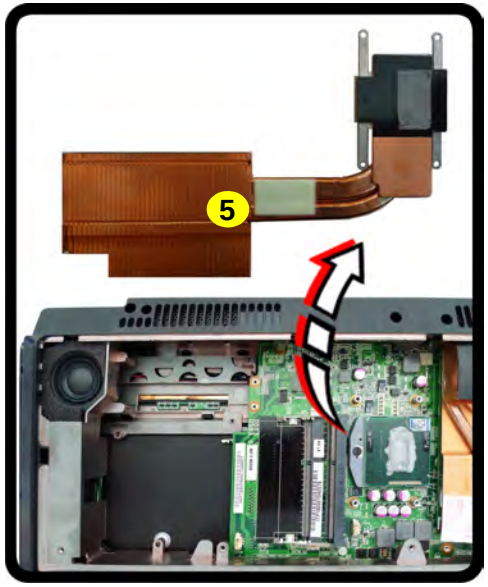

Figure 11
Processor Removal

a. Locate the heat sink.
b. Remove the screws.
c. Remove the heat sink

Caution

The heat sink, and CPU area in general, contains parts which are subject to high temperatures. Allow the area time to cool before removing these parts.

5. CPU Heat Sink

- 4 Screws

Figure 12
Processor Removal (cont'd)

d. Turn the release latch to unlock the CPU.
e. Lift the CPU out of the socket.

5. Turn the release latch 6 towards the unlock symbol 🔓, to release the CPU (***Figure 12a***).
6. Carefully (it may be hot) lift the CPU 7 up out of the socket (***Figure 12b***).
7. See ***page 2 - 17*** for information on inserting a new CPU.
8. Reverse the process to install a new CPU.
9. When re-inserting the CPU, pay careful attention to the pin alignment, it will fit only one way (DO NOT FORCE IT!).

d.

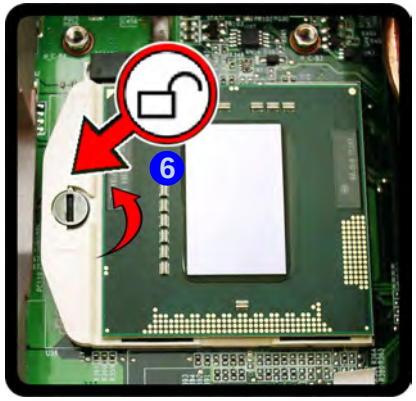

Unlock

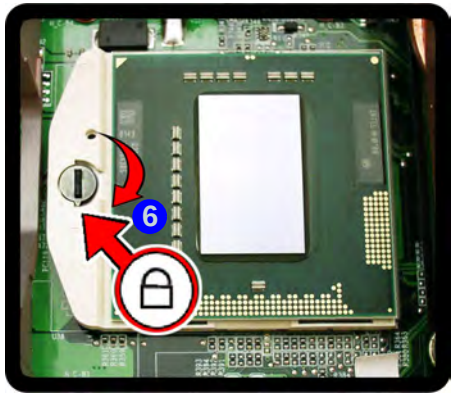

Lock

e.

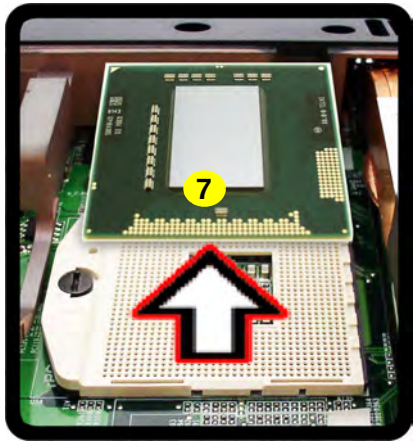

Caution

The heat sink, and CPU area in general, contains parts which are subject to high temperatures. Allow the area time to cool before removing these parts.

14. CPU

Processor Installation Procedure

1. Insert the CPU (A), pay careful attention to the pin alignment, it will fit only one way (DO NOT FORCE IT!), and turn the release latch (B) towards the lock symbol 🔒 (***Figure 13b***).
2. **Remove the sticker** (C) (***Figure 13c***) from the heat sink.
3. Insert the heat sink (D) as indicated in ***Figure 13c***.
4. Tighten the CPU heat sink screws (1), (2), (3), & (4) (***Figure 13d***).
5. Replace the component bay cover and tighten the screws (***page 2 - 15***).

Figure 13
Processor Installation

a. Insert the CPU.
b. Turn the release latch towards the lock symbol.
c. Remove the sticker from the heat sink and insert the heat sink.
d. Tighten the screws.

a.

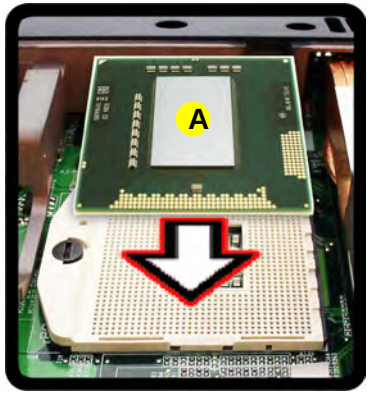

b.

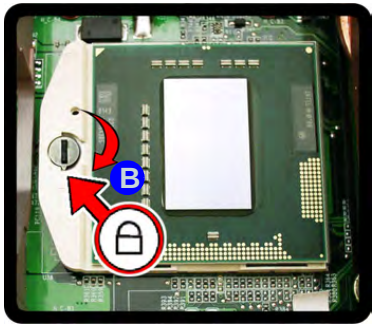

c.

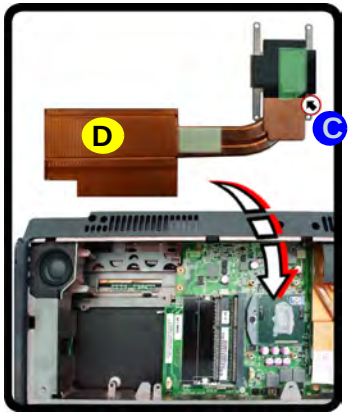

d.

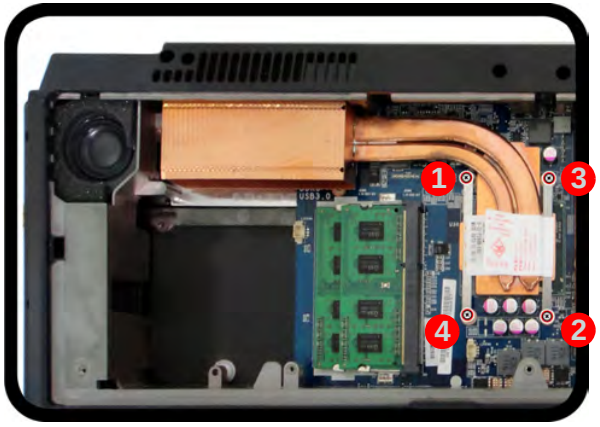

A. CPU
D. Heat Sink

- 4 Screws

Figure 14
VGA Card Removal

a. Locate the VGA cards.
b. Remove the screws.
c. Remove the heat sink
d. Remove the screws
e. Remove the VGA cards.

Removing the VGA Card

1. Turn off the computer, and turn it over and remove the battery (***page 2 - 5***) and component bay cover (***page 2 - 5***).
2. The VGA card will be visible at point 1 on the mainboard (***Figure 16a***).
3. Remove screws 2 - 5 **in the order indicated on the label** (and on the heat sink unit itself).
4. Remove the heat sink unit 6 (two heat sink units are pictured here).
5. Remove screws 7 & 8 from the video card (two video cards are pictured).
6. Carefully remove the video cards 9.
7. If your system includes two video cards you will need to disconnect the cable 10 between the master and slave cards (do not forget to reconnect the cable if you are replacing two cards).

a.
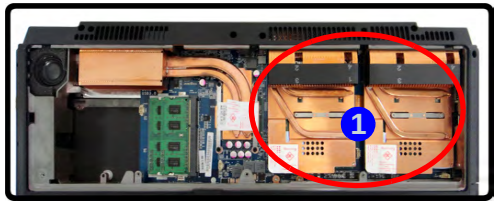

b.
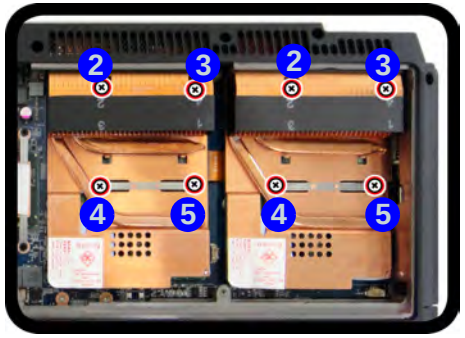

c.
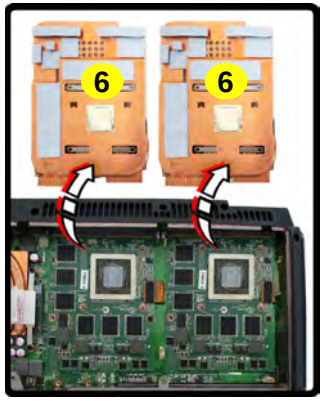

d.
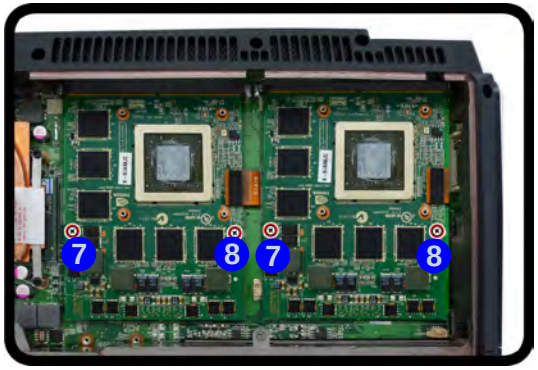

e.
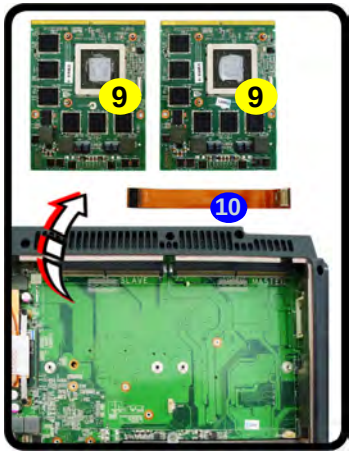

6. VGA Card Heatsink
9. VGA Card Module

- 12 Screws

Installing the VGA Card

1. Prepare to fit the VGA card 1 into the slot by holding it at about a 30° angle.
2. The card needs to be fully into the slot, and the VGA card and socket have a guide-key and pin which align to allow the card to fit securely.
3. Fit the connectors firmly into the socket, straight and evenly.
4. DO NOT attempt to push one end of the card in ahead of the other.
5. The card's pin alignment will allow it to only fit one way. **Make sure the module is seated as far into the socket as it will go** (none of the gold colored contact should be showing). DO NOT FORCE the card; it should fit without much pressure.
6. Secure the card with screws 2 & 3 (two video cards are pictured).
7. Press the heat sink unit 4 onto the board using two hands at points 5 & 6 and secure the screws in the order indicated in (*Figure 16c*).
8. Attach the VGA card fan and secure with the screws as indicated in (*page 2 - 18*).
9. Reinsert the component bay cover, and secure with the screws as indicated in (*page 2 - 12*).

Figure 15
VGA Card Installation

a. Carefully Insert the VGA Card.
b. Tighten the screws.
c. Press the VGA heat sink.

a.

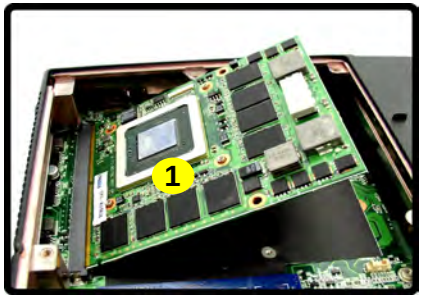

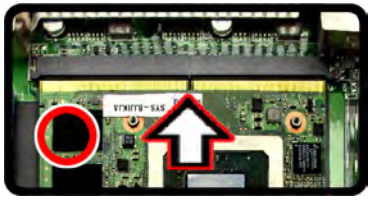

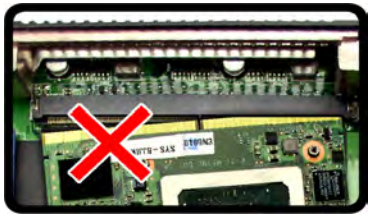

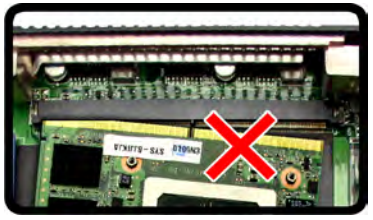

b.

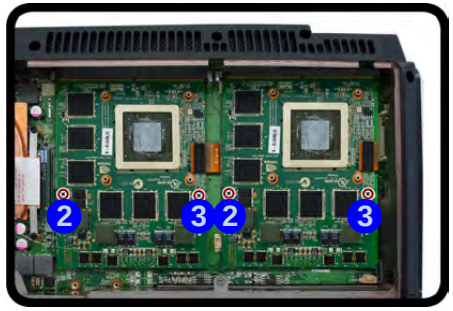

c.

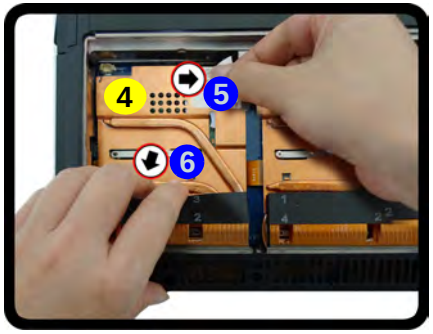

1. VGA card Module
4. VGA heat sink

4 Screws

Figure 16
Wireless LAN Module Removal

a. Locate the WLAN module.
b. Remove the screw and disconnect the cables.
c. Remove the WLAN module.

Note: Make sure you reconnect the antenna cables.

Removing the Wireless LAN Module

1. Turn off the computer, and turn it over, remove the battery (***page 2 - 5***), keyboard and keyboard shielding plate (***page 2 - 10***).
2. The Wireless LAN Module will be visible at point 1.
3. Remove the screw 2 and carefully disconnect cables 3 - 4.
4. The Wireless LAN Module 5 (***Figure c***) will pop-up, and you can remove it.

a.

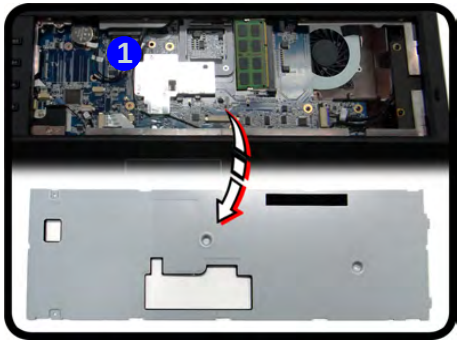

b.

c.

5. Wireless LAN Module

- 1 Screw

Appendix A: Part Lists

This appendix breaks down the ***P180HM*** series notebook's construction into a series of illustrations. The component part numbers are indicated in the tables opposite the drawings.

Note: This section indicates the *manufacturer's* part numbers. Your organization may use a different system, so be sure to cross-check any relevant documentation.

Note: Some assemblies may have parts in common (especially screws). However, the part lists DO NOT indicate the total number of duplicated parts used.

Note: Be sure to check any update notices. The parts shown in these illustrations are appropriate for the system at the time of publication. Over the product life, some parts may be improved or re-configured, resulting in *new* part numbers.

Part List Illustration Location

The following table indicates where to find the appropriate part list illustration.

Table A- 1
Part List Illustration Location

Parts	P180HM
Top with Fingerprint	*page A - 3*
Top without Fingerprint	*page A - 4*
Bottom	*page A - 5*
LCD	*page A - 6*
Mainboard	*page A - 7*
DVD	*page A - 8*
COMBO	*page A - 9*

Top with Fingerprint

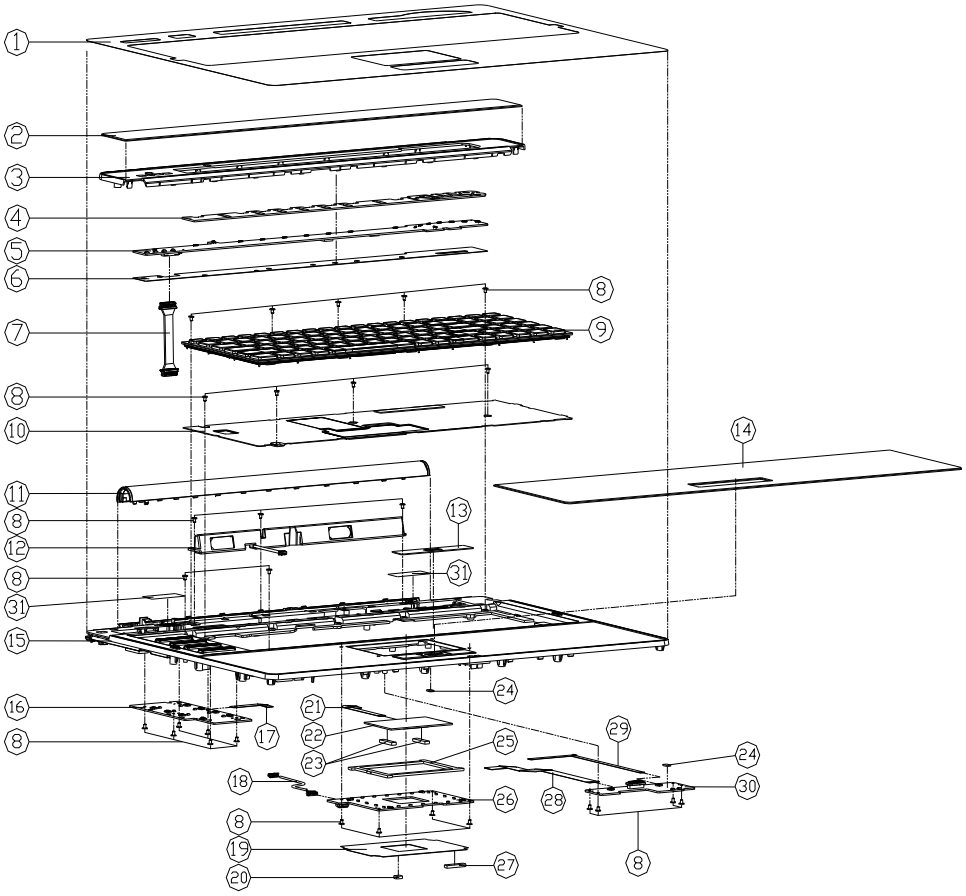

ITEM	PART NAME	PART NO	REMARK
1	TOP CASE PROTECT MYLAR PET M980NU	6-40-M9802-021	
2	PMMA FOR CENTER COVER P180HM	6-42-P1802-010	
3	CENTER COVER MODULE M980NU	6-42-M9802-203	
4	LIGHT GUIDE FOR CENTER COVER PC M980NU	6-42-M9802-092	
5	TOUCH SENSOR BOARD V2.0 P180HM	6-77-P1801-D02	
6	MYLAR CU FOIL FOR CENTER COVER M980NU	6-40-M9802-030	
7	WIRE CABLE FOR M/B TO TOUCH-SENSOR 28P M980NU	6-43-M9803-012	
8	SCREW M2*3L K1 NI ICT NY (DD=ø4.5,DT=0.4)	6-35-B1120-3RE	
9	K/B USA??1A FRAME (US) MODULE M980NU/W870CU/X7200	6-79-M980NU0K-010	
10	KB SHIELDING MODULE SECC P180HM	6-33-P1802-101	
11	INVERTOR COVER MODULE P180HM	6-33-P1802-200	
12	SPEAKER L-R-REAR MODULE 15W 4Ω 4P P180HM	6-23-5P180-011	
13	PMMA FOR GP KNOB WITH FINGER M980NU	6-42-M9802-071	
14	PMMA FOR PLAM REST M980NU	6-42-M9802-061	
15	TOP CASE MODULE M980NU	6-39-M9802-014	
16	GAME KEY BOARD V2.0 P180HM	6-77-P1807-D02	
17	FFC CABLE 12P FOR M/B TO GAME-KEY BOARD V2.0	6-43-M9800-011	
18	WIRE CABLE FOR M/B TO TOUCH-PAD-LED 6P M980NU	6-43-M9802-021	
19	TOUCH PAD LED BOARD MYLAR FR83 P180HM	6-40-P1802-011	
20	RUBBER FOR TOP CASE 7.5*5*1.6T MM X8100	6-47-X8102-030	
21	FFC CABLE 12P FOR M/B TO TOUCH PAD BOARD V2.0	6-43-M9802-011	
22	TOUCH PAD TM-00398-003 W840T	6-49-W84T2-020	
23	TOUCH PAD SPONGE (18*5*2) CR4305 M980NU	6-47-M9802-020	
24	RUBBER FOR TOP CASE 8*6*2T MM X8100	6-47-X8102-010	
25	LIGHT GUIDE FOR TOUCH PAD PC M980NU	6-42-M9802-0A1	
26	BARE PCB TOUCH PAD LED BOARD V2.0 P180HM	6-77-P180G-D02	
27	RUBBER FOR TOP CASE 25*3.5*1.6T MM X8100	6-47-X8102-020	
28	FFC CABLE 12P FOR M/B TO CLICK BOARD V2.0	6-43-M9800-041	
29	FFC CABLE 4P FOR M/B TO FINGERPRINT BOARD V2.0 M980NU	6-43-M980F-011	
30	CLICK BOARD V2.0+FINGER PRINTER BOARD V2.0 ASSY P180HM	6-77-P180A-N02A	
31	TOP CASE MYLAR FR83 25*7*0.05 P180HM	6-40-P1802-030	

Figure A - 1
Top with Fingerprint

Top without Fingerprint

Figure A - 2
Top without Fingerprint

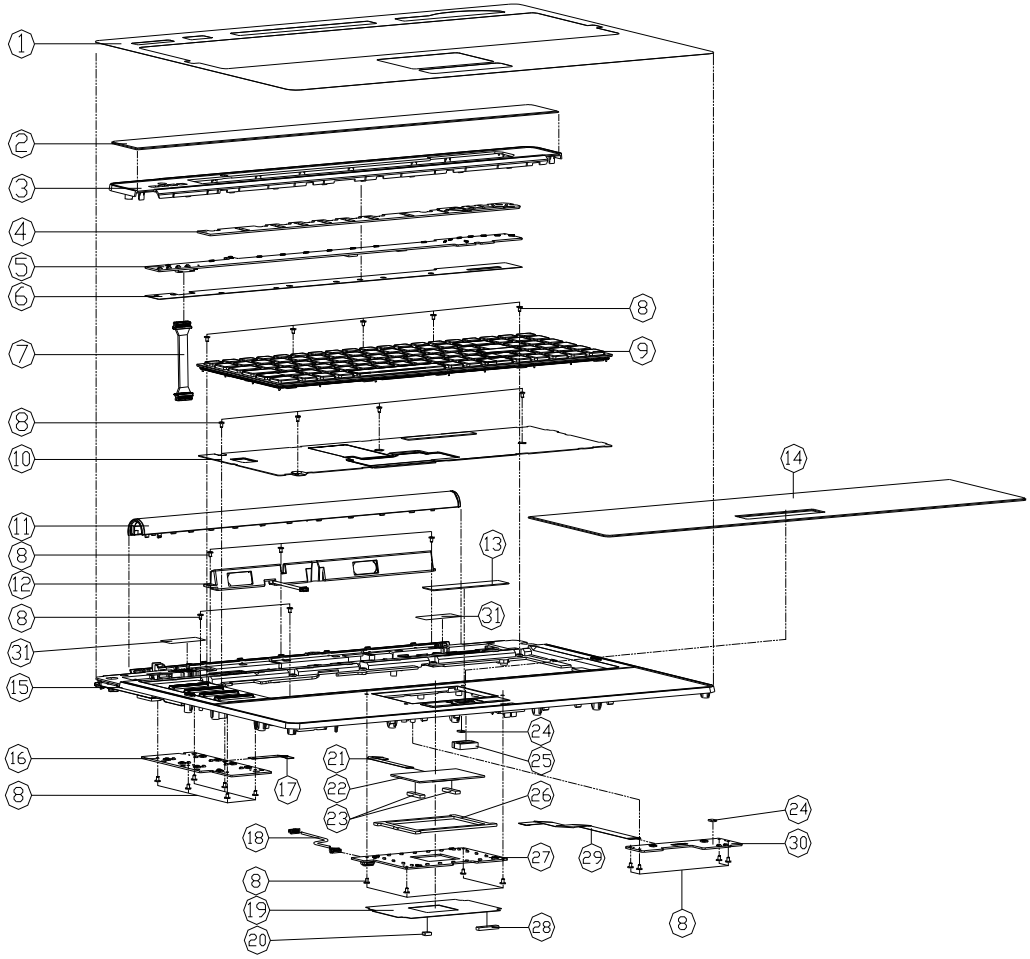

ITEM	PART NAME	PART NO	REMARK
1	TOP CASE PROTECT MYLAR PET M980NU	6-40-M9802-021	
2	PMMA FOR CENTER COVER P180HM	6-42-P1802-010	
3	CENTER COVER MODULE M980NU	6-42-M9802-203	
4	LIGHT GUIDE FOR CENTER COVER PC M980NU	6-42-M9802-092	
5	TOUCH SENSOR BOARD V2.0 P180HM	6-77-P1801-D02	
6	MYLAR CU FOIL FOR CENTER COVER M980NU	6-40-M9802-030	
7	WIRE CABLE FOR M/B TO TOUCH-SENSOR 28P M980NU	6-43-M9803-012	
8	SCREW M2*3L KI NI ICT NY (DD=Ø4.5,DT=0.4)	6-35-B1120-3RE	
9	K/B USK73% FRAME (US) MODULE M980NU/W870CU/X7200	6-79-M980NUDK-010	
10	KB SHIELDING MODULE SECC P180HM	6-33-P1802-101	
11	INVERTOR COVER MODULE P180HM	6-33-P1802-200	
12	SPEAKER L-R-REAR MODULE 1.5W 4 Ω 4P P180HM	6-23-5P180-011	
13	PMMA FOR GP KNOB W/O FINGER M980NU	6-42-M9802-081	
14	PMMA FOR PLAM REST M980NU	6-42-M9802-061	
15	TOP CASE MODULE M980NU	6-39-M9802-014	
16	GAME KEY BOARD V2.0 P180HM	6-77-P1807-D02	
17	FFC CABLE 12P FOR M/B TO GAME-KEY BOARD V2.0	6-43-M9800-011	
18	WIRE CABLE FOR M/B TO TOUCH-PAD-LED 6P M980NU	6-43-M9802-021	
19	TOUCH PAD LED BOARD MYLAR FR83 P180HM	6-40-P1802-011	
20	RUBBER FOR TOP CASE 7.5*5*1.6T MM X8100	6-47-X8102-030	
21	FFC CABLE 12P FOR M/B TO TOUCH PAD BOARD V2.0	6-43-M9802-011	
22	TOUCH PAD TM-00398-003 W840T	6-49-W84T2-020	
23	TOUCH PAD SPONGE (18*5*2) CR4305 M980NU	6-47-M9802-020	
24	RUBBER FOR TOP CASE 8*6*2T MM X8100	6-47-X8102-010	
25	RUBBER FOR GP KNOB DUMMY M980NU	6-47-M9802-050	
26	LIGHT GUIDE FOR TOUCH PAD PC M980NU	6-42-M9802-0A1	
27	BARE PCB TOUCH PAD LED BOARD V2.0 P180HM	6-77-P180G-D02	
28	RUBBER FOR TOP CASE 25*35*1.6T MM X8100	6-47-X8102-020	
29	FFC CABLE 12P FOR M/B TO CLICK BOARD V2.0	6-43-M9800-041	
30	CLICK BOARD (W/O FP) V2.0 P180HM	6-77-P1802-D02-1	
31	TOP CASE MYLAR FR83 25*7*0.05 P180HM	6-40-P1802-030	

Bottom

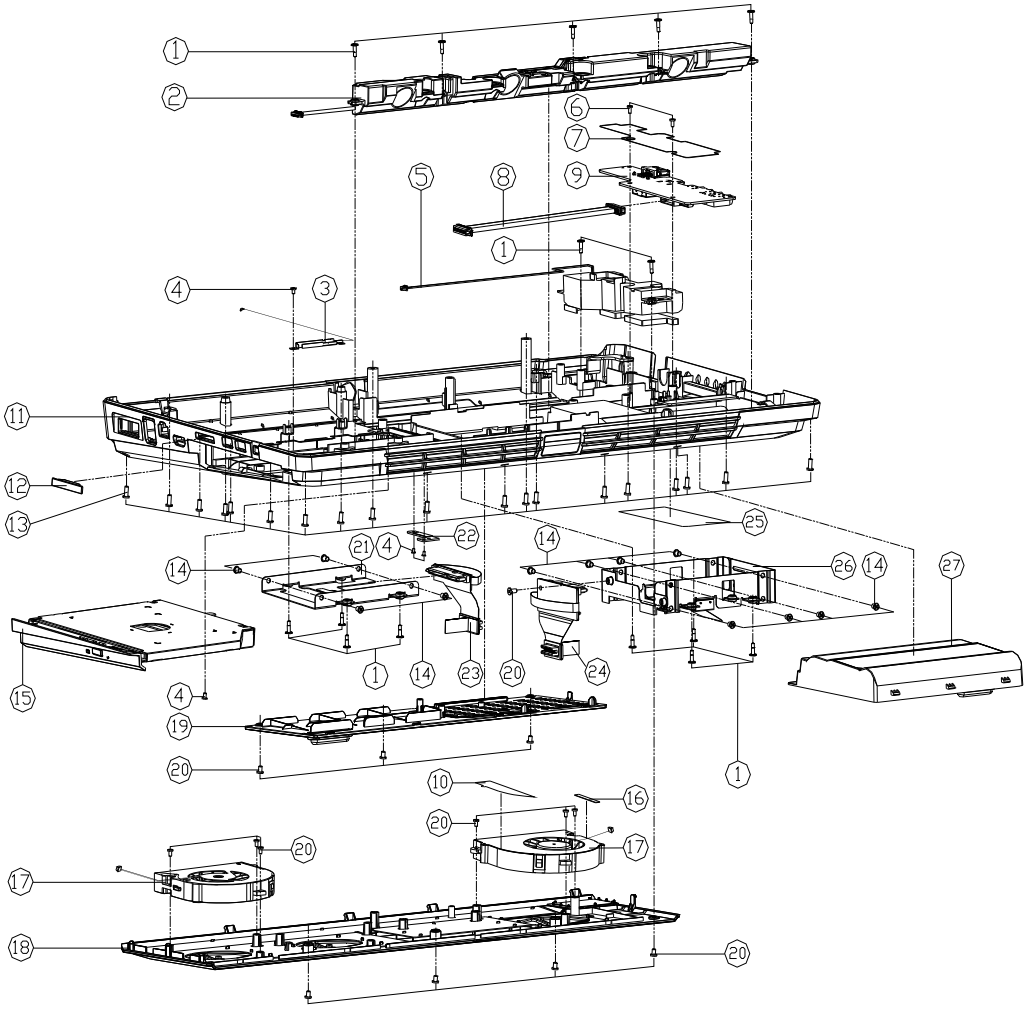

Figure A - 3
Bottom

ITEM	PART NAME	PART NO	REMARK
1	SCREW M2*7.5L DI=21 L=45 S=25 K NI ICT	6-35-B1120-750	
2	SPEAKER L+R MODULE(L)-FRONT & CENTER 2W 4Ω6P P180HM	6-23-5P180-022	
3	ANTENNA BLUETOOTH WGT BT PIFA 2.4G L= 285MM M74OS	6-23-7M74S-030	
4	SCREW M2*3L KI NI ICT NY (OD=ø4.5,DT=0.4)	6-35-B1120-3RE	
5	SPEAKER SUB.WOOFER MODULE 2W 4Ω2P P180HM	6-23-5P180-030	
6	SCREW M2.5*5L [illegible]0.4MM KI BK/Z ICT NY	6-35-B6125-5R0	
7	AUDIO BOARD MYLAR FR83 M980NU	6-40-M980S-020	
8	WIRE CABLE 30PIN W/8 TO AUDIO BOARD FOR P180HM(L)	6-43-P1800-011	
9	AUDIO BOARD V3.0A P180HM	6-77-P1808-D03A	
10	CPU FAN MYLAR FR83 59.7*12.8*0.125 P180HM	6-40-P180S-040	
11	BOTTOM CASE MODULE P180HM	6-39-P1803-012	
12	CARD READER RUBBER (信越 KE-5612GU BLACK 60 M980NU	6-47-M980E-011	
13	SCREW M2.5*8L KI BK/Z NY ICT	6-35-B6125-8R0	
14	SCREW M3*2.5L KI NI ICT NY	6-35-B1130-2R5	
15	SATA DVD SUPER MULTI 24X/8X ASS'Y P180HM	6-79-P180HM0Q-010	OPTION
15	SATA BLU-RAY COMBO 6X ASS'Y P180HM	6-79-P180HM0W-010	OPTION
16	TAPE MYLAR (C),MYLAR M550J	6-40-M55J2-030	
17	FAN(CD) 70*70*25MM 5V 0.4A 0.7A,1000RPM 37DB[illegible]	6-23-AW15H-010	
18	CPU COVER MODULE P180HM	6-42-P180S-102	
19	P180HM HDD COVER MODULE	6-42-P180J-101	
20	SCREW M2.5*5L KI BK/Z ICT NY	6-35-B6125-5RA	
21	HDD 3 BKT MODULE P180HM	6-33-P180J-100	
22	SUPPORTER MODULE FOR 3ND HDD FPC P180HM	6-40-P1803-101	ONLY FOR 3ND HDD FPC
23	FPC CABLE 20PIN W/8 TO 3RD SATA HDD FOR P180HM	6-43-P180J-012	
24	FPC CABLE 20PIN W/8 TO DUAL SATA HDD FOR P180HM	6-43-P180J-023	
25	PRODUCT LABEL FOR P180HM	6-45-P180HM03-010	
26	2IN1 HDD BKT MODULE M980NU	6-33-M980J-100	
27	[illegible]	6-87-P180S-4271	

LCD

Figure A - 4
LCD

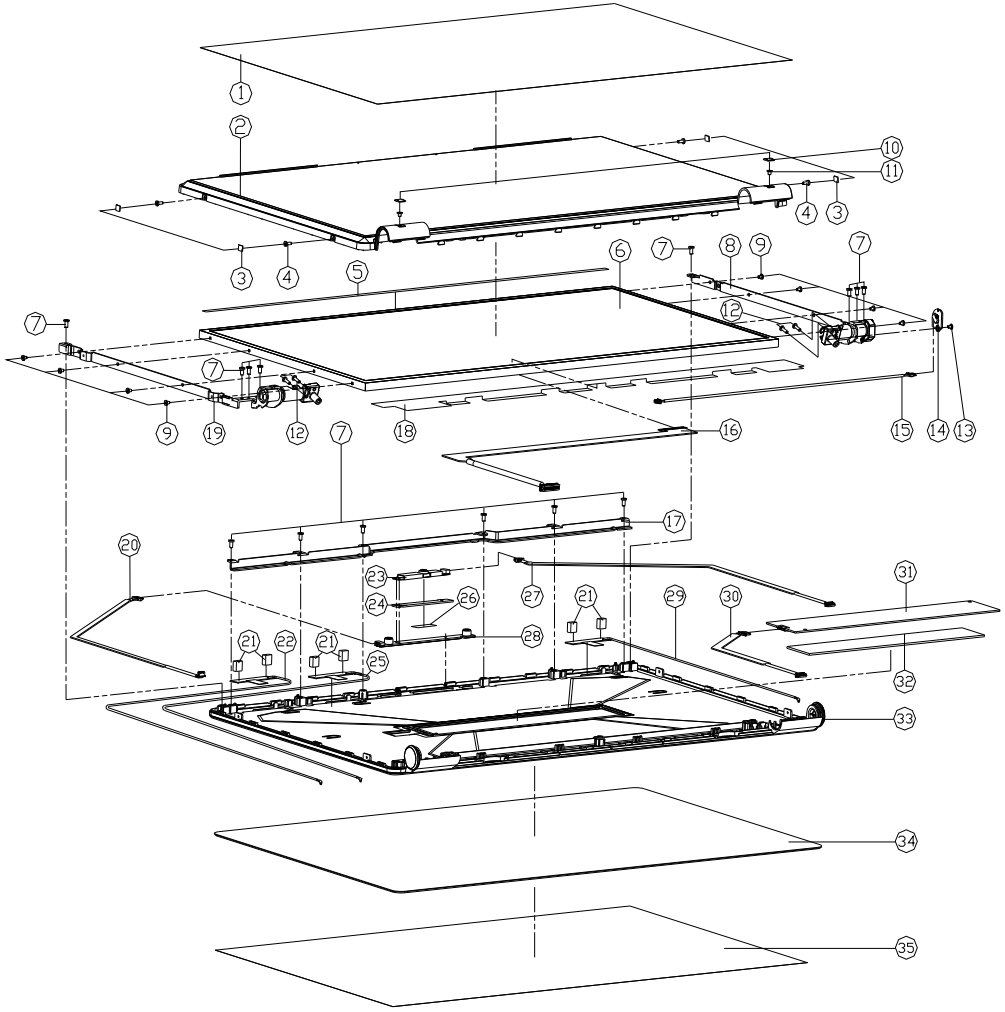

ITEM	PART NAME	PART NO	REMARK
1	LCD FRONT COVER PROTECT MYLAR PET M980NU PRE&G	6-40-M9801-050	
2	LCD FRONT COVER MODULE X8100	6-39-X8101-011	
3	LCD SCREW MYLAR M980NU	6-40-M9801-021	
4	SCREW M2*5L K1 NI ICT NY	6-35-B1120-5R0	
5	MYLAR (415*5*0.25T,BLACK) X8100	6-40-00151-Z65	
6	LCD 18.4" FHD CHINE1 N184HG-L12 GLARE TYPE 63MM QLED	6-50-PB263-D00	
7	SCREW M2.5*5L KI BK/Z ICT NY	6-35-B6125-5RA	
8	LCD HINGE R (SECC+S50C) X8100	6-33-X8101-010	
9	SCREW M2*3L K1 NI ICT NY	6-35-B1120-3RA	
10	HINGE CAP RUBBER SILICONE 80 M980NU	6-47-M9801-020	
11	SCREW M2.5*3L F NI ICT NY	6-35-21125-3R0	
12	SCREW M2.5*8L KI BK/Z NY ICT	6-35-B6125-8R0	
13	SCREW M2*3L K1 NI ICT NY (DD=#4.5,DT=0.4)	6-35-B1120-3RE	
14	PWR BUTTON BOARD V2.0 P180HM	6-77-P180W-D02	
15	WIRE CABLE FOR M/B TO POWER-BOTTON 3P M980NU	6-43-M9800-020	
16	WIRE CABLE 40PIN M/B TO LVDS FOR P180HM&L/YD	6-43-P1801-011-A	
17	LCD BRACKET TOP SECC M980NU	6-33-M9801-011	
18	MYLAR (415MM*20MM)(NC T-NO120/34) CHANGE LEFT X8100	6-40-00151-Z67	
19	LCD HINGE L (SECC+S50C) X8100	6-33-X8101-020	
20	WIRE CABLE FOR M/B TO DIG-MIC 4P M980NU V2.0	6-43-M9804-011	
21	ANTENNA SPONGE (8*7*4) (SPONGE+3M9448) M980NU	6-47-0019A-080	
22	ANTENNA WIMAX 2.4G/3.7G/5G PCB WM 515MM X8100	6-23-7X810-010	
23	UVC CAMERA BISON FIX BA2R05XI-100 2M HDMA2050 P50HM	6-88-X510C-4900	
24	CCD PRON X8100	6-40-X810T-010	
25	ANTENNA WIMAX 2.4G/3.7G/5G PCB, WM-3, 565MM X8100	6-23-7X810-030	
26	CCD AL FIOL(20*10*0.1) M815L	6-47-M815C-010	
27	WIRE CABLE FOR M/B TO CCD 5P M980NU V2.0	6-43-M980T-021	
28	DIGITAL-MIC MODULE BK-A02 FOR M980NU (PRESS)	6-23-EM980-010-1	
29	ANTENNA WIMAX 2.4G/3.7G/5G PCB, WM-2, 769MM X8100	6-23-7X810-020	
30	WIRE CABLE FOR M/B TO LOGO-LIGHT 6P M980NU	6-43-M9800-031	
31	LOGO LED BOARD V2.0 P180HM	6-77-P1803-D02	
32	LIGHT GUIDE FOR LCD BACK COVER M980NU	6-42-M9801-080	
33	LCD BACK COVER MODULE (CHANGE) M980NU	6-39-M9801-024	
34	中性 LOGO PANA FOR LCD BACK COVER NR200 M980NU	6-42-M9801-032	
35	LCD PROTECT MYLAR(PET+3M8915) M980NU	6-40-M9801-040	

Mainboard

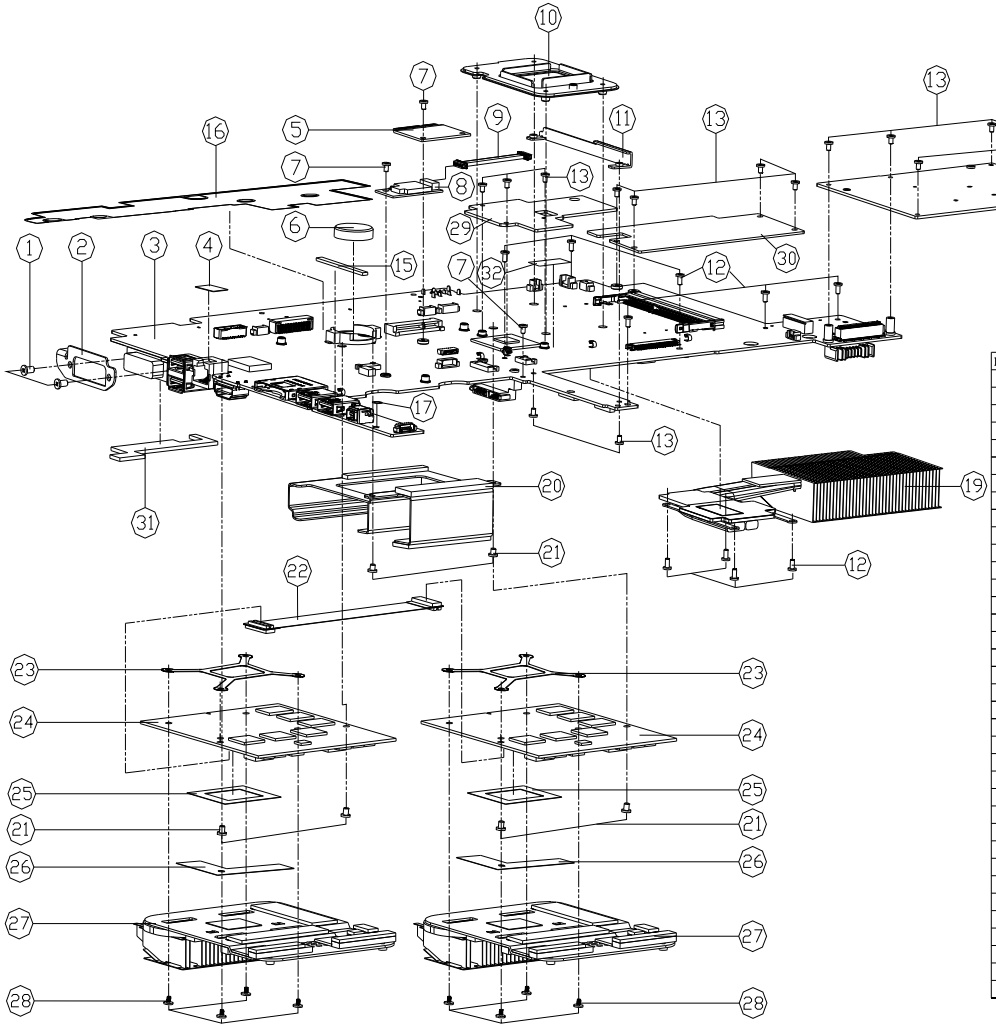

ITEM	PART NAME	PART NO	REMARK
1	SCREW 4-40*5L K NI ACT NY	6-35-B1304-5R0	
2	MB DVI BKT SECC M980NU	6-33-M980S-021	
3	MAIN BOARD V3.0A P180HM	6-77-P1800-D03A	
4	MYLAR FOR RJ45 (PC870+G9000) X8100	6-40-X810S-040	
5	[illegible]	6-88-M77C2-4220	(OPTION)
5	[illegible]	6-88-C555F-7001	(OPTION)
5	[illegible]	6-88-P170F-4200	(OPTION)
5	[illegible]	6-88-C555F-5300	(OPTION)
5	[illegible]	6-88-P170F-4210	(OPTION)
6	BATTERY 3V 220MA BBBCR2032B (KTS)	6-23-6A2B2-030	(OPTION)
7	SCREW M2*3L K1 NI ICT NY	6-35-B1120-3RA	
8	[illegible]	6-88-M77C5-5300	
9	WIRE CABLE 6PIN M/B TO 8PIN BLUETOOTH FOR M980NU V1A	6-43-M980B-010	
10	CPU SUPPORT MODULE SECC P180HM	6-33-P180S-101	
11	BRACKET FOR MB SECC P180HM	6-33-P180S-010	
12	SCREW M2.5*5L K1 BK/Z ICT NY	6-35-B6125-5RA	
13	SCREW M2*3L K1 NI ICT NY (OD=#4.5,DT=0.4)	6-35-B1120-3RE	
14	DUMMY NEW CARD PC+ABS TN120R (共用件)	6-42-T12R3-011-2	
15	[illegible]	6-47-00190-451	
16	MYLAR CU FOIL FOR MB (199.3*65.2*0.05) P180HM	6-40-P180S-031	
17	WASHER AL FOIL(Φ6*Φ3*H0.25 MM)	6-37-02000-602	
18	EXPRESS CARD BOARD V2.0 P180HM	6-77-P1809-D03	
19	CPU HEATSINK MODULE P180HM	6-31-P180N-102	
20	MB VGA BKT MODULE (SECC+SL1C1C1N60+G4000) P180HM	6-33-P180S-201	ONLY FOR ONE VAG
21	SCREW M2.5*3L K1 BZ ICT NY-	6-35-B6125-3R0	
22	FPC CABLE FOR VGA CARD ASP NY(MA) 100 VGA SL1 (C1N)+E3200+V0 X7200	6-43-X7200-070	ONLY FOR TWO VAG
23	VGA SUPPORTER SUS430 X7200	6-33-X720S-040	
24	VGA [illegible]	6-77-W860L-112-J	(OPTION)
25	VGA CHIP MYLAR FOR N11C-GS W860CU	6-40-W860S-060	
26	MYLAR FOR VGA SL1 M980NU(XCHANGE)	6-40-M9800-011	ONLY FOR TWO VAG
27	VGA HEATSINK MODULE P180HM	6-31-P180N-201	
28	SCREW M1.6*3.5L K(T=1.2 D=4.5) BZ ICT NY	6-35-B2116-3R5	
29	SOUTHBRIDGE HEATSINK MODULE P180HM	6-31-P180N-301	
30	CPU FIN PLATE AL1050 P180HM	6-33-P1803-020	
31	MB BTM SPONGE SM55 65*22*6.5 P180HM	6-47-0019A-653	
32	TAPE MYLAR TRANSPARENT (20*10*0.05) P180HM	6-40-P1803-020	

Figure A - 5
Mainboard

DVD

Figure A - 6
DVD

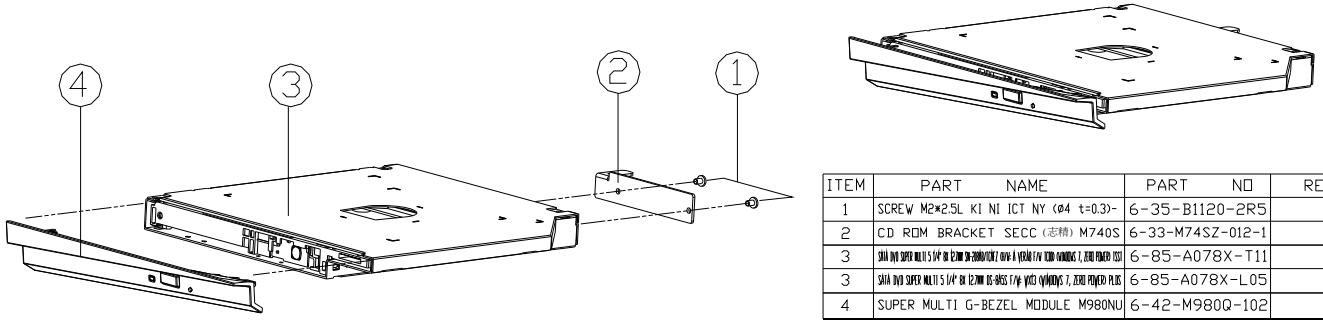

ITEM	PART NAME	PART NO	REMARK
1	SCREW M2×2.5L KI NI ICT NY (Φ4 t=0.3)-	6-35-B1120-2R5	
2	CD ROM BRACKET SECC (志精) M740S	6-33-M74SZ-012-1	
3	SATA DVD SUPER MULTI 5 1/4" 8X 12.7MM SN-208BB/CDR7 OUY-A VERAI F/W TOSHIBA WINDOWS 7, ZERO POWER PLUS	6-85-A078X-T11	
3	SATA DVD SUPER MULTI 5 1/4" 8X 12.7MM DS-8H5S F/W WCD WINDOWS 7, ZERO POWER PLUS	6-85-A078X-L05	
4	SUPER MULTI G-BEZEL MODULE M980NU	6-42-M980Q-102	

COMBO

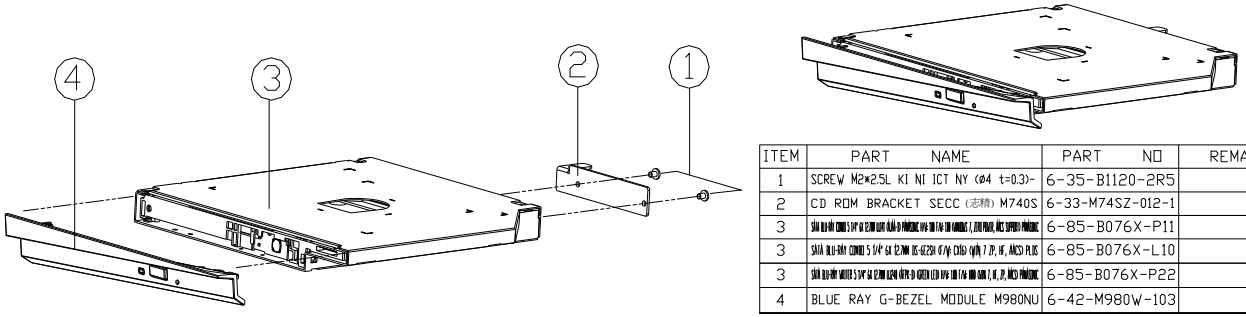

ITEM	PART NAME	PART NO	REMARK
1	SCREW M2*2.5L KI NI ICT NY (Ø4 t=0.3)-	6-35-B1120-2R5	
2	CD ROM BRACKET SECC (志精) M740S	6-33-M74SZ-012-1	
3	SÁNA BLU-RAY COMBO 5 1/4" SA 12.7MM UDR-QLAA-D PANASONIC UVA-3B (TA) (3B KAMEDAS 2, DVD PRAVIC, ARCS SUPPER) PANASONIC	6-85-B076X-P11	
3	SÁNA BLU-RAY COMBO 5 1/4" SA 12.7MM DS-42ZSH (C/Ng CHSU) (qUN 7 ZP, HF, ARCS) PLDS	6-85-B076X-L10	
3	SÁNA BLU-RAY WRITER 5 1/4" SA 12.7MM BZ240 (UYH-D GREEN LED) UVA-1B (TA) (BB GAM 2, HF, ZP, ARCS) PANASONIC	6-85-B076X-P22	
4	BLUE RAY G-BEZEL MODULE M980NU	6-42-M980W-103	

Figure A - 7
COMBO

Appendix B: Schematic Diagrams

This appendix has circuit diagrams of the ***P180HM*** notebook's PCB's. The following table indicates where to find the appropriate schematic diagram.

Diagram - Page	Diagram - Page	Diagram - Page
System Block Diagram - Page B - 2	*CPT 6/9 GPIO, CPU - Page B - 21*	*PWR VCORE-1 - Page B - 40*
Sandy Bridge 1/7 DMI, PEG - Page B - 3	*CPT 7/9 PWR - Page B - 22*	*PWR VCORE-2 - Page B - 41*
Sandy Bridge 2/7 CLK, MISC - Page B - 4	*CPT 8/9 PWR - Page B - 23*	*PWR 1.05VS/ 1.05VS CPU - Page B - 42*
Sandy Bridge 3/7 DDR3I - Page B - 5	*SATA HDD CONN, Re- Driver - Page B - 24*	*PWR 0.85VS - Page B - 43*
Sandy Bridge 4/7 Power - Page B - 6	*CPT, DVI - Page B - 25*	*PWR 1.5V/ VTT MEM - Page B - 44*
Sandy Bridge 5/7 GFX PWR - Page B - 7	*LED PANEL - Page B - 26*	*PWR 1.8VS/ 1.5VS/ 1.5VS CPU - Page B - 45*
Sandy Bridge 6/7 - Page B - 8	*FAN CONTROL - Page B - 27*	*PWR VDD3/ VDD5 - Page B - 46*
Sandy Bridge 7/7 RSVD - Page B - 9	*HDMI, RJ45 CONN - Page B - 28*	*PWR CHARGER, DC IN - Page B - 47*
DDR3 CHA SO-DIMM 0 - Page B - 10	*ODD, CCD, USB 2.0, BT, TPM - Page B - 29*	*SCREW HOLE - Page B - 48*
DDR3 CHA SO-DIMM 1 - Page B - 11	*CODEC, DMIC - Page B - 30*	*EXPRESS CARD BOARD - Page B - 49*
DDR3 CHB SO-DIMM 0 - Page B - 12	*AUDIO AMP, SPK - Page B - 31*	*ISDB-T CARD/ TV CARD - Page B - 50*
DDR3 CHB SO-DIMM 1 - Page B - 13	*WLAN, TV, Charger USB - Page B - 32*	*AUDIO BOARD - Page B - 51*
MXM 3.0 MASTER - Page B - 14	*LAN, Card Reader - Page B - 33*	*POWER BUTTON BOARD - Page B - 52*
MXM 3.0 SLAVE - Page B - 15	*IEEE 1394 - Page B - 34*	*CLICK & FP BOARD - Page B - 53*
CPT 1/9 HDA, SATA - Page B - 16	*USB 3.0 - Page B - 35*	*GAME KEY BOARD - Page B - 54*
CPT 2/9 PCIE, SMBUS - Page B - 17	*KBC ITE IT8519-BX - Page B - 36*	*CIR BOARD - Page B - 55*
CPT 3/9 DMI, PWRGD - Page B - 18	*SMALL BOARD CONN-A - Page B - 37*	*FINGER BOARD - Page B - 56*
CPT 4/9 LVDS, DDI, 9/9 GND - Page B - 19	*SMALL BOARD CONN-B - Page B - 38*	*POWER ON SEQUENCE - Page B - 57*
CPT 5/9 PCI, USB - Page B - 20	*POWER SYSTEM - Page B - 39*	

Table B - 1
Schematic Diagrams

Version Note

The schematic diagrams in this chapter are based upon version 6-7P-P1808-006. If your mainboard (or other boards) are a later version, please check with the Service Center for updated diagrams (if required).

System Block Diagram

Sheet 1 of 56
System Block Diagram

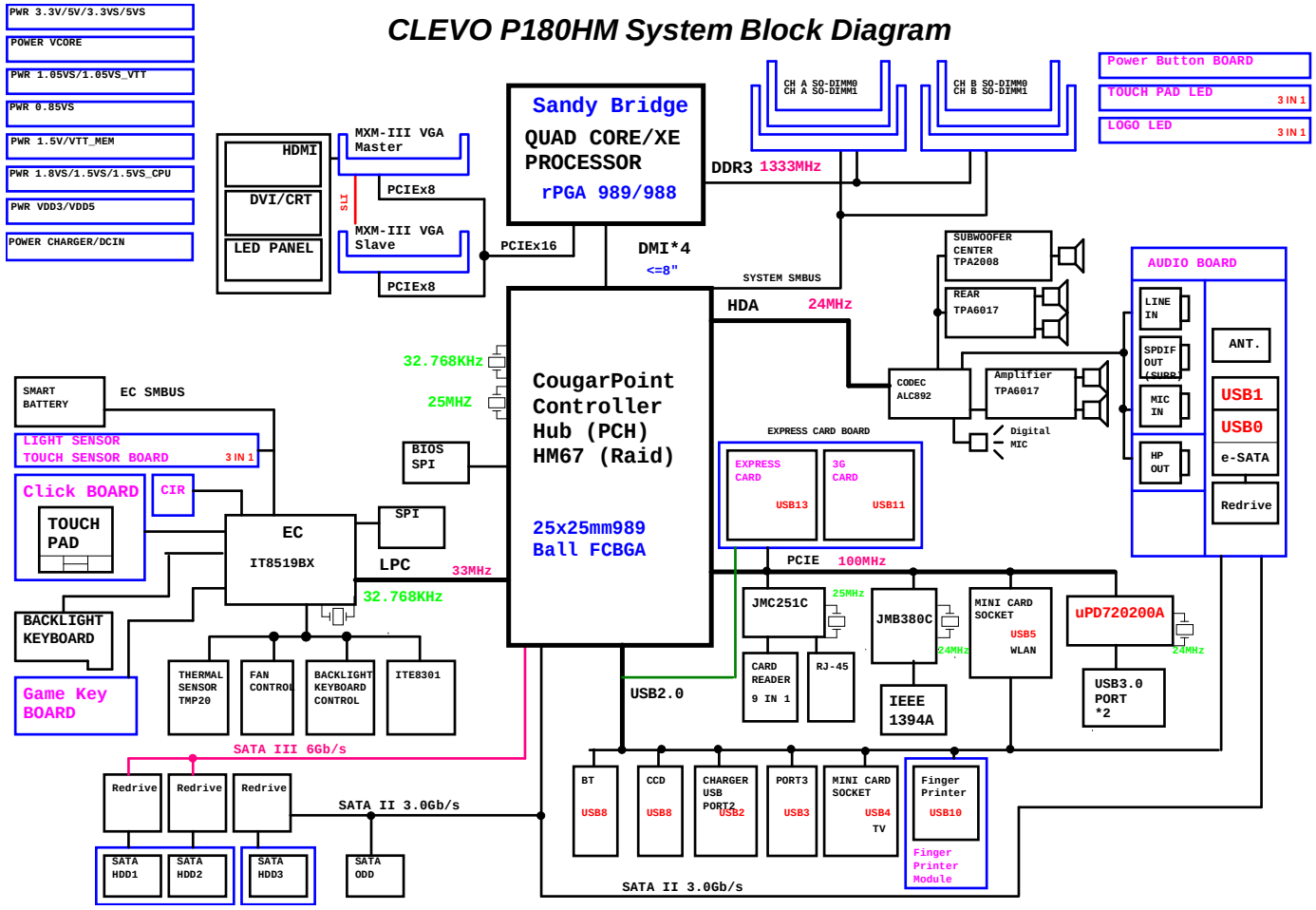

Sandy Bridge 1/7 DMI, PEG

Sandy Bridge PROCESSOR 1/7 (DMI,PEG,FDI)

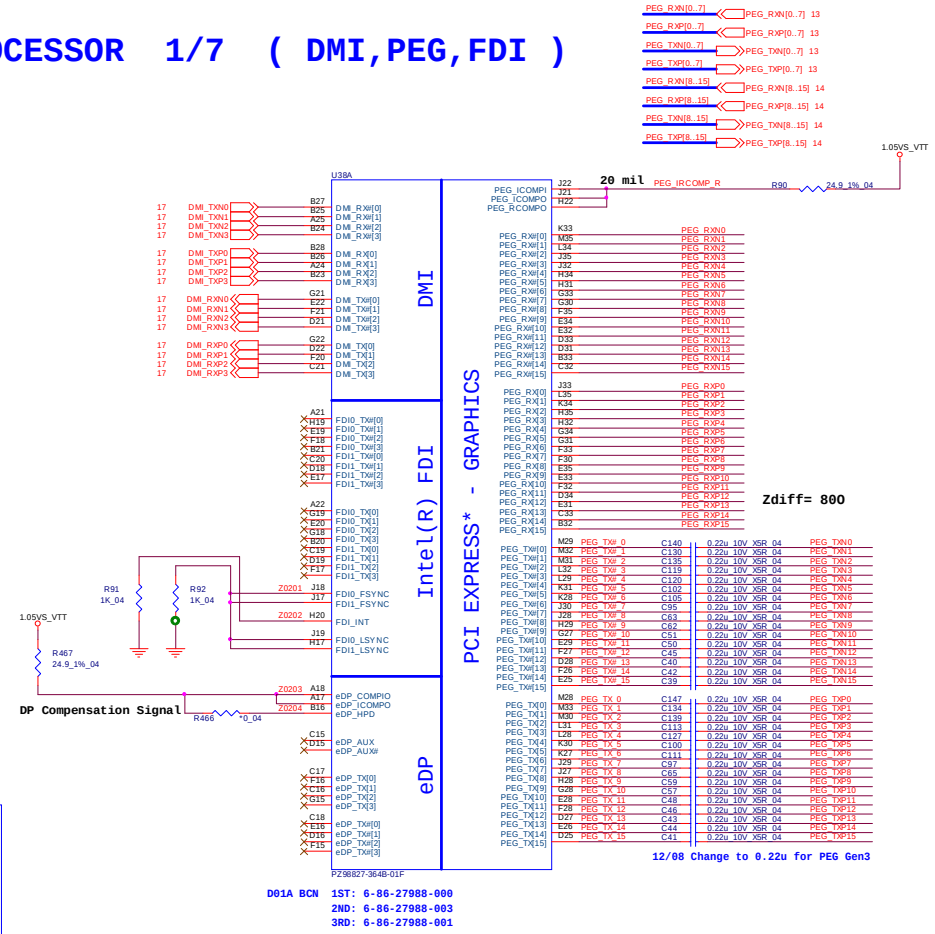

D01A BCN 1ST: 6-86-27988-000
2ND: 6-86-27988-003
3RD: 6-86-27988-001

PEG Compensation Signal

CAD NOTE: PEG_ICOMPI and RCOMPO signals should be shorted and routed with
- max length = 500 mils
- typical impedance = 43 mohms

PEG_ICOMPO signals should be routed with
- max length = 500 mils
- typical impedance = 14.5 mohms

It applies to Auburndale and Clarksfield discrete graphic designs.
If discrete graphic chip is used for Auburndale, VAXG (GFX core) rail can be connected to GND if motherboard only supports discrete graphics and also in a common motherboard design if GFX VR is not stuffed. On the other hand, if the VR is stuffed, VAXG can be left floating in a common motherboard design (GFx VR keeps VAXG from floating).
In addition, FDI_RXN_[7:0] and FDI_RXP_[7:0] can be left floating on the PCH.
FDI_TX[7:0] and FDI_TX#[7:0] can be left floating on the Auburndale.
The GFX_IMON, FDI_FSYNC[0], FDI_FSYNC[1], FDI_LSYNC[0], FDI_LSYNC[1], and FDI_INT signals should be tied to GND (through 1K ? % resistors) in the common motherboard design case. Please not that if these signals are left floating, there are no functional impacts but a small amount of power (~15 mW) maybe wasted. VAXG_SENSE and VSSAXG_SENSE on Auburndale can be left as no connect.
DPLL_REF_SSCLK and DPLL_REF_SSCLK# can be connected to GND on Auburndale directly if motherboard only supports discrete graphics. In a common motherboard design, these pins are driven via PCH (even if Graphics is disabled by BIOS) thus no external termination is required.

CAD NOTE: DP_COMPIO and ICOMPO signals should be shorted near balls and routed with
- typical impedance < 25 mohms

Analog Thermal Sensor

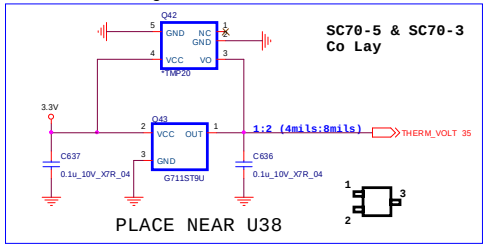

Sheet 2 of 56
Sandy Bridge 1/7
DMI, PEG

B.Schematic Diagrams

Sandy Bridge 2/7 CLK, MISC

Sheet 3 of 56
Sandy Bridge 2/7
CLK, MISC

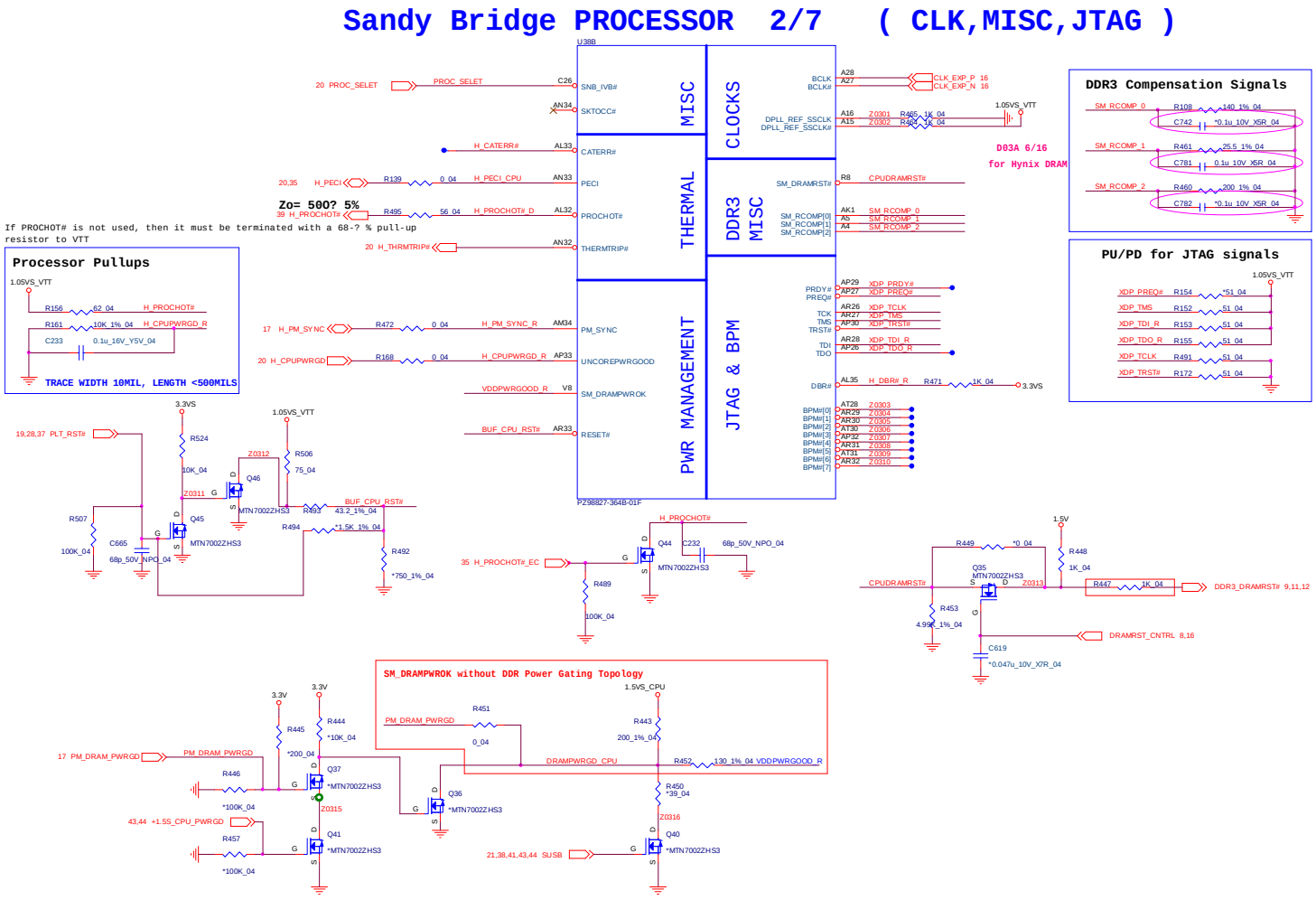

Sandy Bridge 3/7 DDR3I

Sandy Bridge PROCESSOR 3/7 (DDR3)

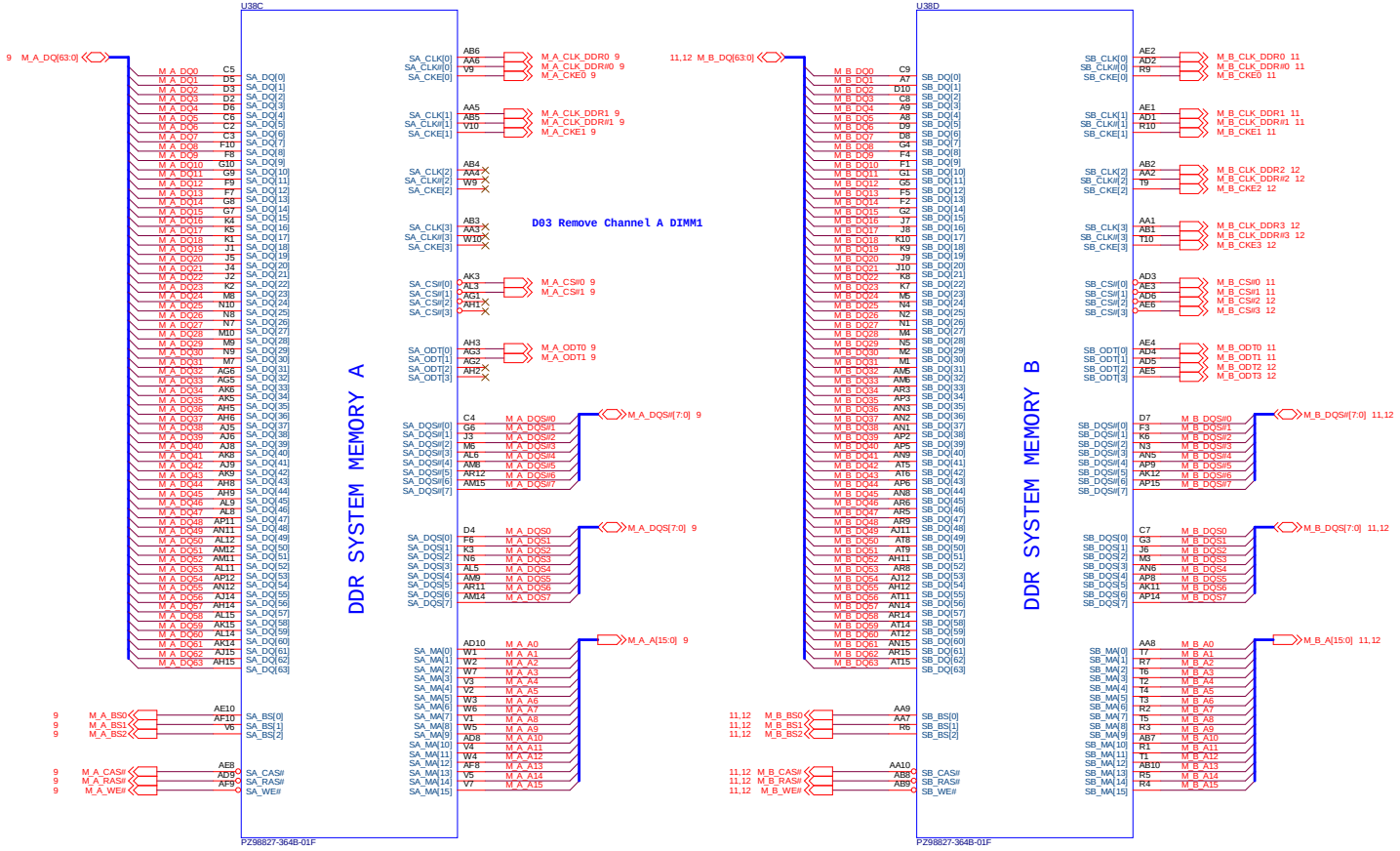

Sheet 4 of 56
Sandy Bridge 3/7
DDR3

Sandy Bridge 4/7 Power

Sheet 5 of 56
Sandy Bridge 4/7 Power

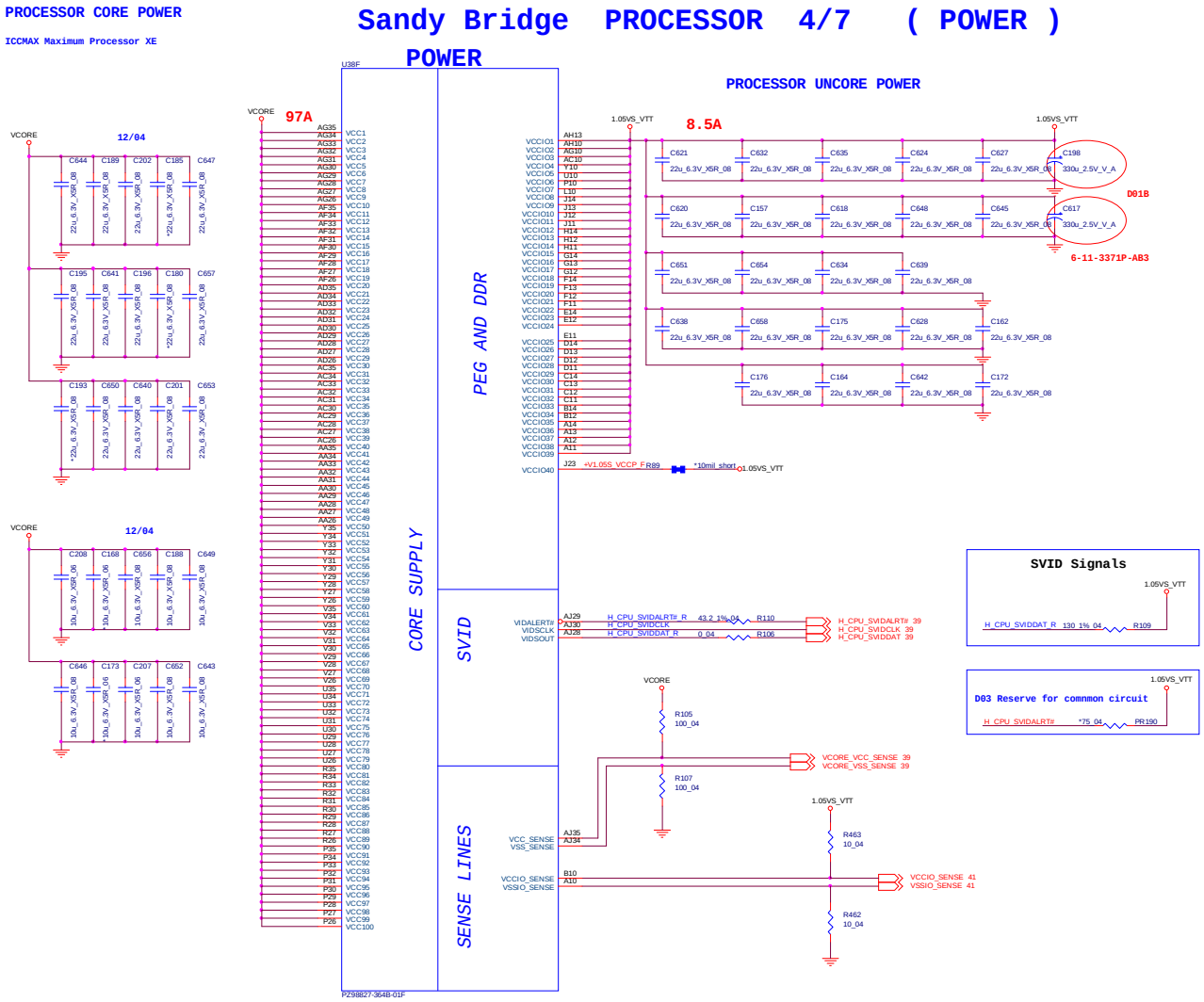

Sandy Bridge 5/7 GFX PWR

Sandy Bridge PROCESSOR 5/7 (GRAPHICS POWER)

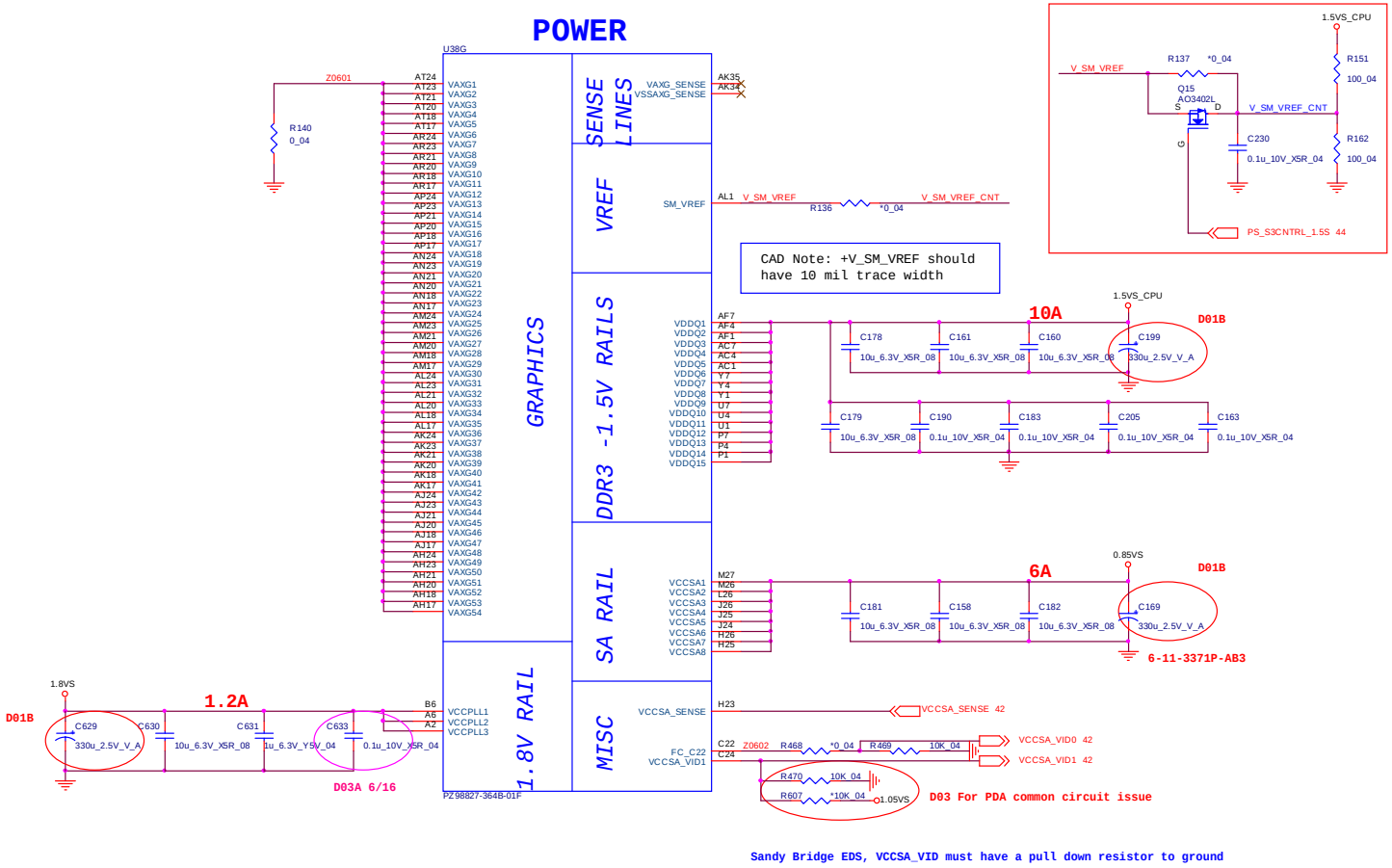

Sandy Bridge EDS, VCCSA_VID must have a pull down resistor to ground

Sheet 6 of 56
Sandy Bridge 5/7
GFX PWR

B.Schematic Diagrams

Sandy Bridge 6/7

Sandy Bridge Processor 6/7 (GND)

Sheet 7 of 56
Sandy Bridge 6/7

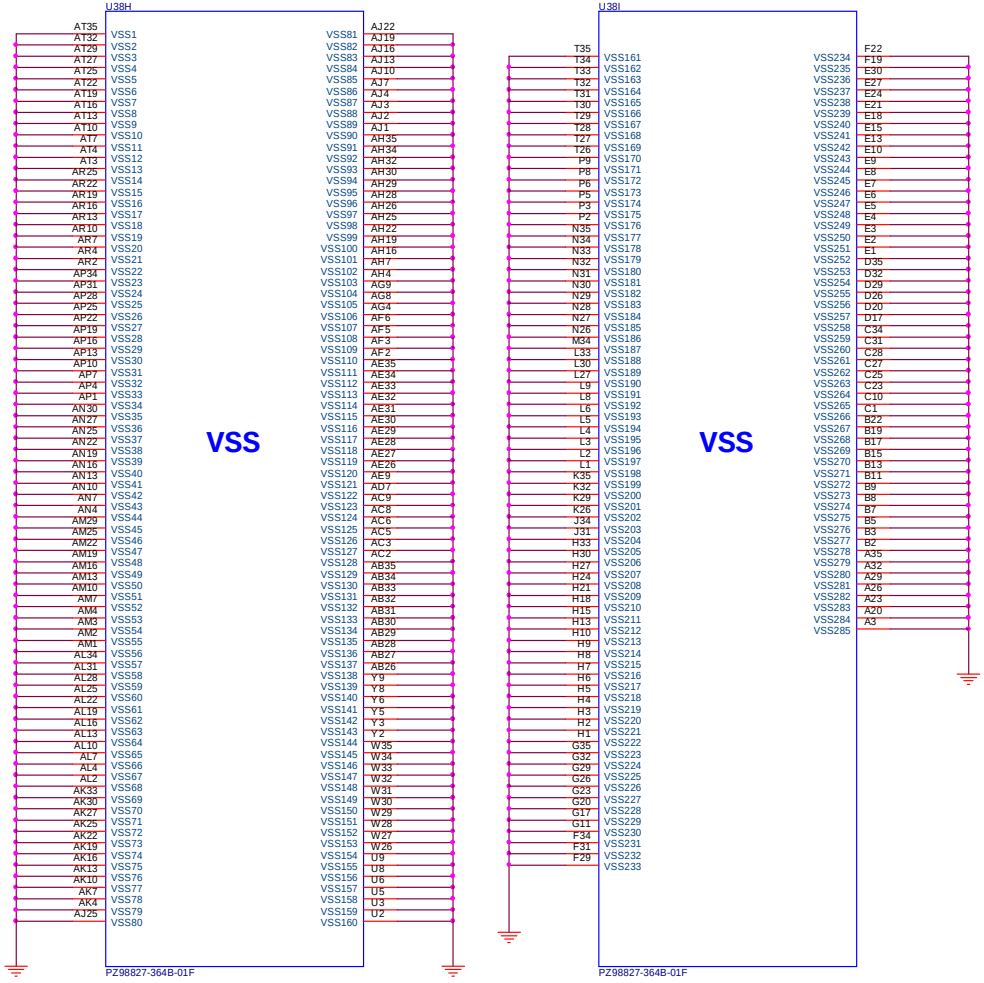

Sandy Bridge 7/7 RSVD

Sandy Bridge Processor 7/7 (RESERVED)

CFG Straps for Processor

PEG Static Lane Reversal - CFG2 is for the 16x	
CFG2	1:(Default) Normal Operation; Lane # definition matches socket pin map definition 0:Lane Reversed

CFG2 R118 *1K_04

Display Port Presence Strap	
CFG4	1:(Default) Disabled; No Physical Display Port attached to Embedded Display Port 0:Enabled; An external Display Port device is connected to the Embedded Display Port

CFG4 R113 *1K_04

PCIE Port Bifurcation Straps	
CFG[6:5]	11: (Default) x16 - Device 1 functions 1 and 2 disabled 10: x8, x8 - Device 1 function 1 enabled ; function 2 disabled 01: Reserved - (Device 1 function 1 disabled ; function 2 enabled) 00: x8,x4,x4 - Device 1 functions 1 and 2 enabled

CFG5 R112 1K_04 **10 = 2 x 8 PCI Express**

CFG6 R119 *1K_04

PEG DEFER TRAINING	
CFG7	1: (Default) PEG Train immediately following xxRESETB de assertion 0: PEG Wait for BIOS for training

CFG7 R133 *1K_04

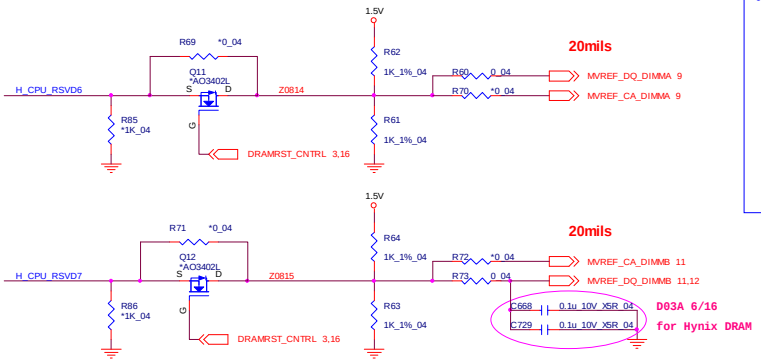

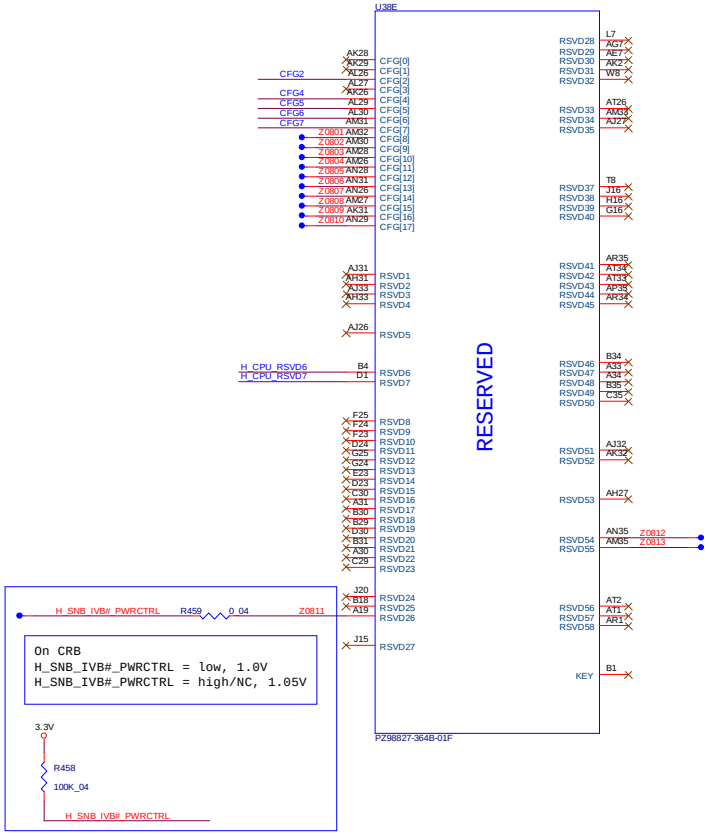

Sheet 8 of 56
Sandy Bridge 7/7 RSVD

B.Schematic Diagrams

DDR3 CHA SO-DIMM 0

Channel A SO-DIMM 0 (Button Side)

Sheet 9 of 56
DDR3 CHA SO-DIMM 0

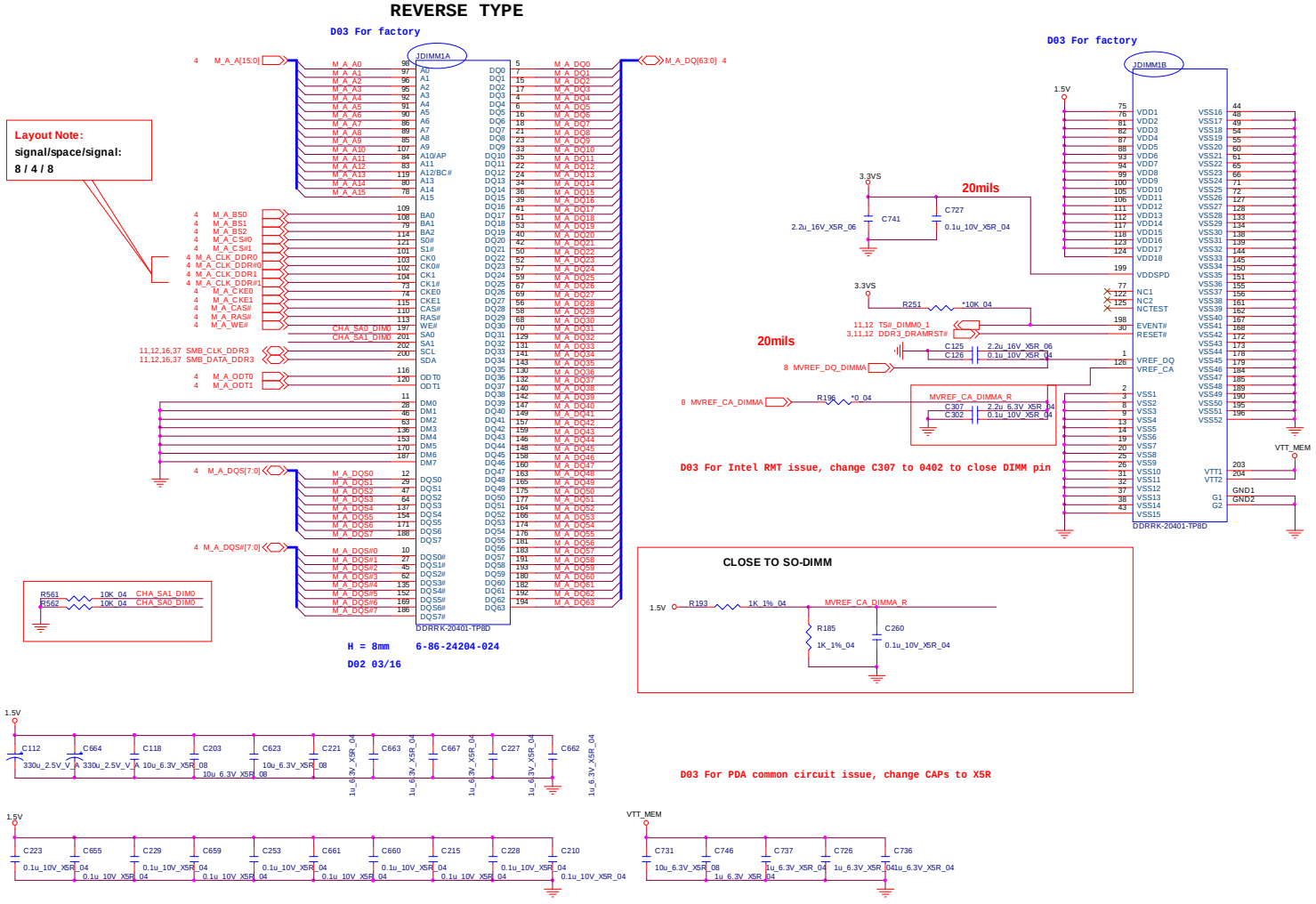

DDR3 CHA SO-DIMM 1

Channel A SO-DIMM 1 (Button Side)

Sheet 10 of 56
DDR3 CHA SO-DIMM 1

D03 Remove Channel A DIMM1

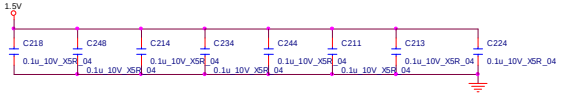

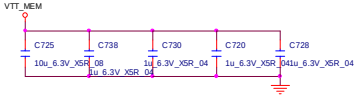

DDR3 CHB SO-DIMM 0

Sheet 11 of 56
DDR3 CHB SO-DIMM 0

Channel B SO-DIMM 0 (Bottom Side)

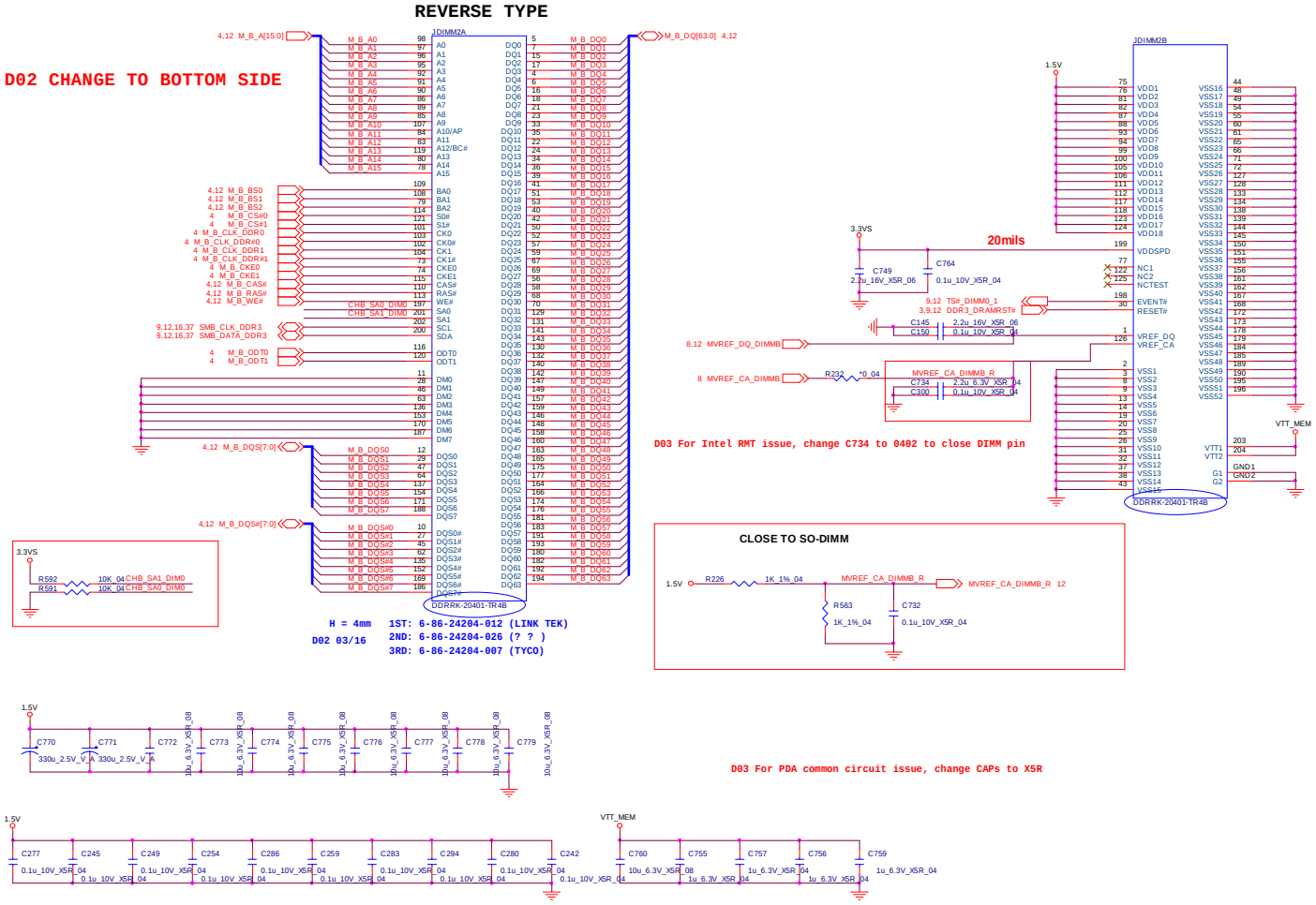

DDR3 CHB SO-DIMM 1

Channel B SO-DIMM 1 (Top Side)

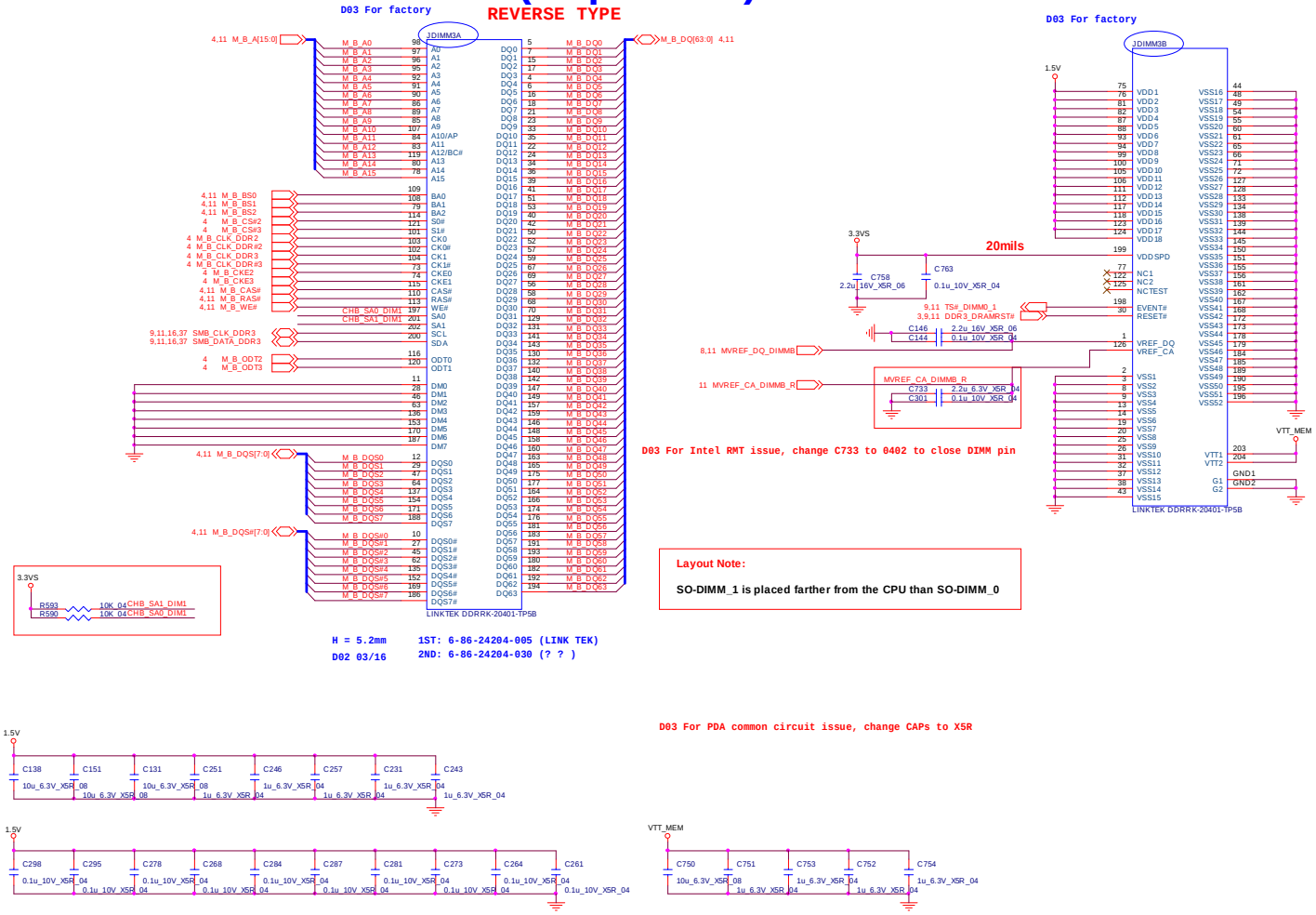

Sheet 12 of 56
PCH 1/8
DDR3 CHB SO-DIMM 1

B.Schematic Diagrams

MXM 3.0 MASTER

Sheet 13 of 56
MXM 3.0 MASTER

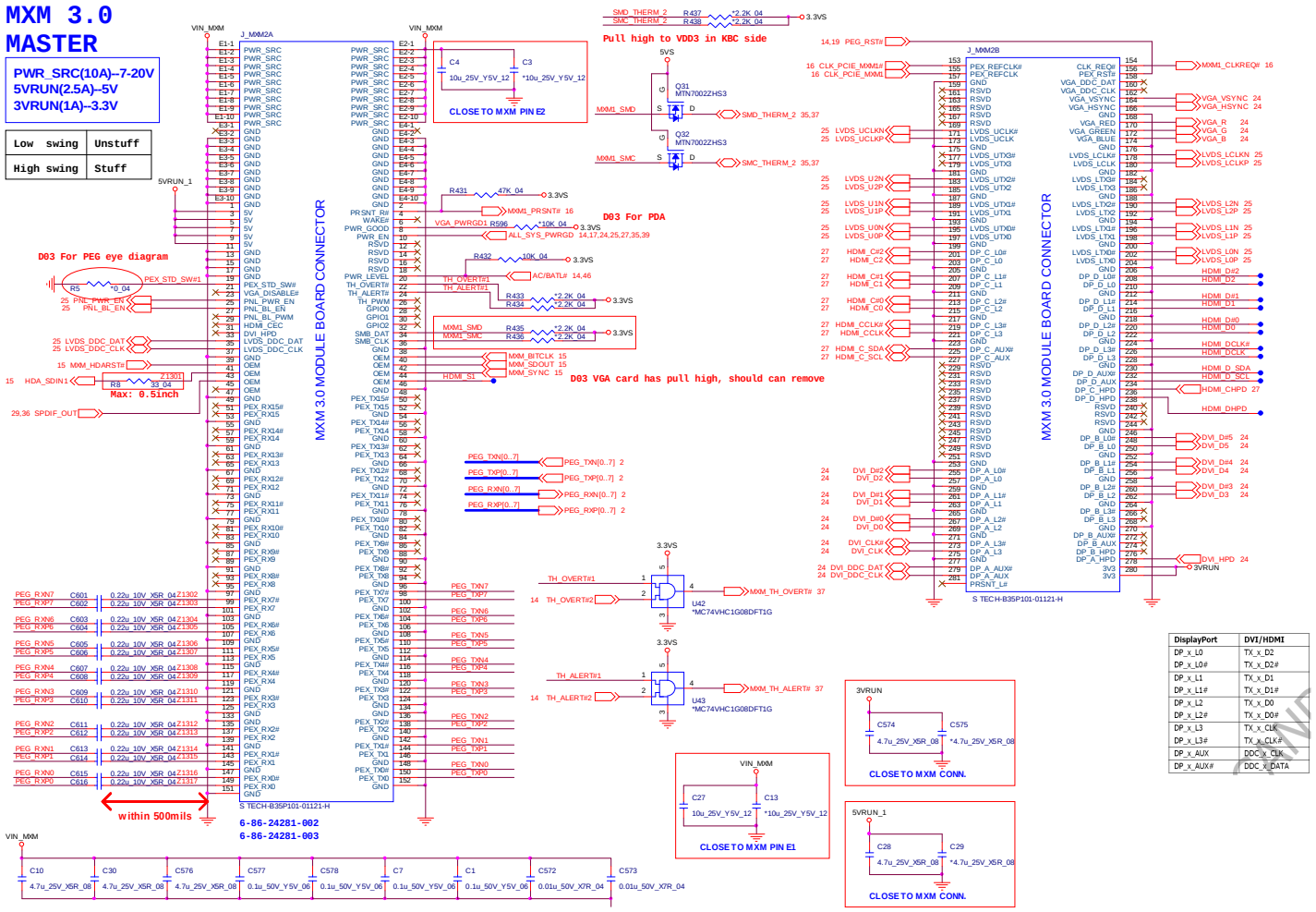

MXM 3.0 SLAVE

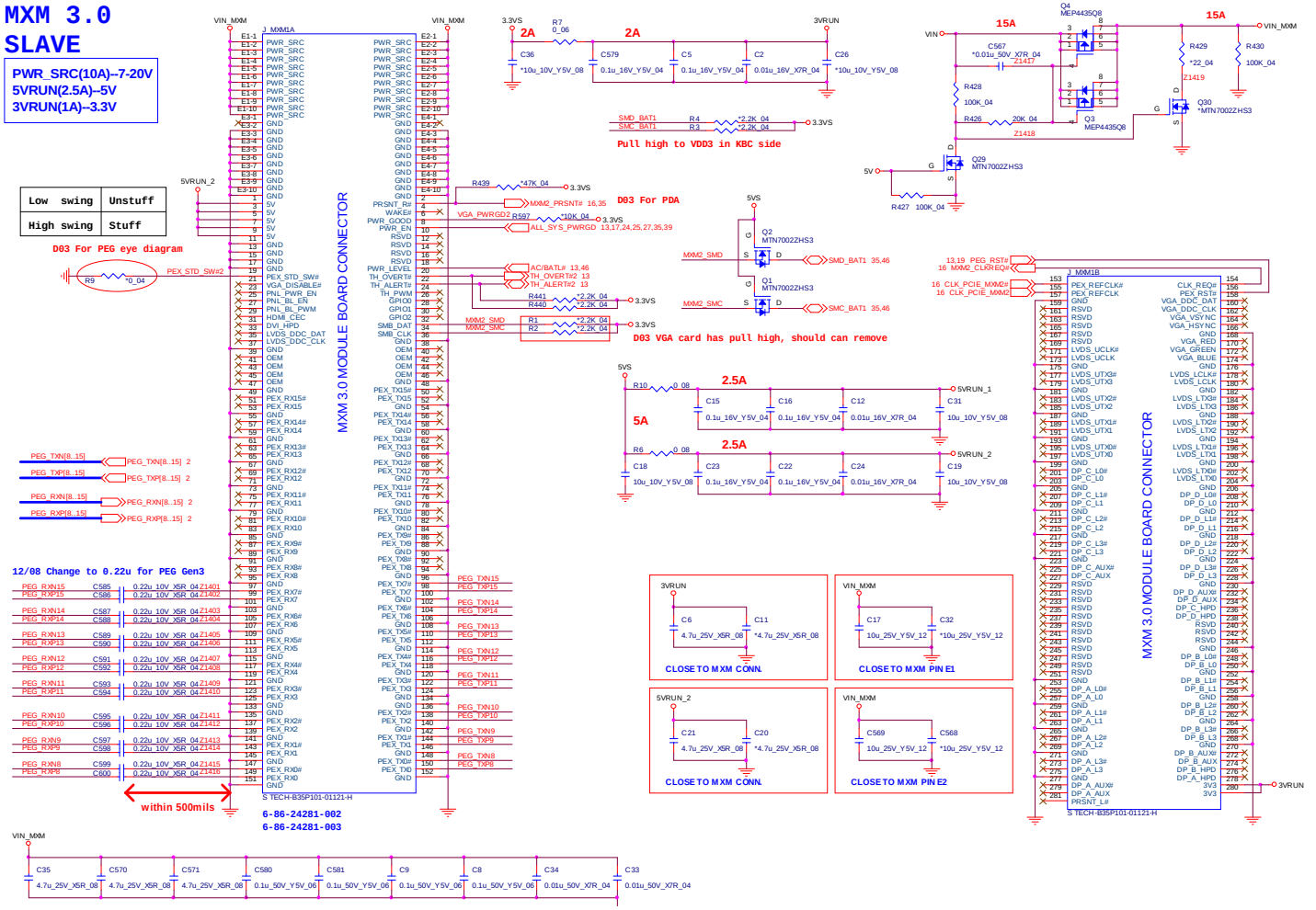

Sheet 14 of 56
PCH 3/8
MXM 3.0 SLAVE

CPT 1/9 HDA, SATA

Sheet 15 of 56
PCH 4/8
CPT 1/9 HDA, SATA

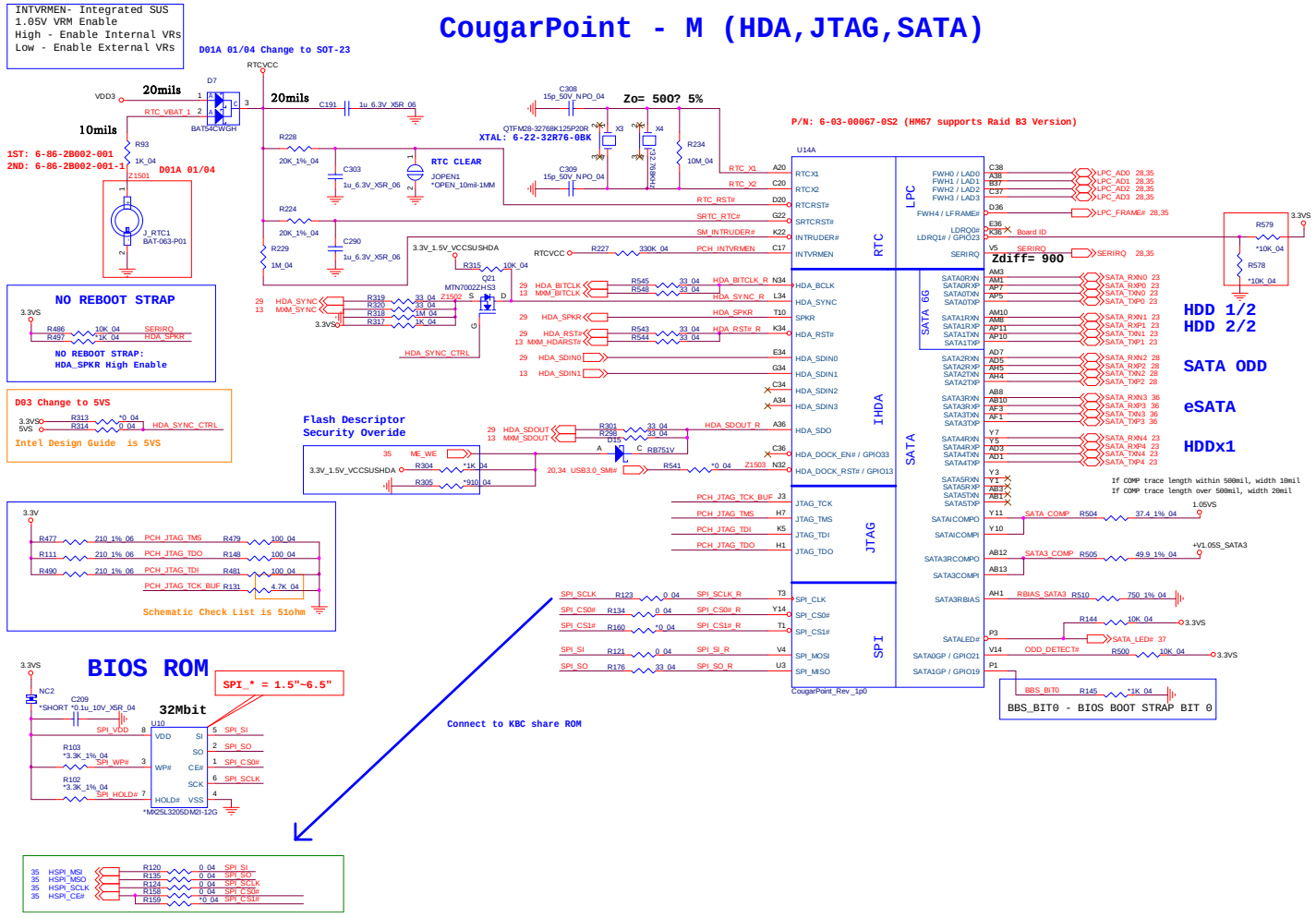

CPT 2/9 PCIE, SMBUS

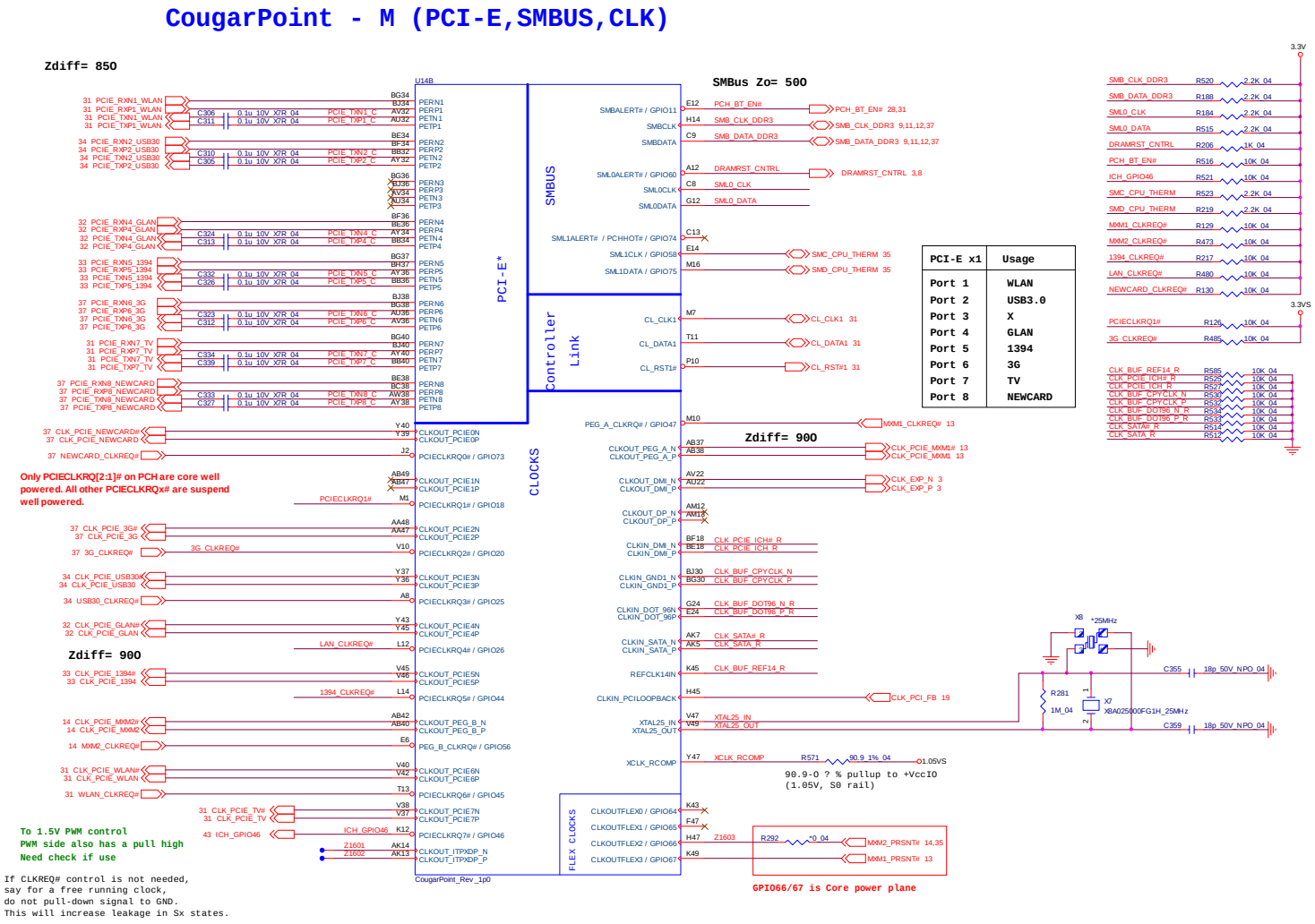

Sheet 16 of 56
CPT 2/9 PCIE, SMBUS

CPT 3/9 DMI, PWRGD

Sheet 17 of 56
CPT 3/9 DMI, PWRGD

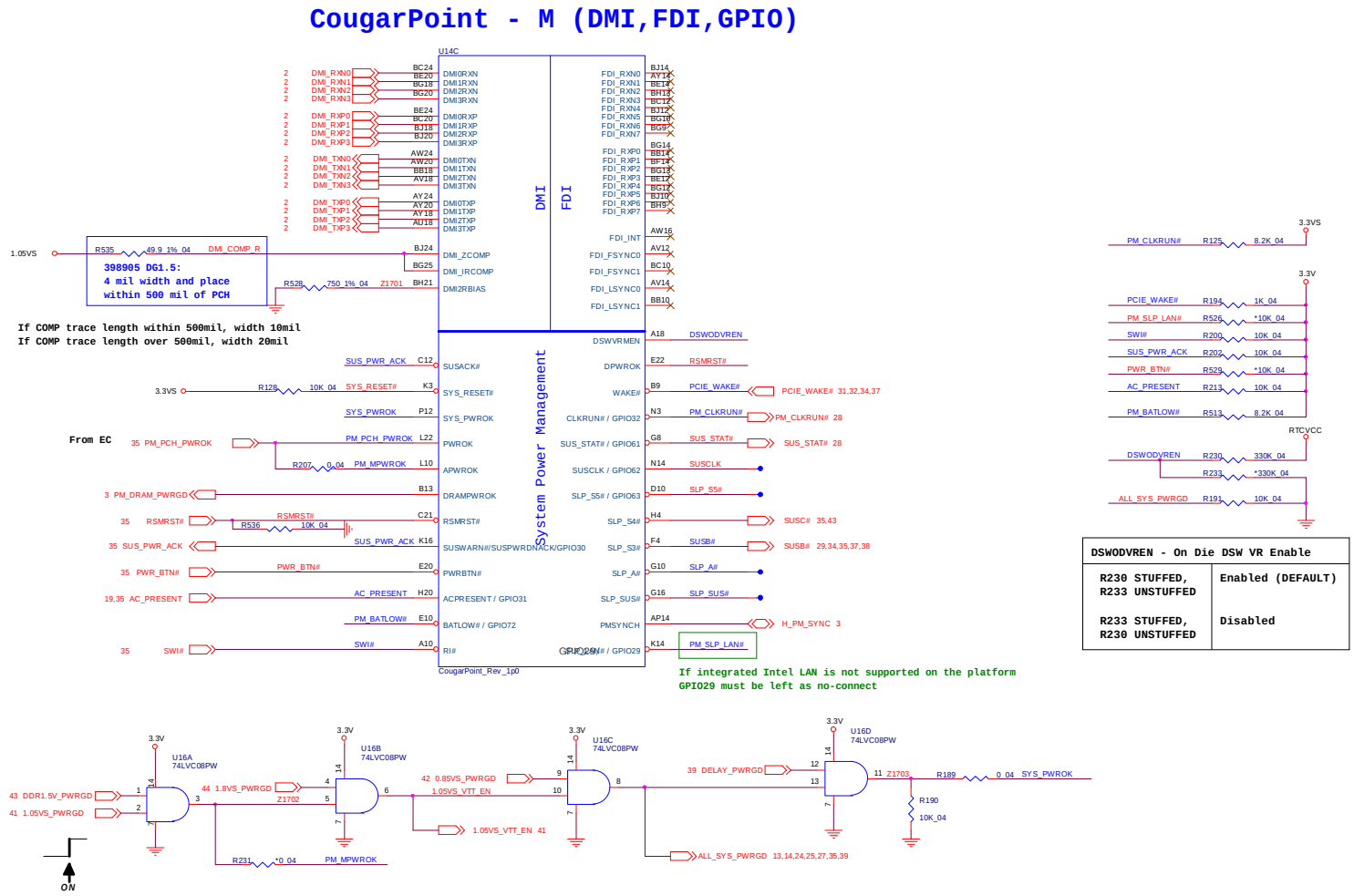

CPT 4/9 LVDS, DDI, 9/9 GND

CougarPoint - M (LVDS,DDI)

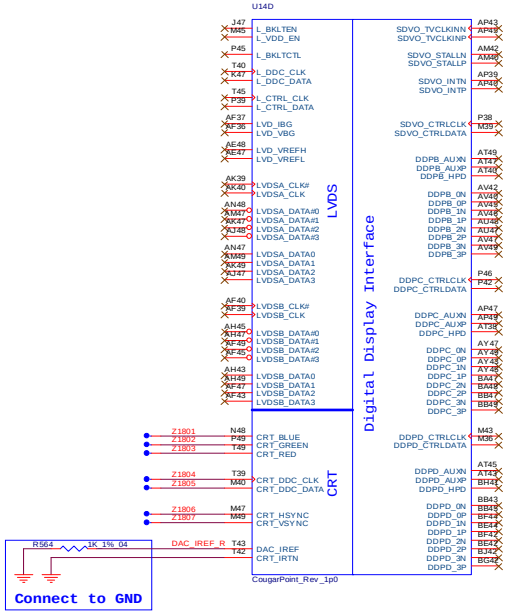

External Graphics (PCH Integrated Graphics Disable)

CougarPoint - M (GND)

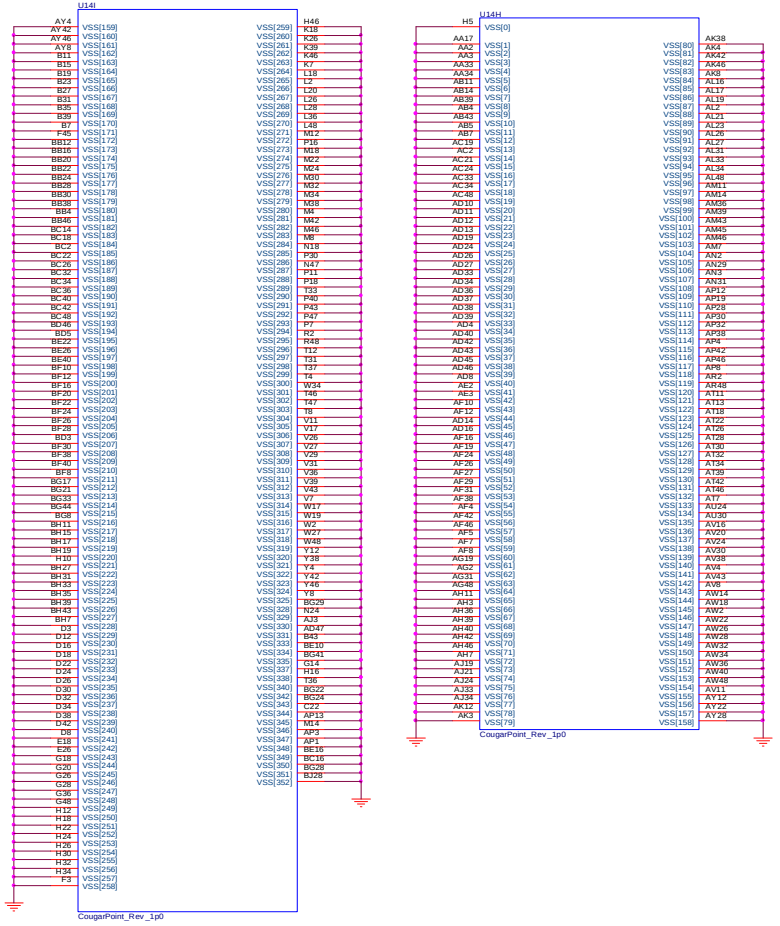

Sheet 18 of 56
CPT 4/9 LVDS, DDI, 9/9 GND

CPT 5/9 PCI, USB

Sheet 19 of 56
CPT 5/9 PCI, USB

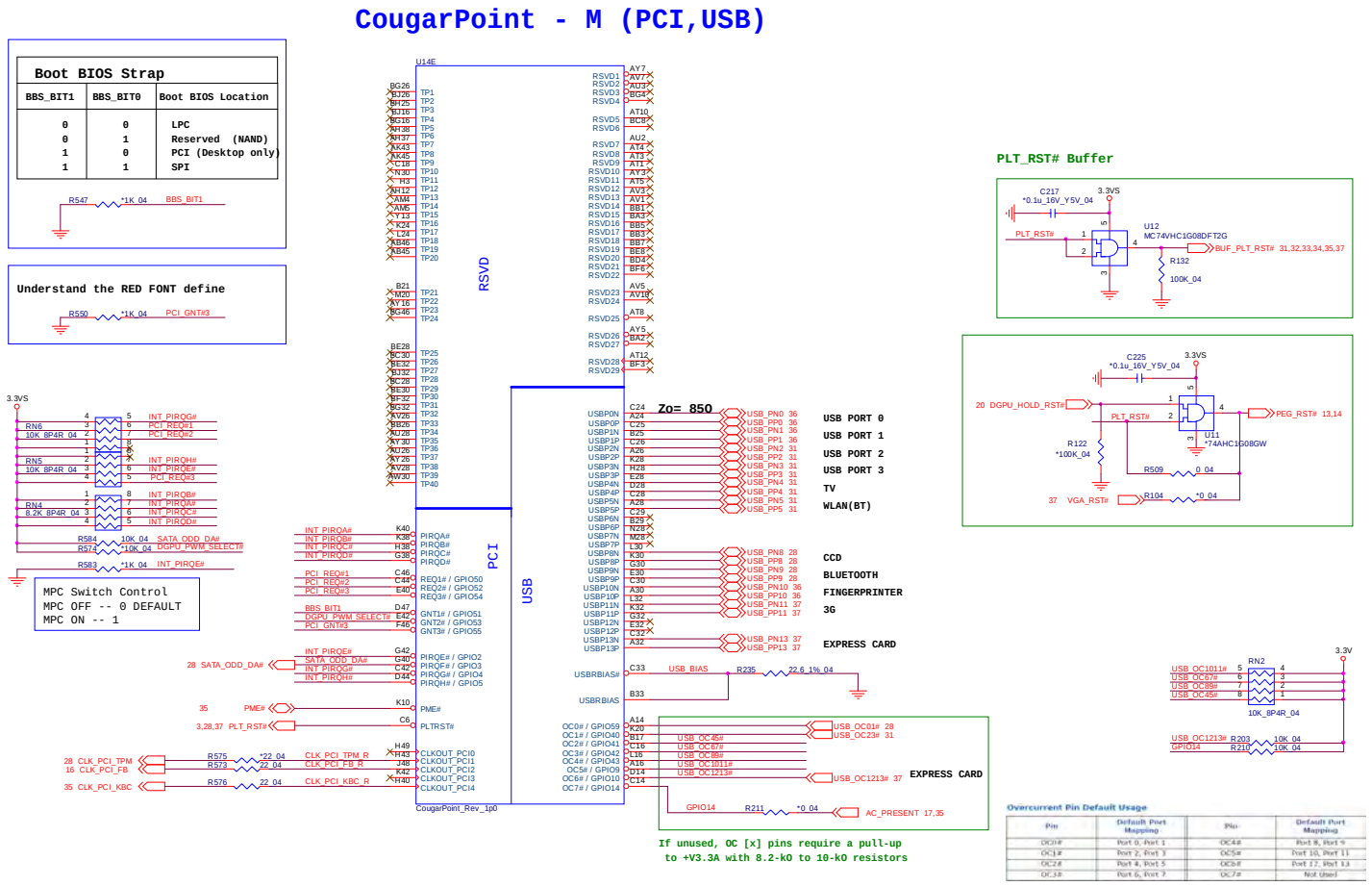

CPT 6/9 GPIO, CPU

CougarPoint - M (GPIO,VSS_NCTF,RSVD)

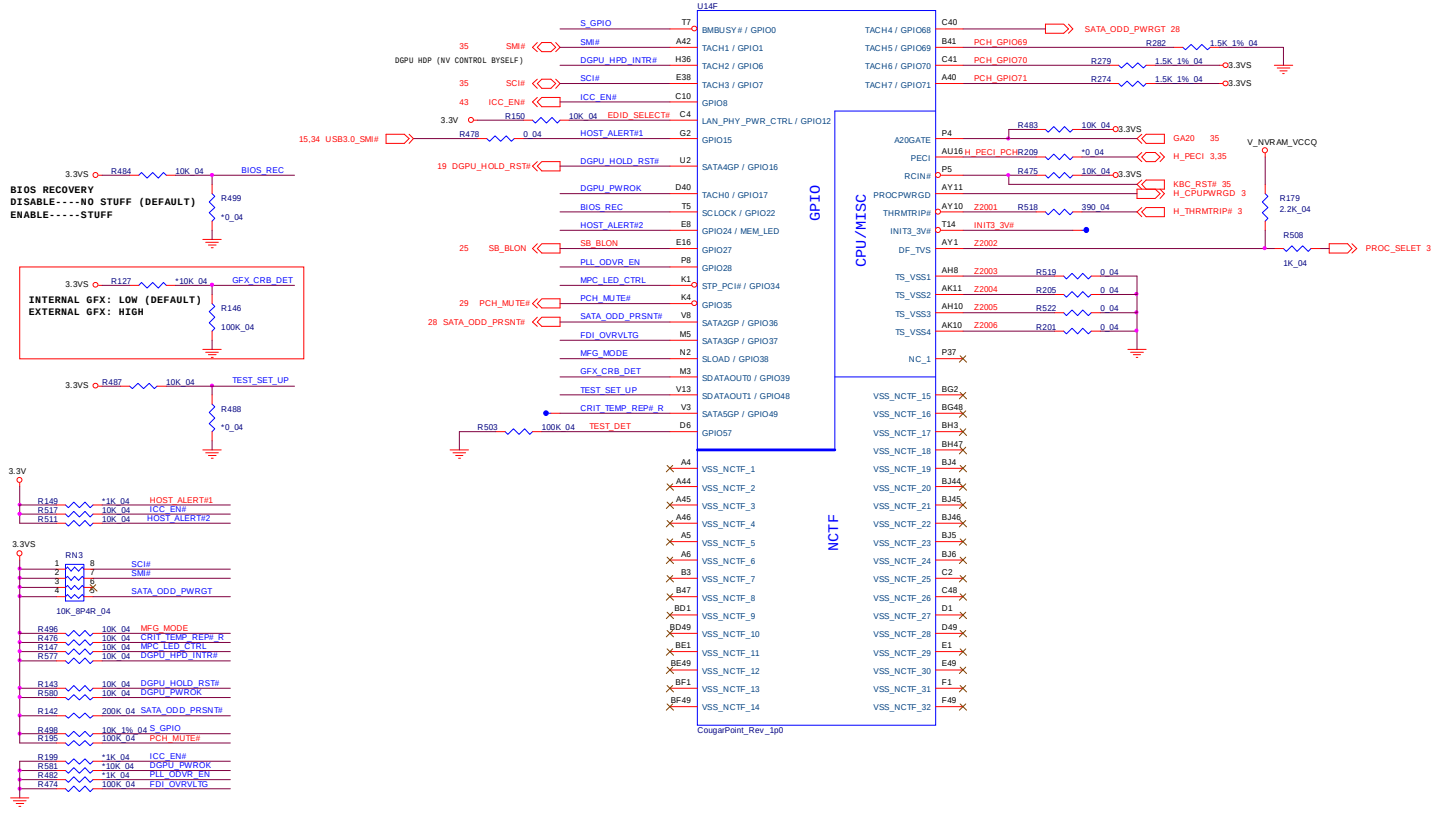

Sheet 20 of 56
CPT 6/9 GPIO, CPU

CPT 7/9 PWR

Sheet 21 of 56
CPT 7/9 PWR

CougarPoint - M (POWER)

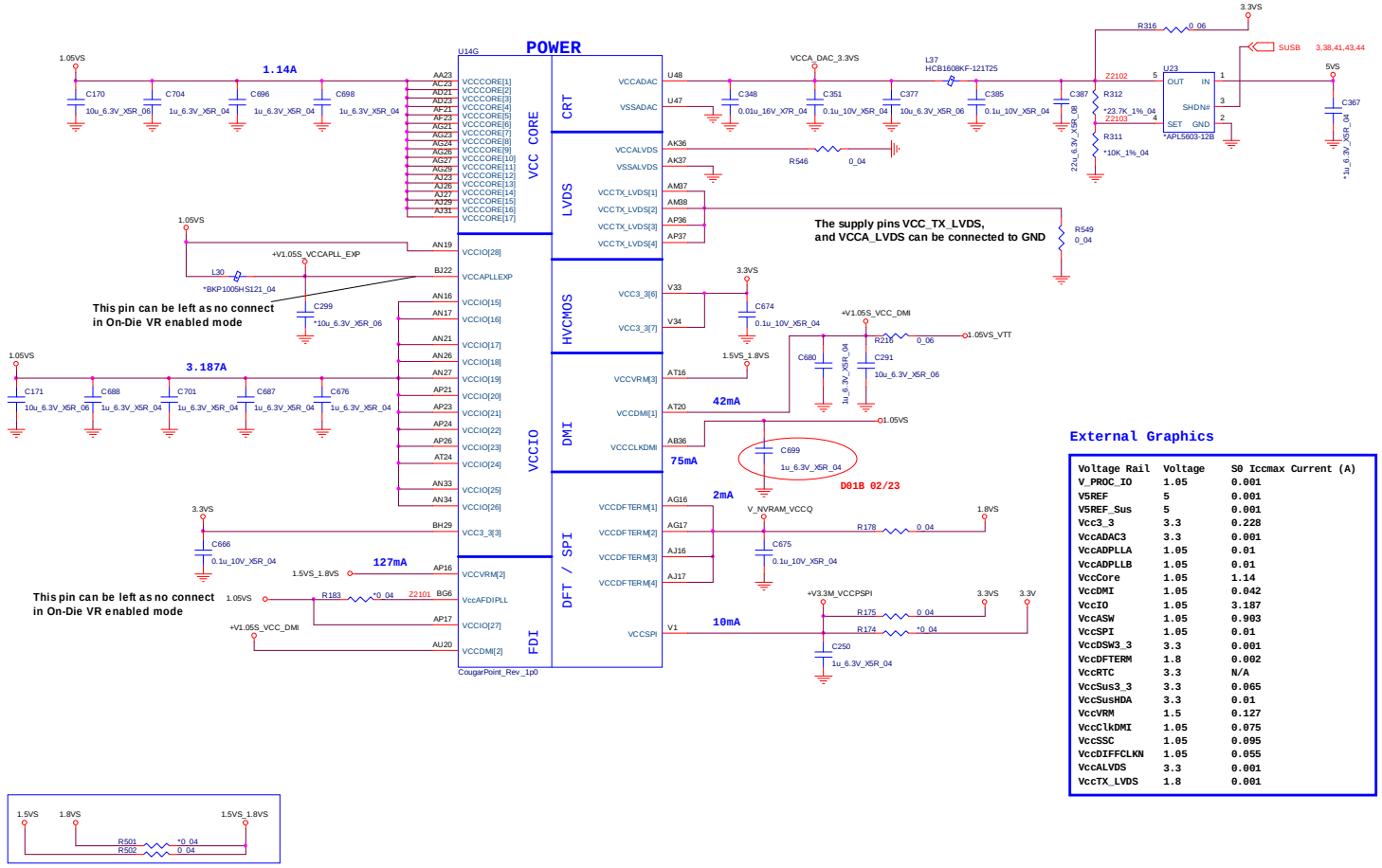

External Graphics

Voltage Rail	Voltage	S0 Iccmax Current (A)
V_PROC_IO	1.05	0.001
V5REF	5	0.001
V5REF_Sus	5	0.001
Vcc3_3	3.3	0.228
VccADAC3	3.3	0.001
VccADPLLA	1.05	0.01
VccADPLLB	1.05	0.01
VccCore	1.05	1.14
VccDMI	1.05	0.042
VccIO	1.05	3.187
VccASW	1.05	0.903
VccSPI	1.05	0.01
VccDSW3_3	3.3	0.001
VccDFTERM	1.8	0.002
VccRTC	3.3	N/A
VccSus3_3	3.3	0.065
VccSusHDA	3.3	0.01
VccVRM	1.5	0.127
VccClkDMI	1.05	0.075
VccSSC	1.05	0.095
VccDIFFCLKN	1.05	0.055
VccALVDS	3.3	0.001
VccTX_LVDS	1.8	0.001

CPT 8/9 PWR

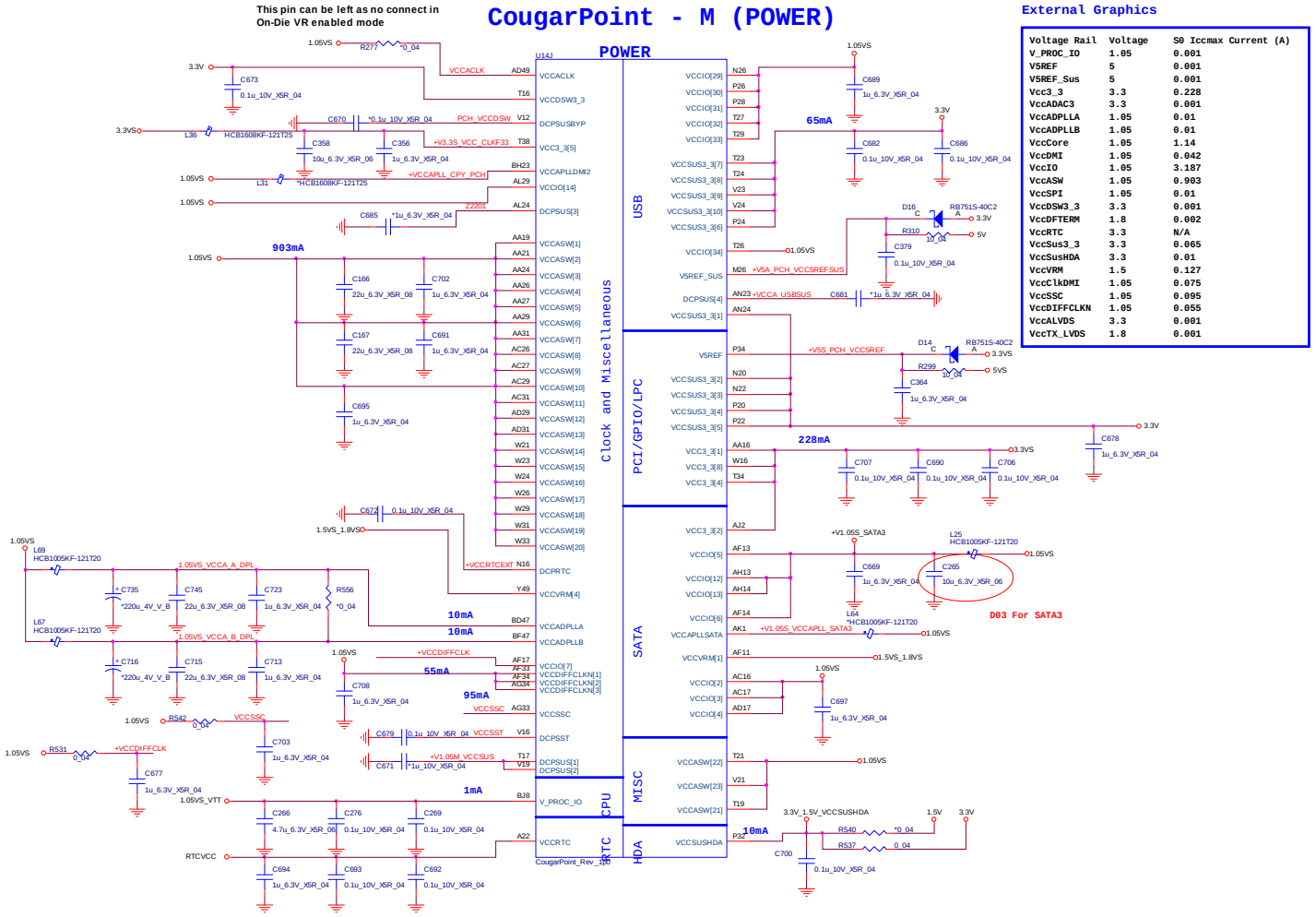

External Graphics

Voltage Rail	Voltage	S0 Iccmax Current (A)
V_PROC_IO	1.05	0.001
V5REF	5	0.001
V5REF_Sus	5	0.001
Vcc3_3	3.3	0.228
VccADAC3	3.3	0.001
VccADPLLA	1.05	0.01
VccADPLLB	1.05	0.01
VccCore	1.05	1.14
VccDMI	1.05	0.042
VccIO	1.05	3.187
VccASW	1.05	0.903
VccSPI	1.05	0.01
VccDSW3_3	3.3	0.001
VccDFTERM	1.8	0.002
VccRTC	3.3	N/A
VccSus3_3	3.3	0.065
VccSusHDA	3.3	0.01
VccVRM	1.5	0.127
VccClkDMI	1.05	0.075
VccSSC	1.05	0.095
VccDIFFCLKN	1.05	0.055
VccALVDS	3.3	0.001
VccTX_LVDS	1.8	0.001

Sheet 22 of 56
CPT 8/9 PWR

B.Schematic Diagrams

SATA HDD CONN, Re- Driver

Sheet 23 of 56
SATA HDD CONN,
Re- Driver

SINGAL SATA HDD

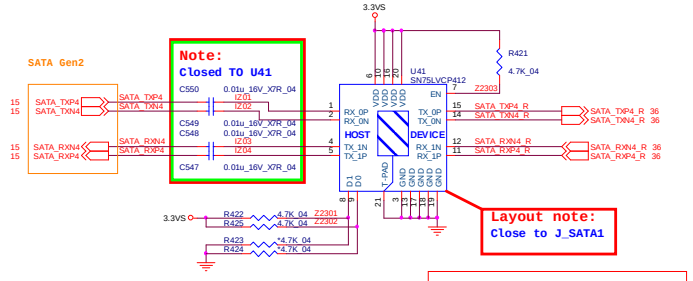

SN75LVCP412 Re-Driver.

D0	D1	Function
0	0	CH0 & CH1 -> 0 dB
1	0	CH0 -> 5 dB CH1 -> 0 dB
0	1	CH0 -> 0 dB CH1 -> 5 dB
1	1	CH0 -> 5 dB CH1 -> 5 dB

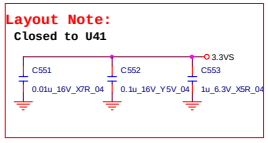

SN75LVCP601RTJ Re-Driver.

DE1	DE2	De-Emphasis dB(at 6GPbps)
NC	NC	-4 (default)
0	0	0
1	1	-2

EQ1	EQ2	Equalization dB (at 6Gbps)
NC	NC	0 (default)
0	0	7
1	1	14

DEW1	DEW2	DE Width
0	0	Short(at SATA 1.5/3/6 Gpbs)
1	1	Long(at SATA 1.5/3 Gpbs)

EN	Device Function--Standy Mode
0	Device in standby mode
1	Device enabled

DUAL SATA HDD

D03 Change port0 and port1 Re-Driver to GEN3

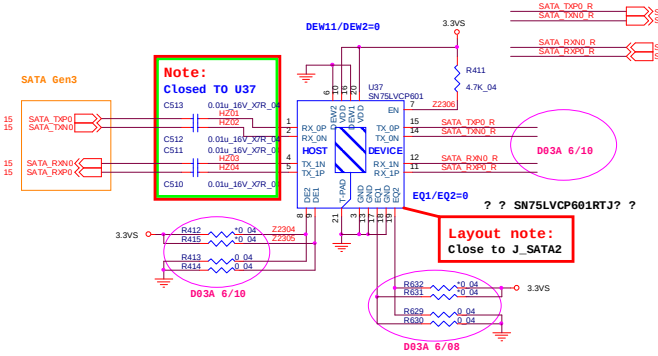

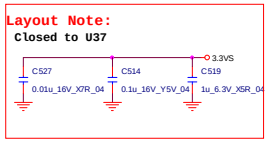

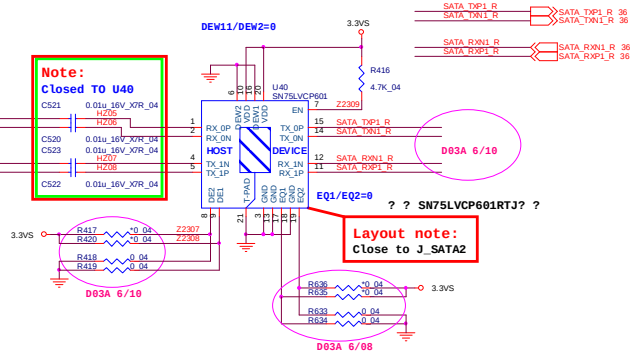

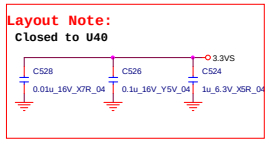

CPT, DVI

CRT/DVI Connector

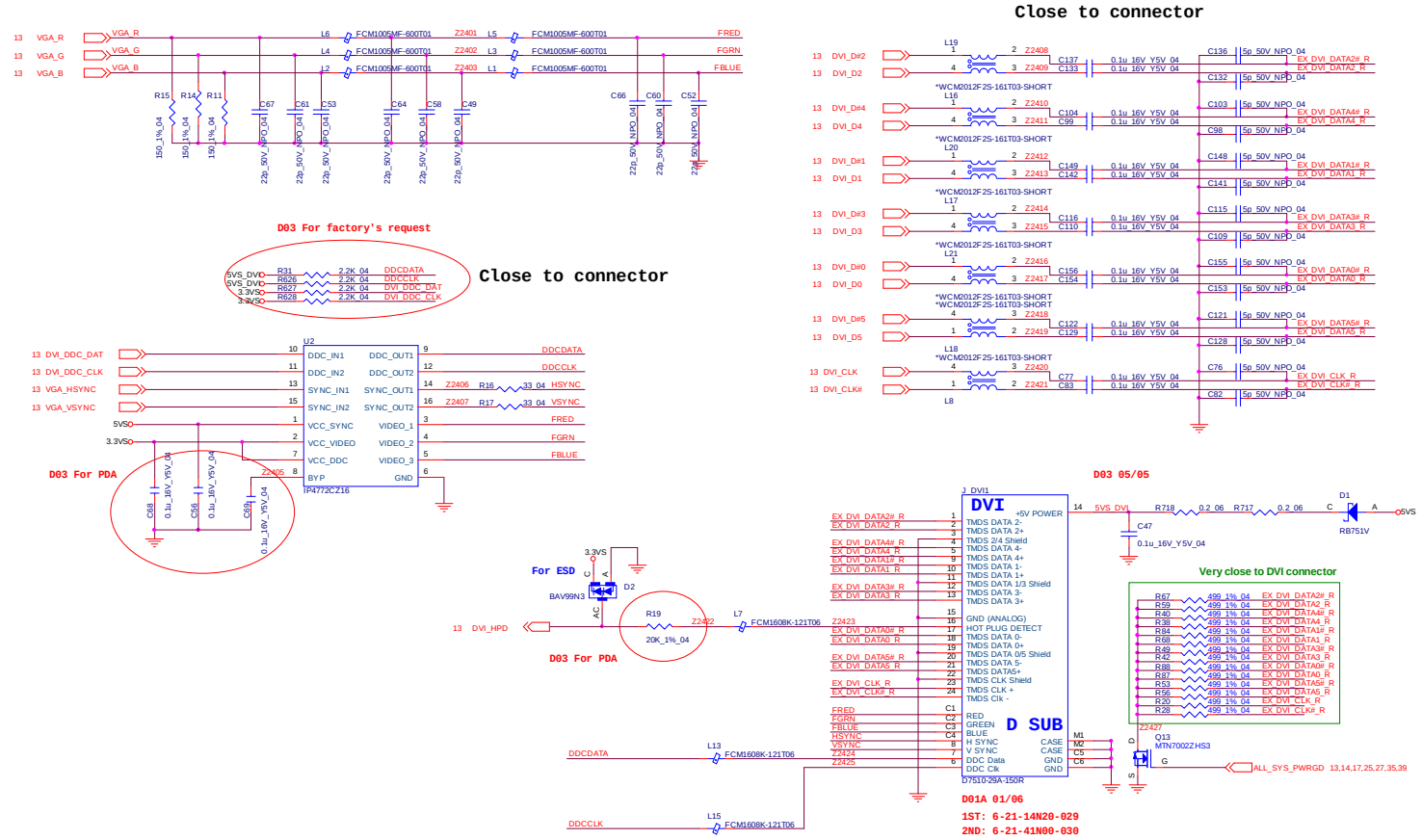

Sheet 24 of 56
CPT, DVI

LED PANEL

18.4" PANEL

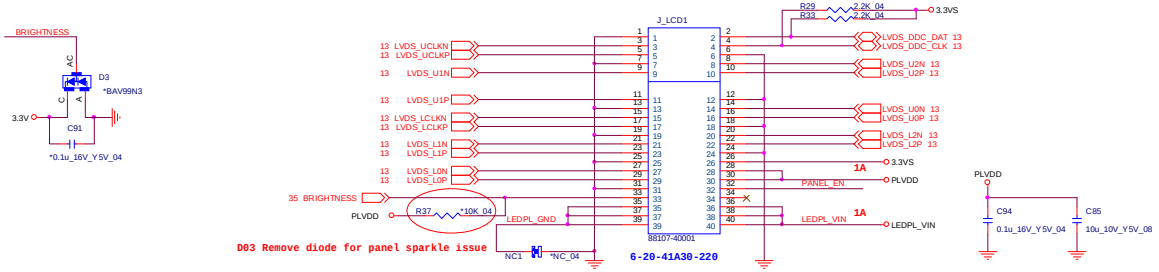

Sheet 25 of 56
LED PANEL

PANEL POWER

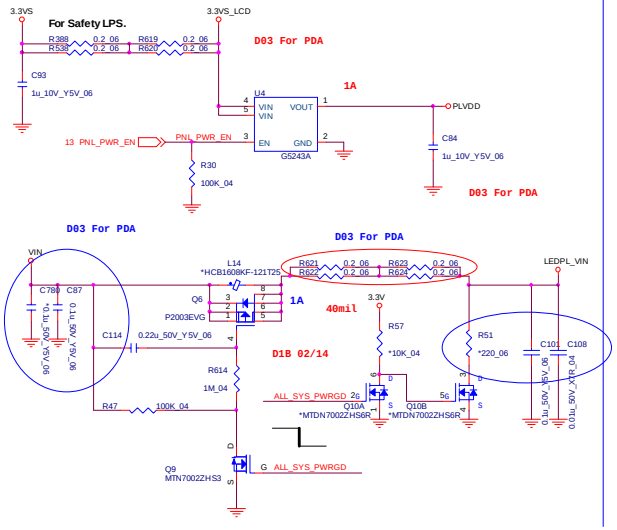

PANEL GATE

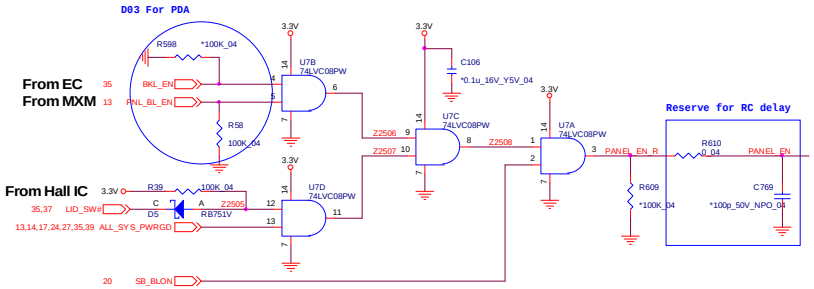

FAN CONTROL

Touch Sensor LED control

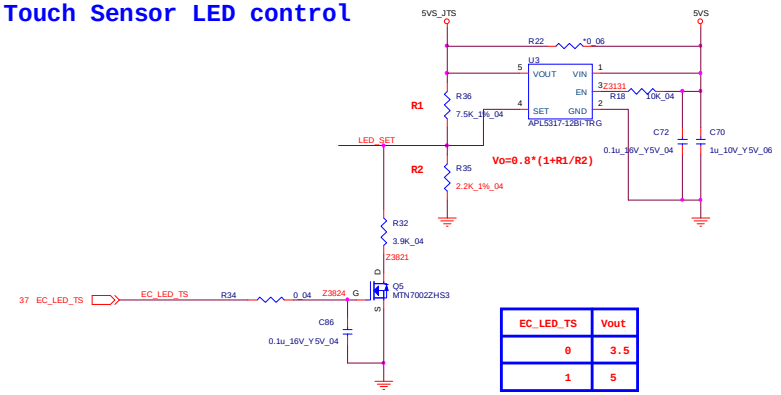

EC_LED_TS	Vout
0	3.5
1	5

SYSTEN FAN control

SYSFAN_EN	SYSFAN_FULL	5VS_SYSFAN
0	0	0
0	1	0
1	0	3.5
1	1	5

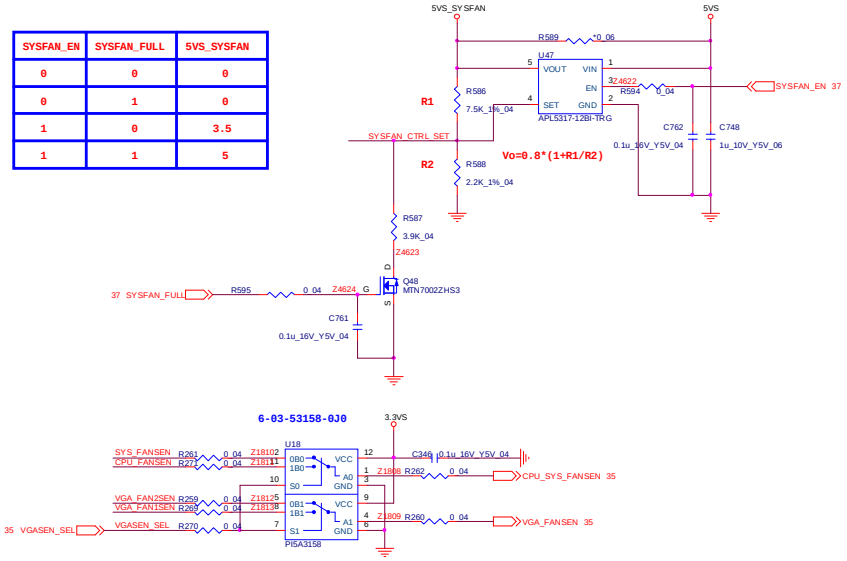

FAN CONTROL

CPU FAN

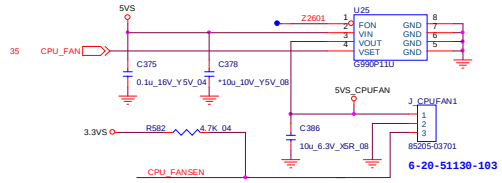

VGA MASTER FAN

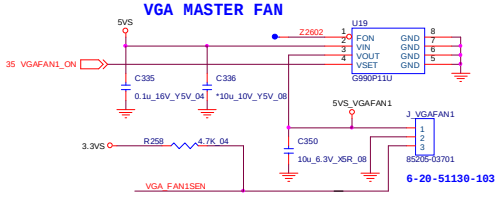

VGA SLAVE FAN

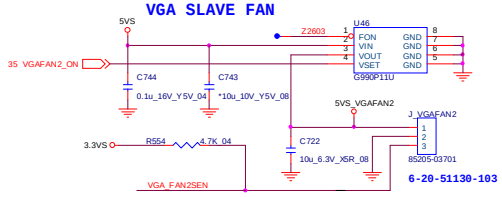

SYSTEM FAN

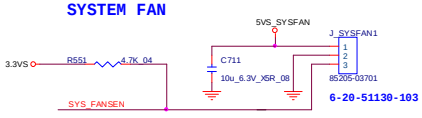

Sheet 26 of 56
FAN CONTROL

HDMI, RJ45 CONN

Sheet 27 of 56
HDMI, RJ45 CONN

HDMI Connector

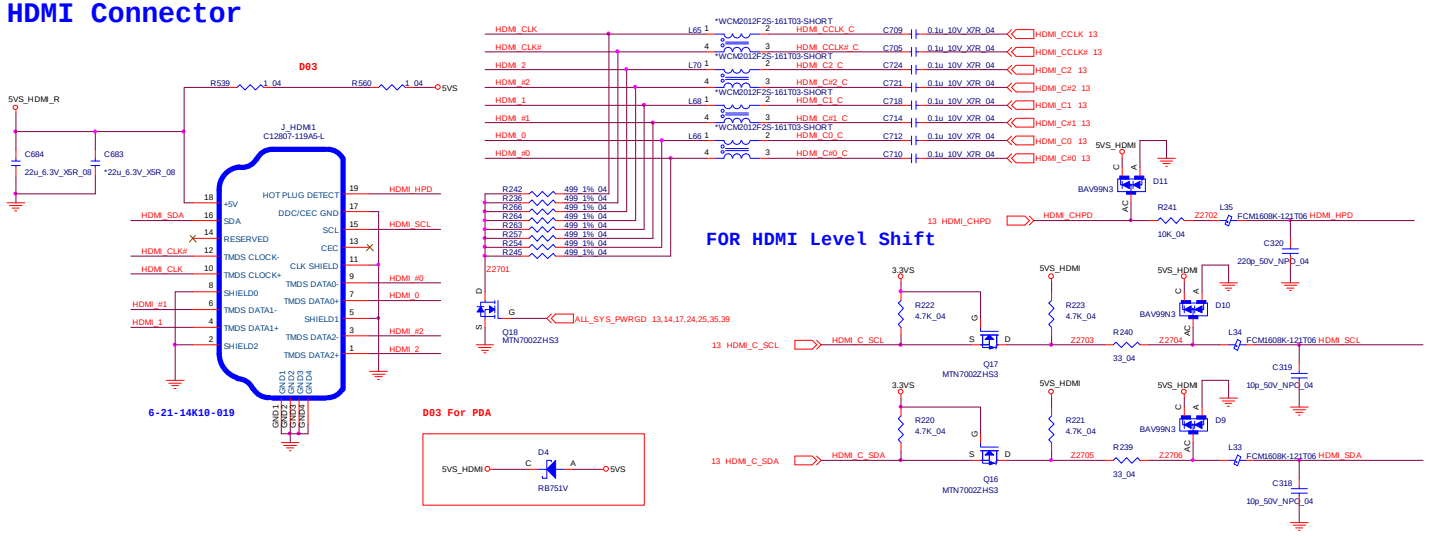

RJ45 Connector

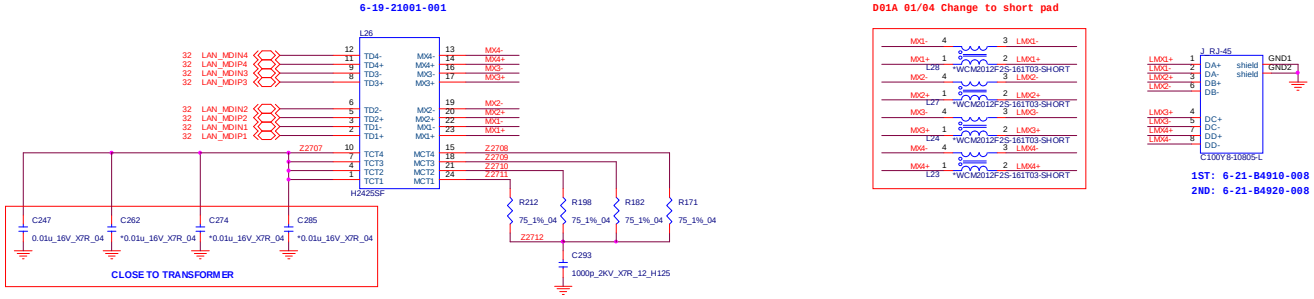

ODD, CCD, USB 2.0, BT, TPM

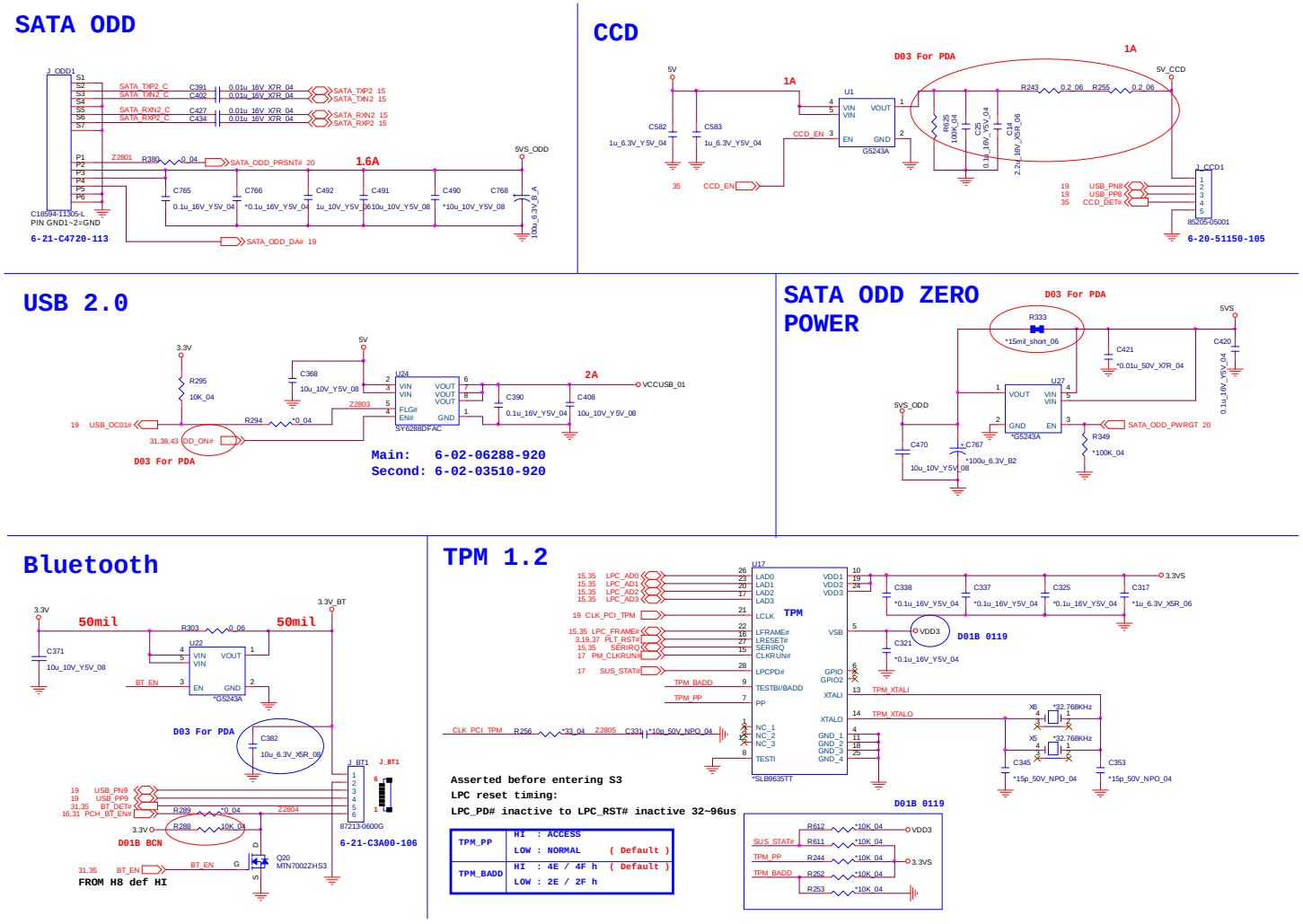

Sheet 28 of 56
ODD, CCD, USB 2.0, BT, TPM

B.Schematic Diagrams

CODEC, DMIC

Sheet 29 of 56
CODEC, DMIC

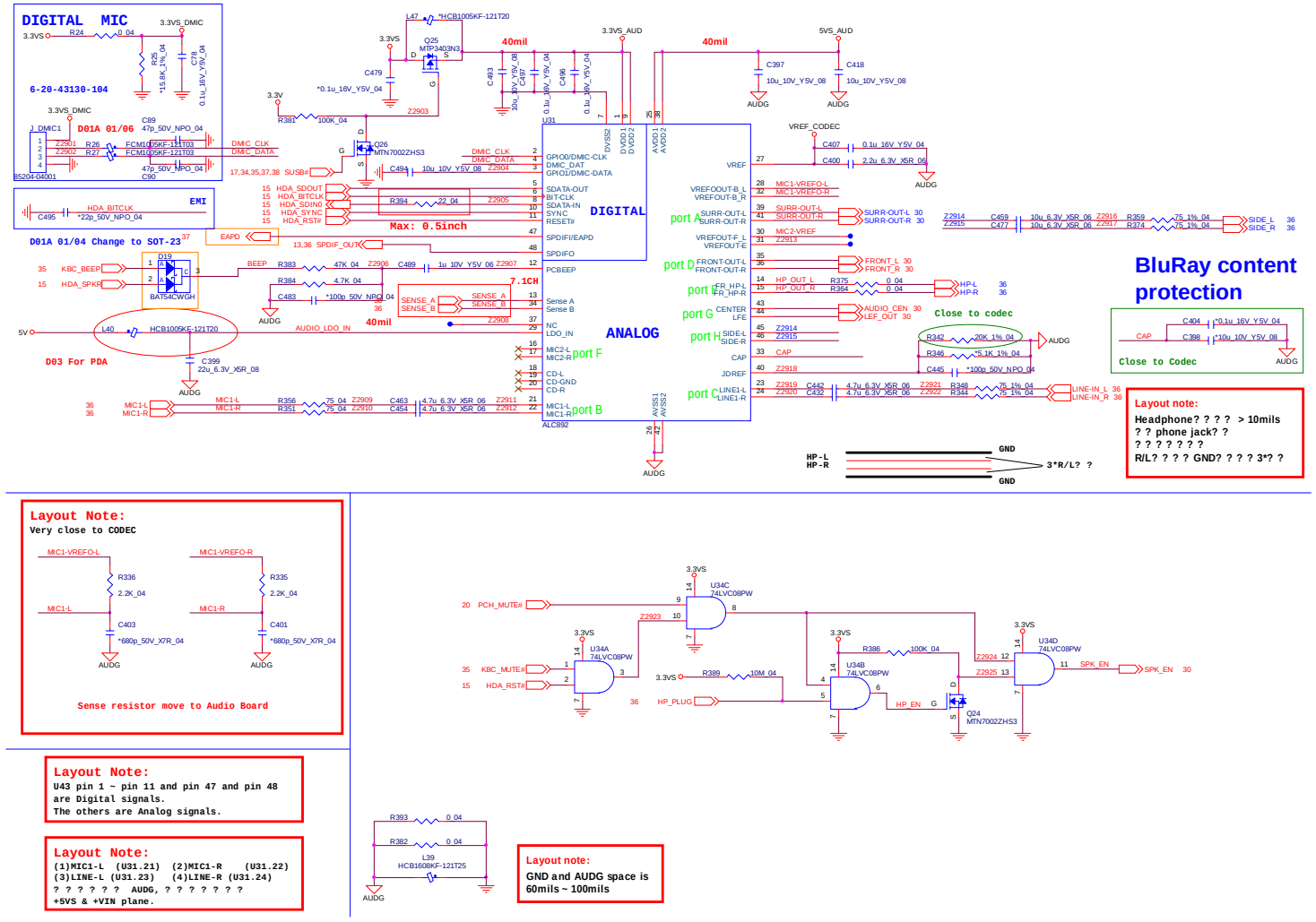

AUDIO AMP, SPK

FRONT R/L 2W 4ohm

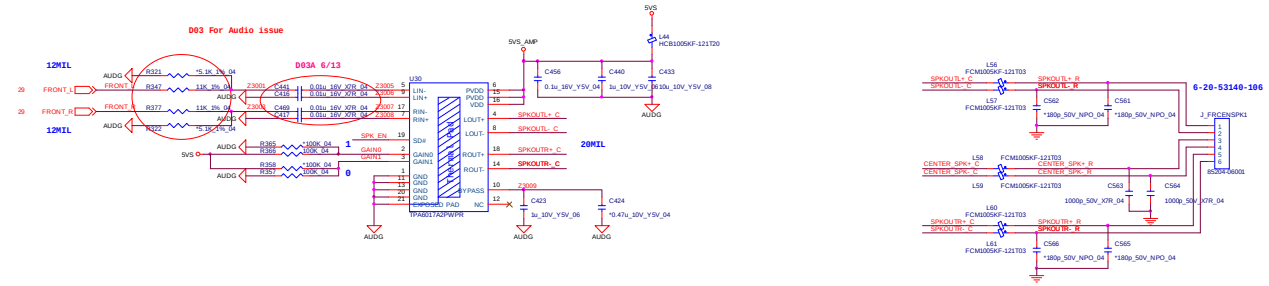

SURR R/L 1.5W 4ohm

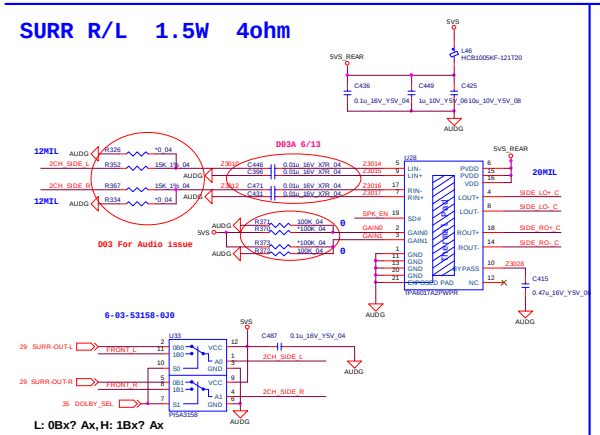

SURR R/L

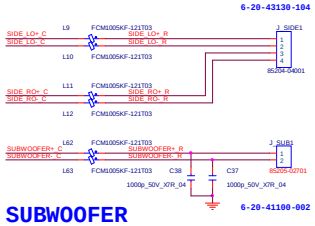

SUBWOOFER

CENTER 1.5W 4ohm/ SUBWOOFER 2W 4ohm

CENTER: FULL FREQ *SUBWOOFER:491Hz*

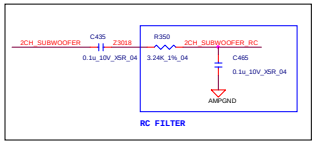

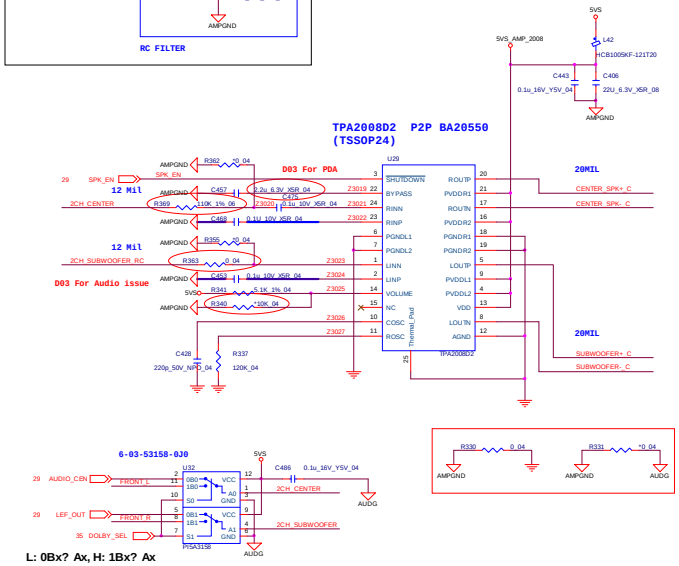

Sheet 30 of 56
AUDIO AMP, SPK

WLAN, TV, Charger USB

Sheet 31 of 56
WLAN, TV, Charger USB

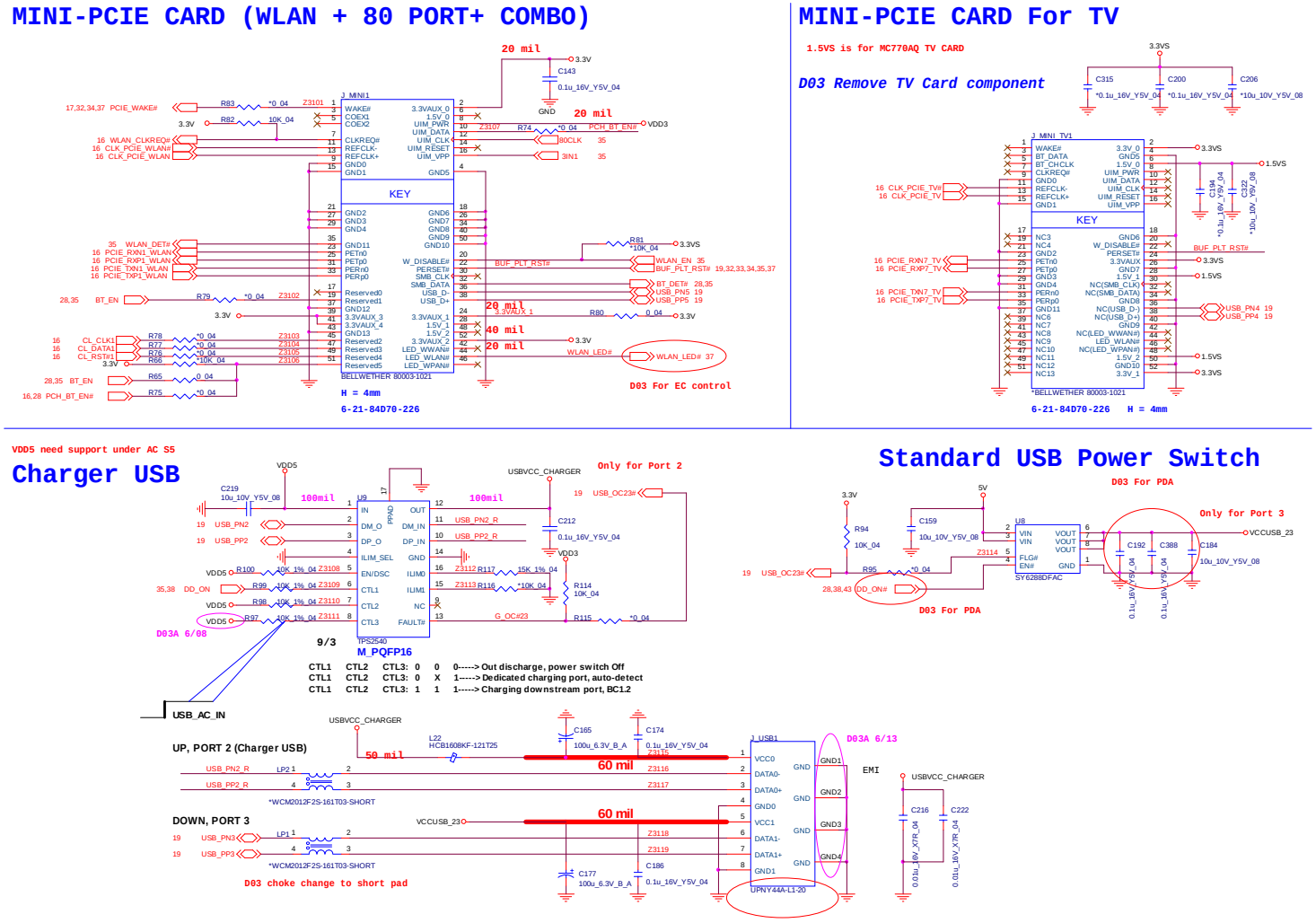

LAN, Card Reader

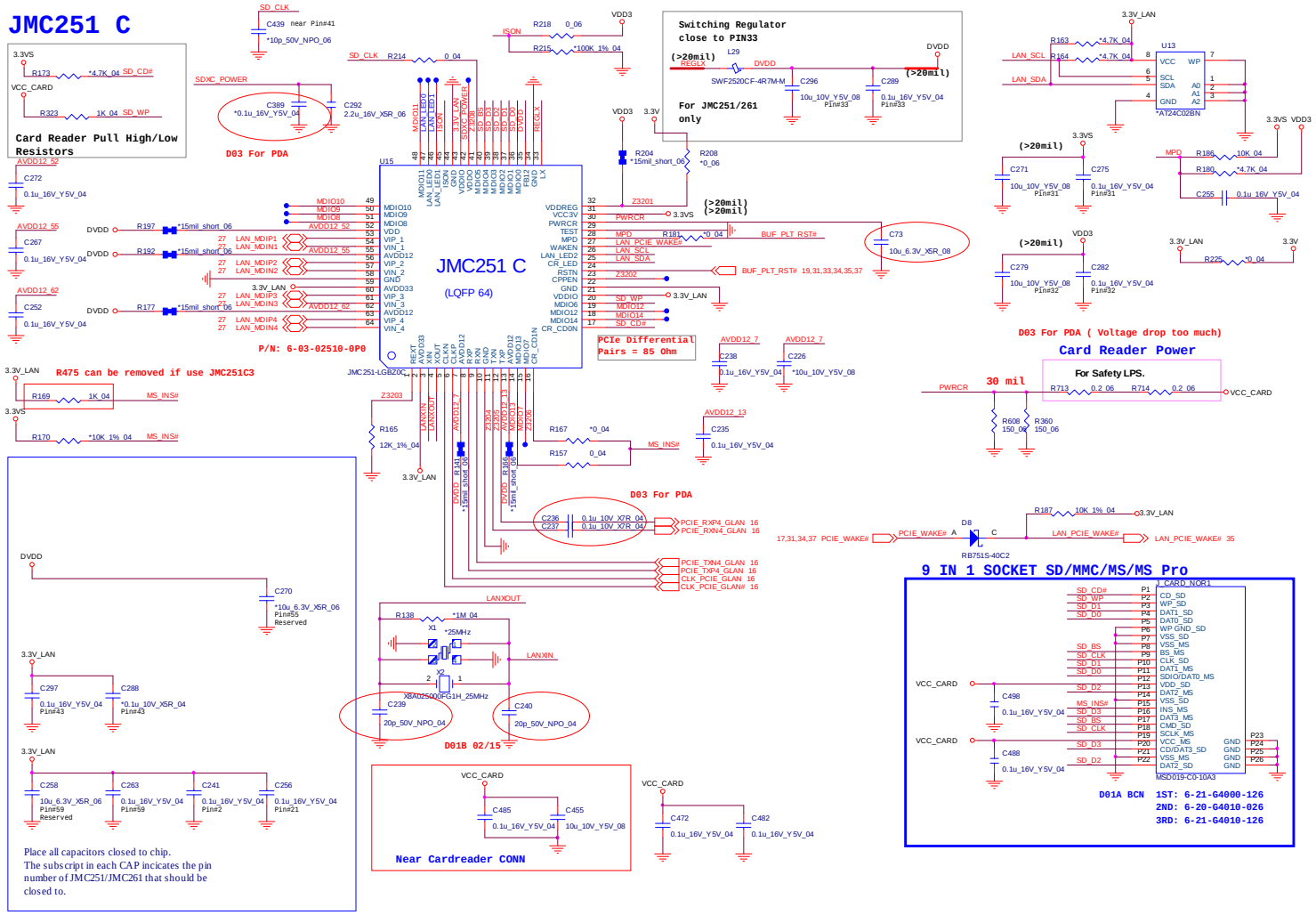

Sheet 32 of 56
LAN, Card Reader

B.Schematic Diagrams

IEEE 1394

JMB380C

Sheet 33 of 56
IEEE 1394

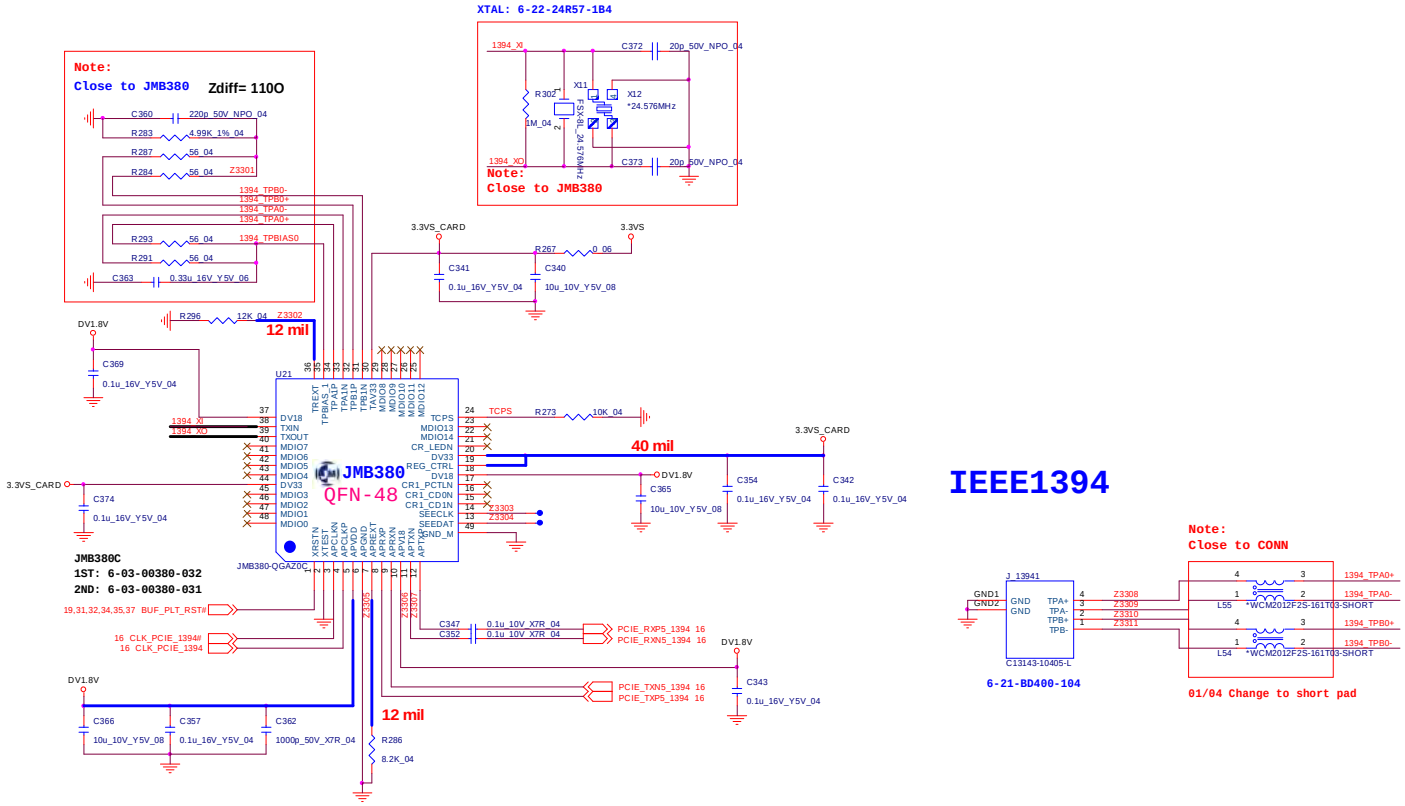

USB 3.0

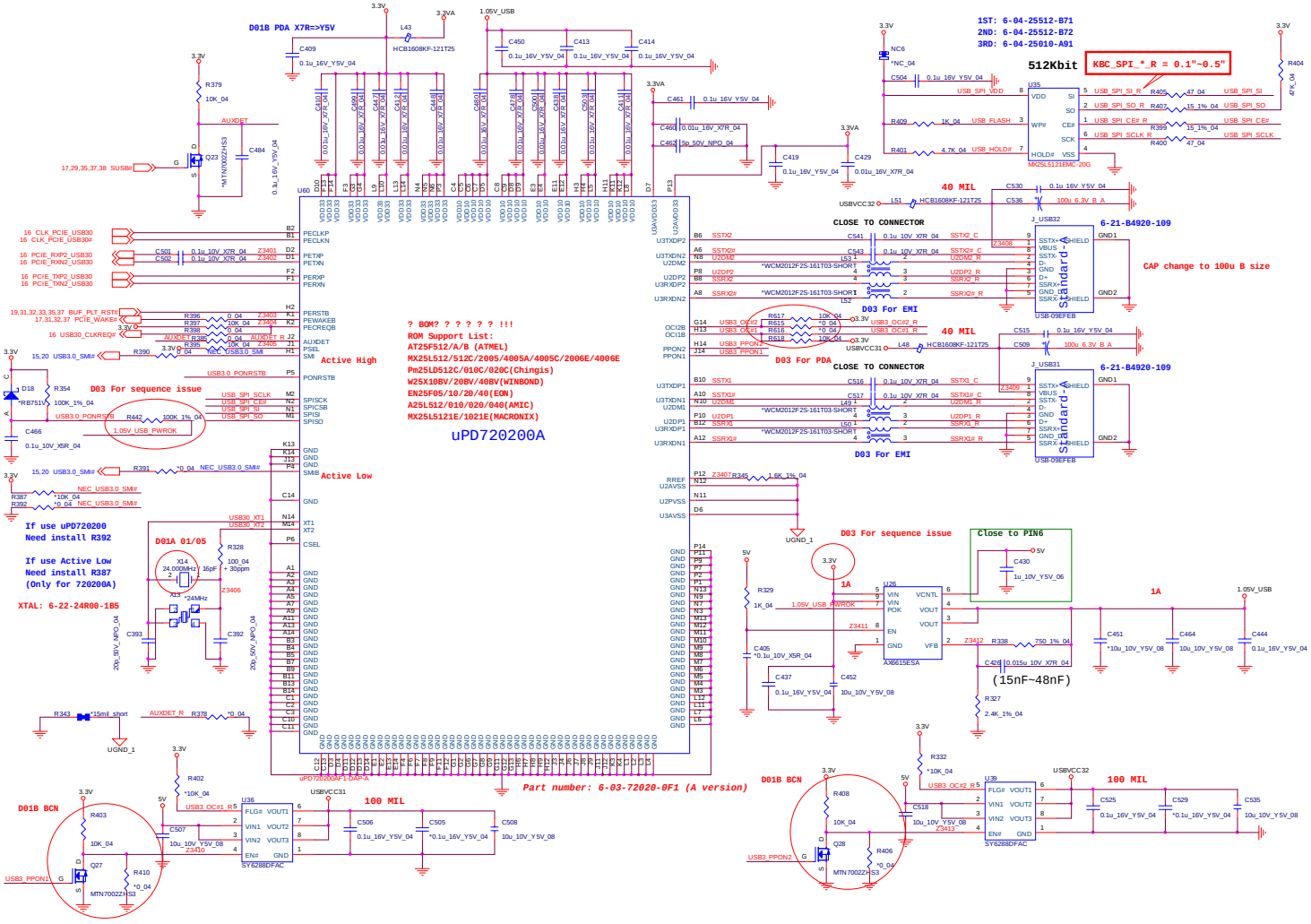

Sheet 34 of 56
USB 3.0

KBC ITE IT8519-BX

Sheet 35 of 56
KBC ITE IT8519-BX

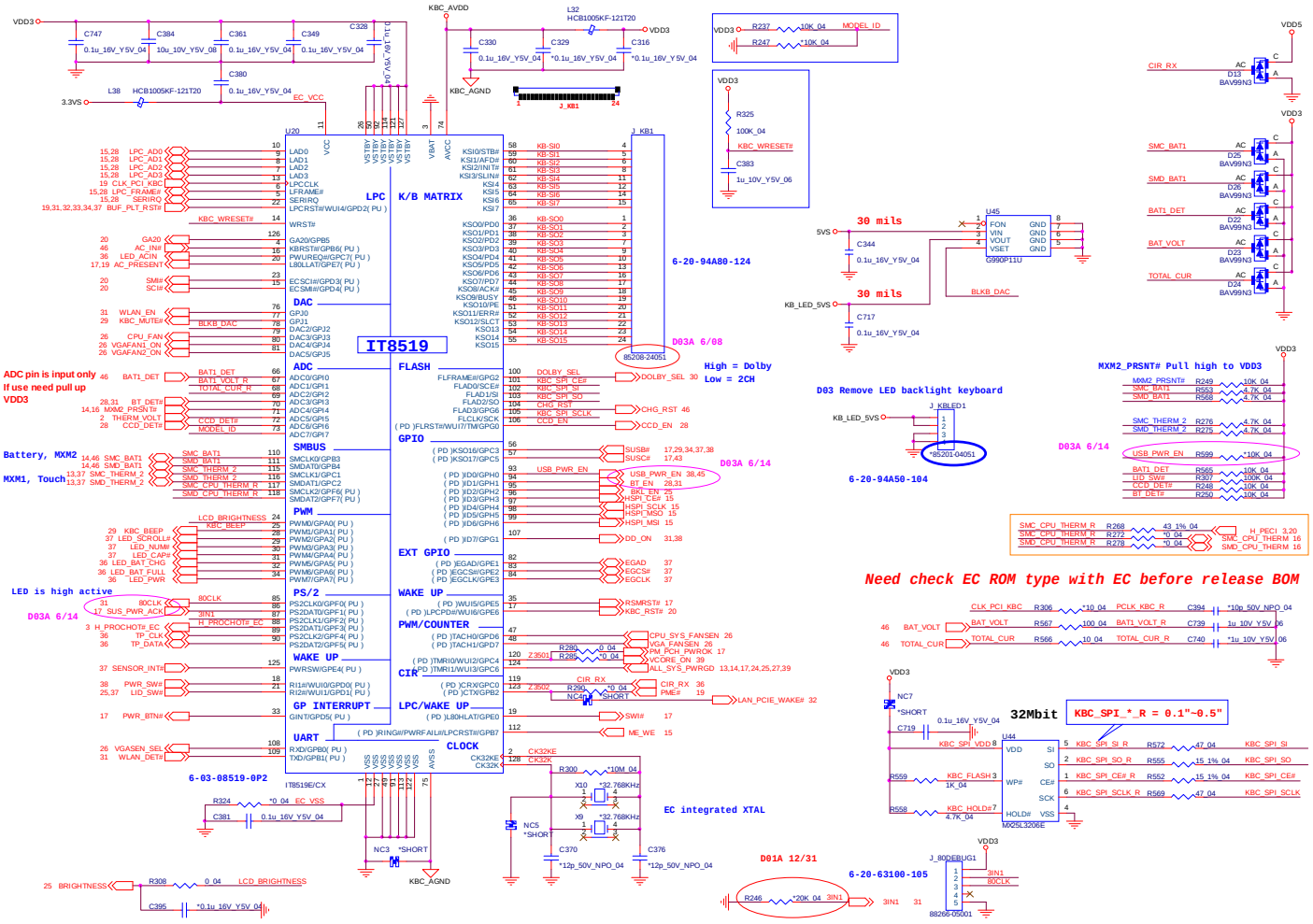

SMALL BOARD CONN-A

AUDIO B'd

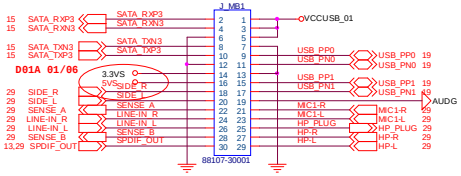

6-21-41A00-215

GAME KEY B'd

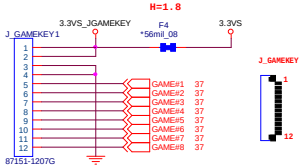

6-20-94A20-112

Click B'd

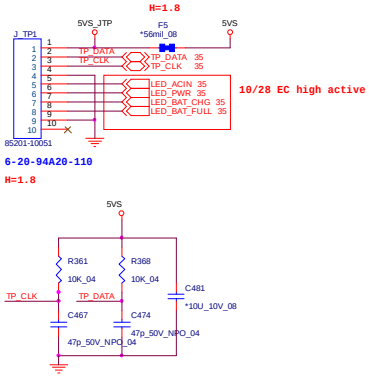

PWR BUTTON B'd

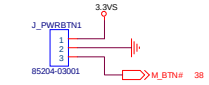

6-20-23120-003

Finger Printer B'd

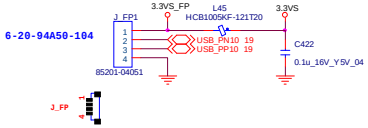

CIR BOARD

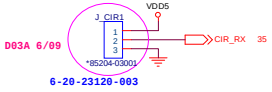

HDDx2 connector

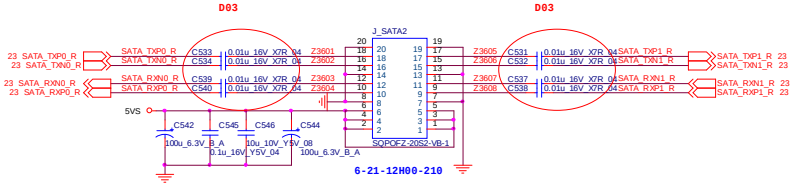

HDDx1 connector

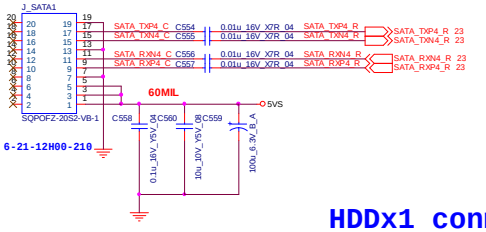

Sheet 36 of 56
SMALL BOARD
CONN-A

SMALL BOARD CONN-B

Sheet 37 of 56
SMALL BOARD CONN-B

TOUCH PAD LED B'd

6-20-53140-106

LOGO LED B'd

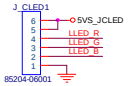

6-20-53140-106

TOUCH SENSOR B'd

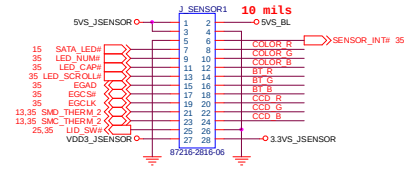

6-21-22A00-214

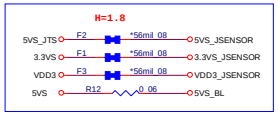

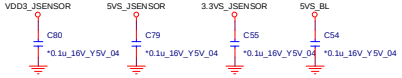

EXPRESS CARD BOARD BTB CONN

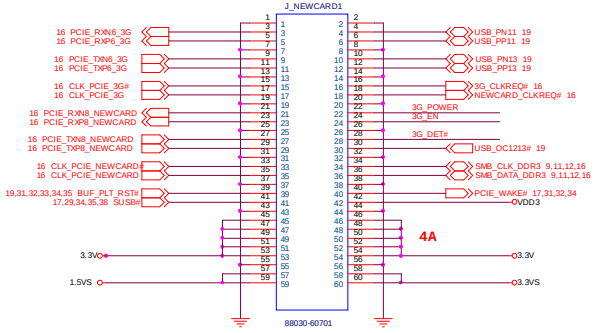

6-21-C1D00-230

ITE8301E

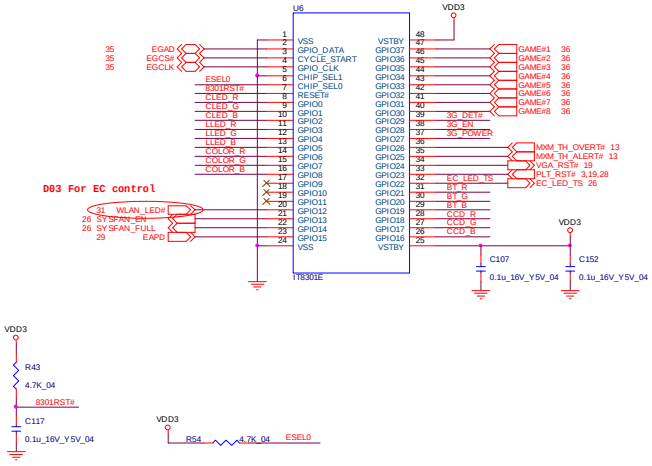

POWER SYSTEM

POWER SW

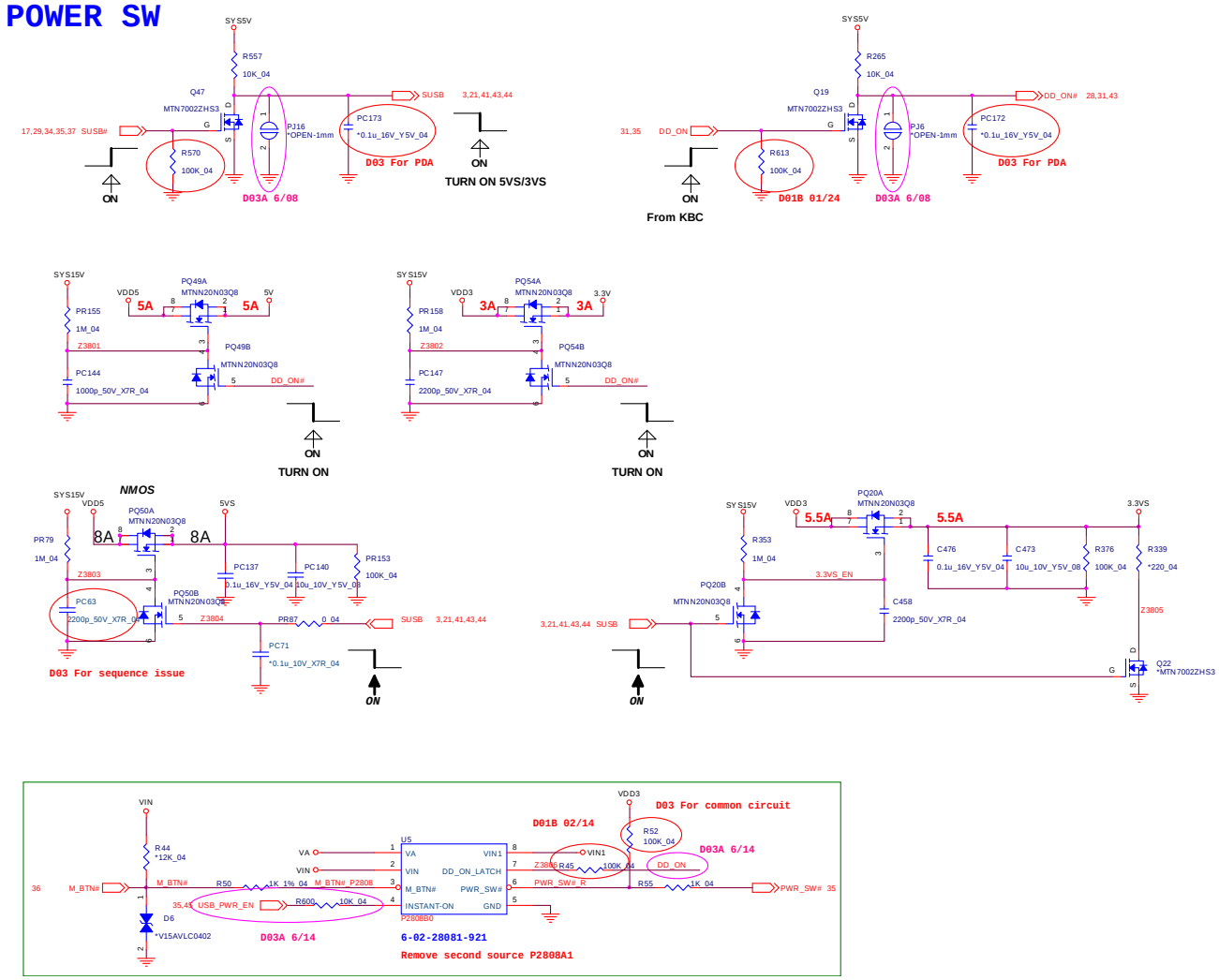

Sheet 38 of 56
POWER SYSTEM

PWR VCORE-1

Sheet 39 of 56
PWR VCORE-1

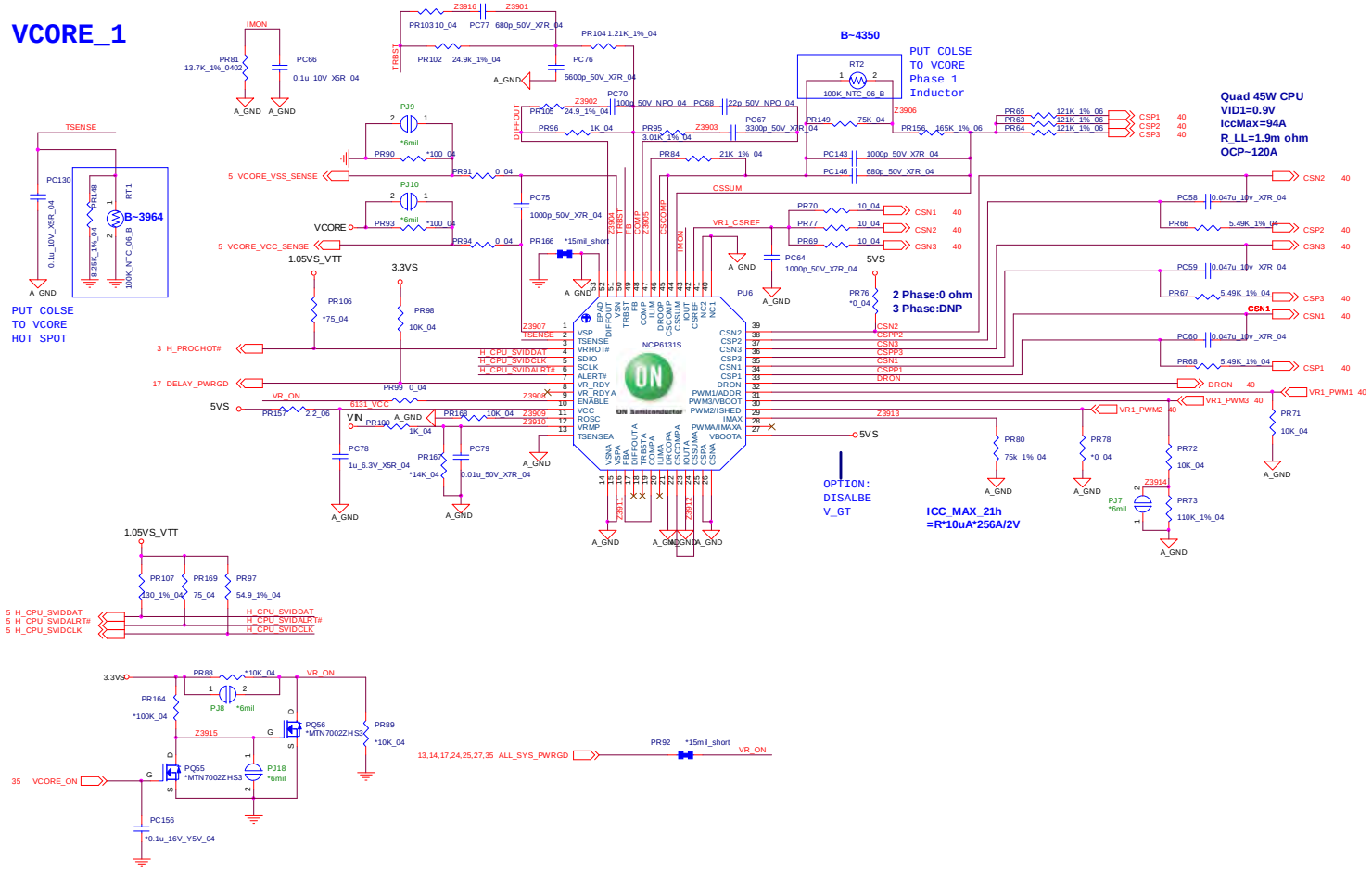

PWR VCORE-2

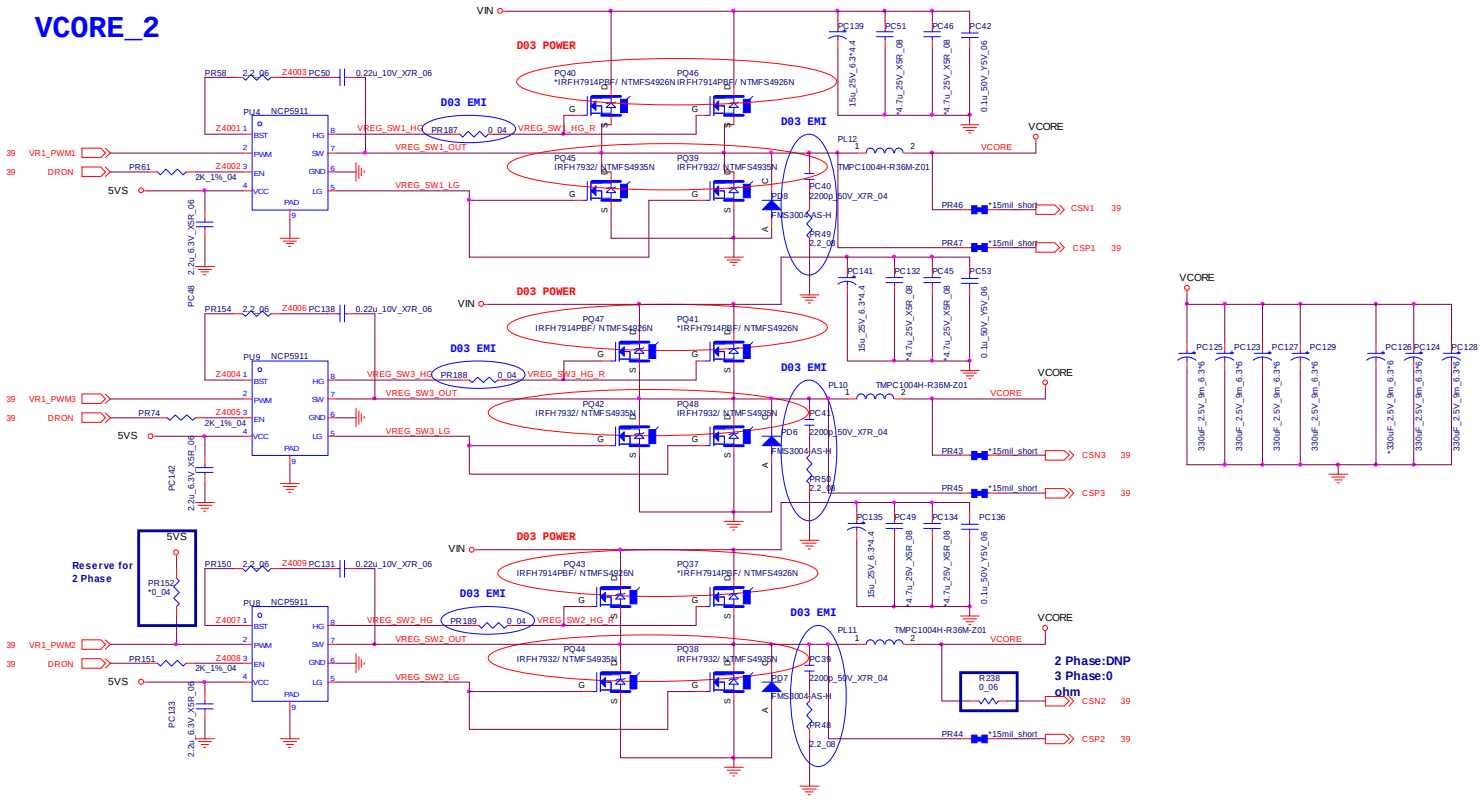

Sheet 40 of 56
PWR VCORE-2

PWR 1.05VS/ 1.05VS CPU

Sheet 41 of 56
PWR 1.05VS/
1.05VS CPU

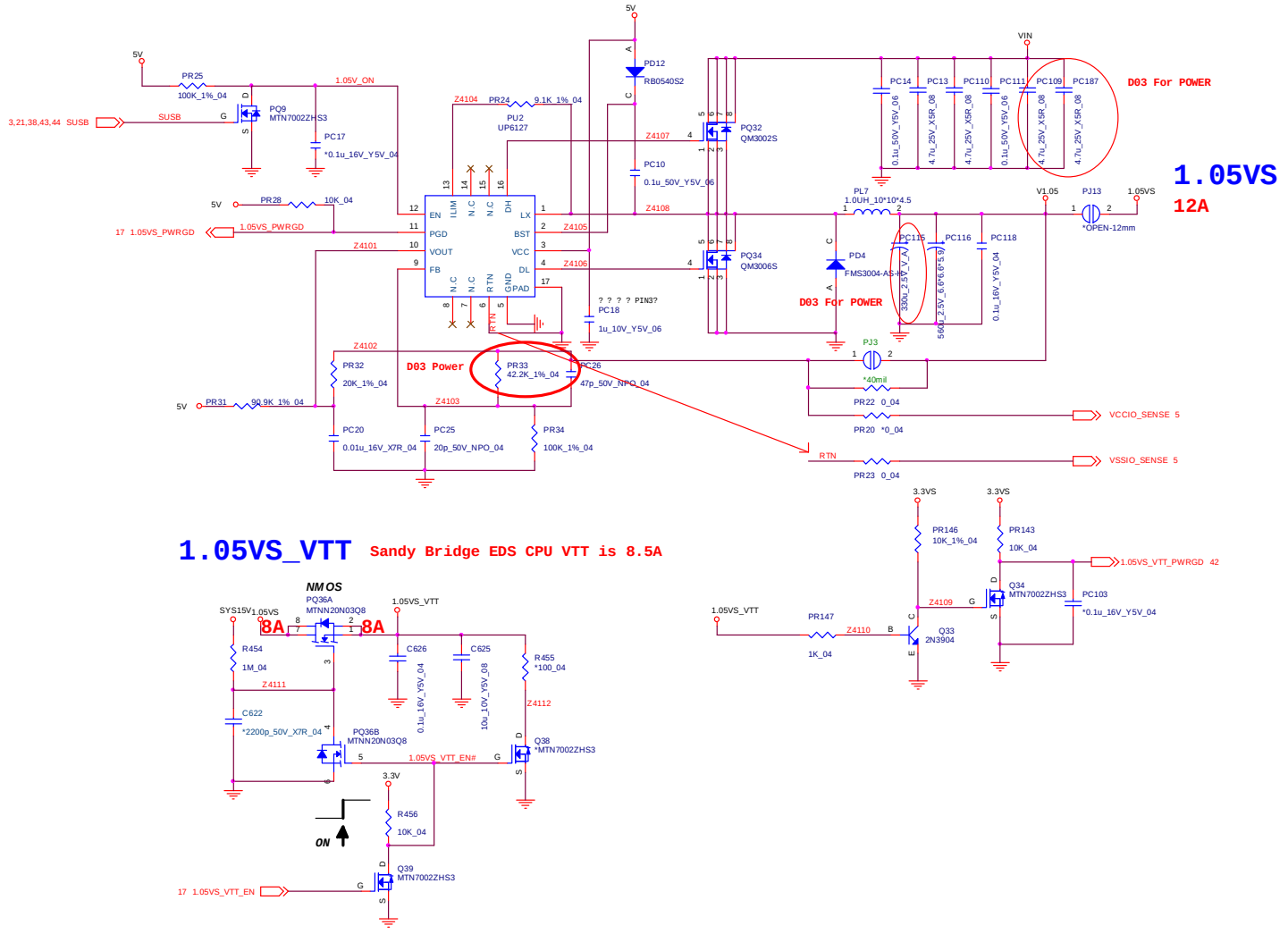

PWR 0.85VS

	0.9V	0.8V	0.7V	0.6V
VCCSA_VID0	0	1	0	1
VCCSA_VID1	0	0	1	1

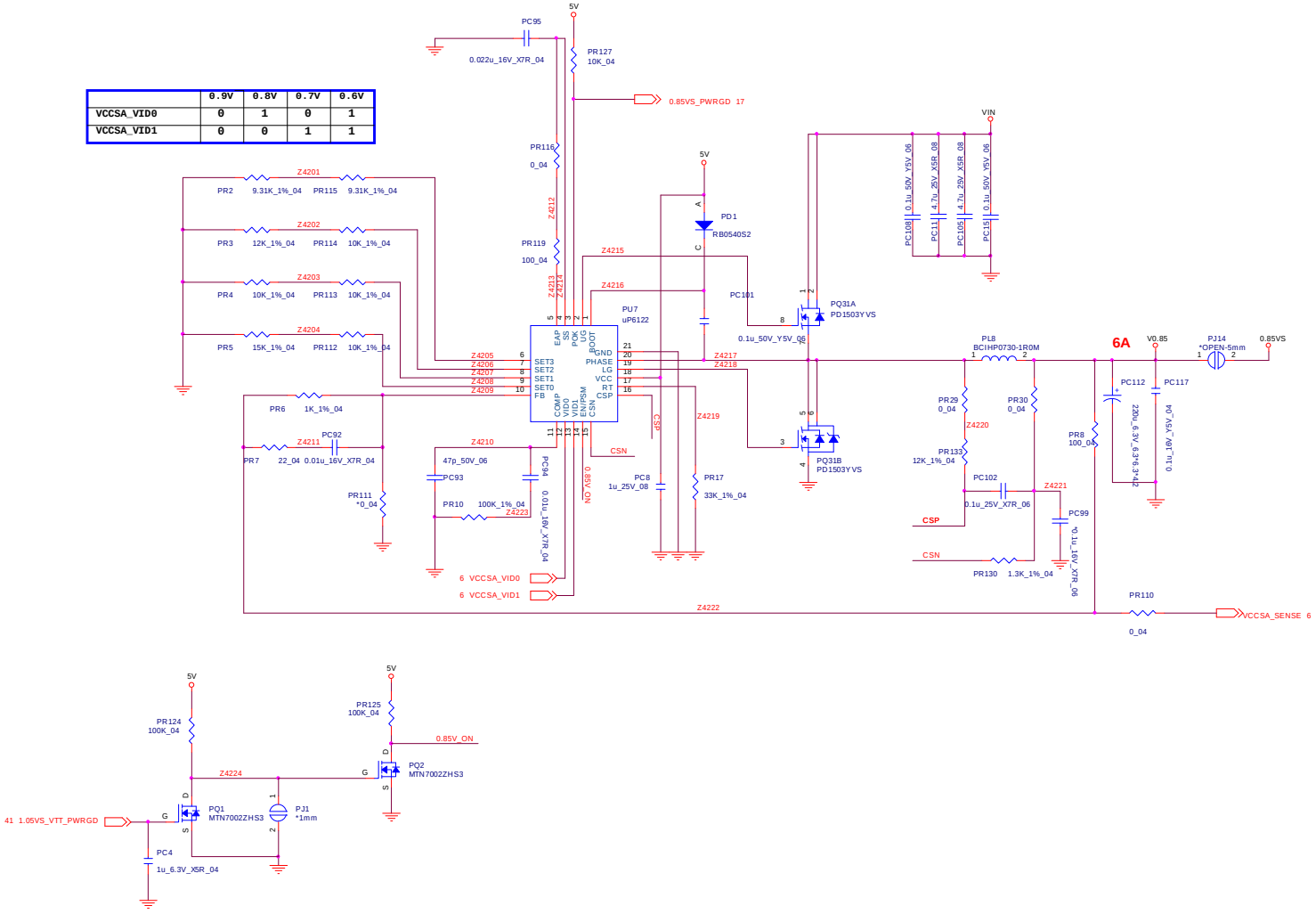

Sheet 42 of 56
PWR 0.85VS

PWR 1.5V/ VTT MEM

Sheet 43 of 56
PWR 1.5V/ VTT MEM

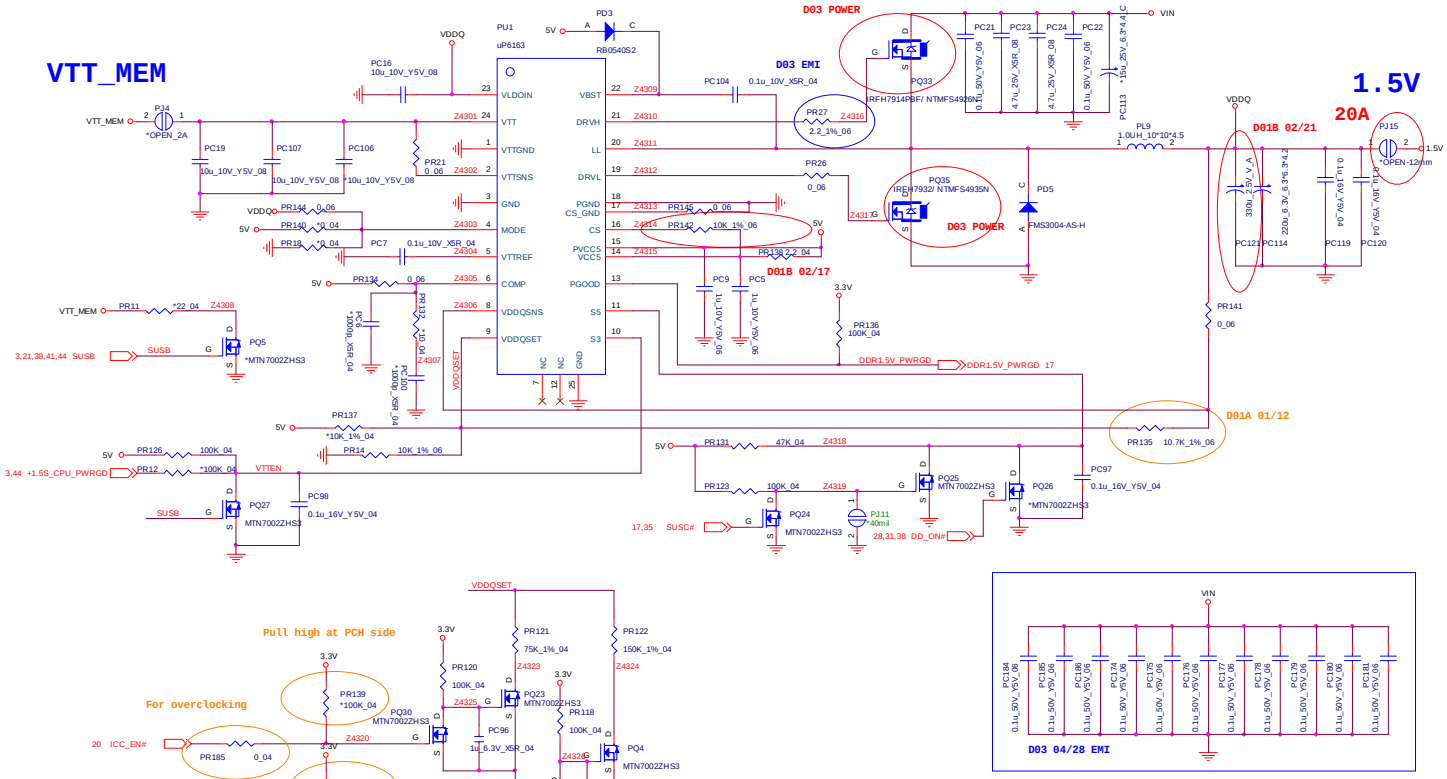

D01A 01/12

1.5V_CTRL1	1.5_CTRL0	Voltage
1	1	1.55V
1	0	1.60V
0	1	1.65V
0	0	1.70V

PWR 1.8VS/ 1.5VS/ 1.5VS CPU

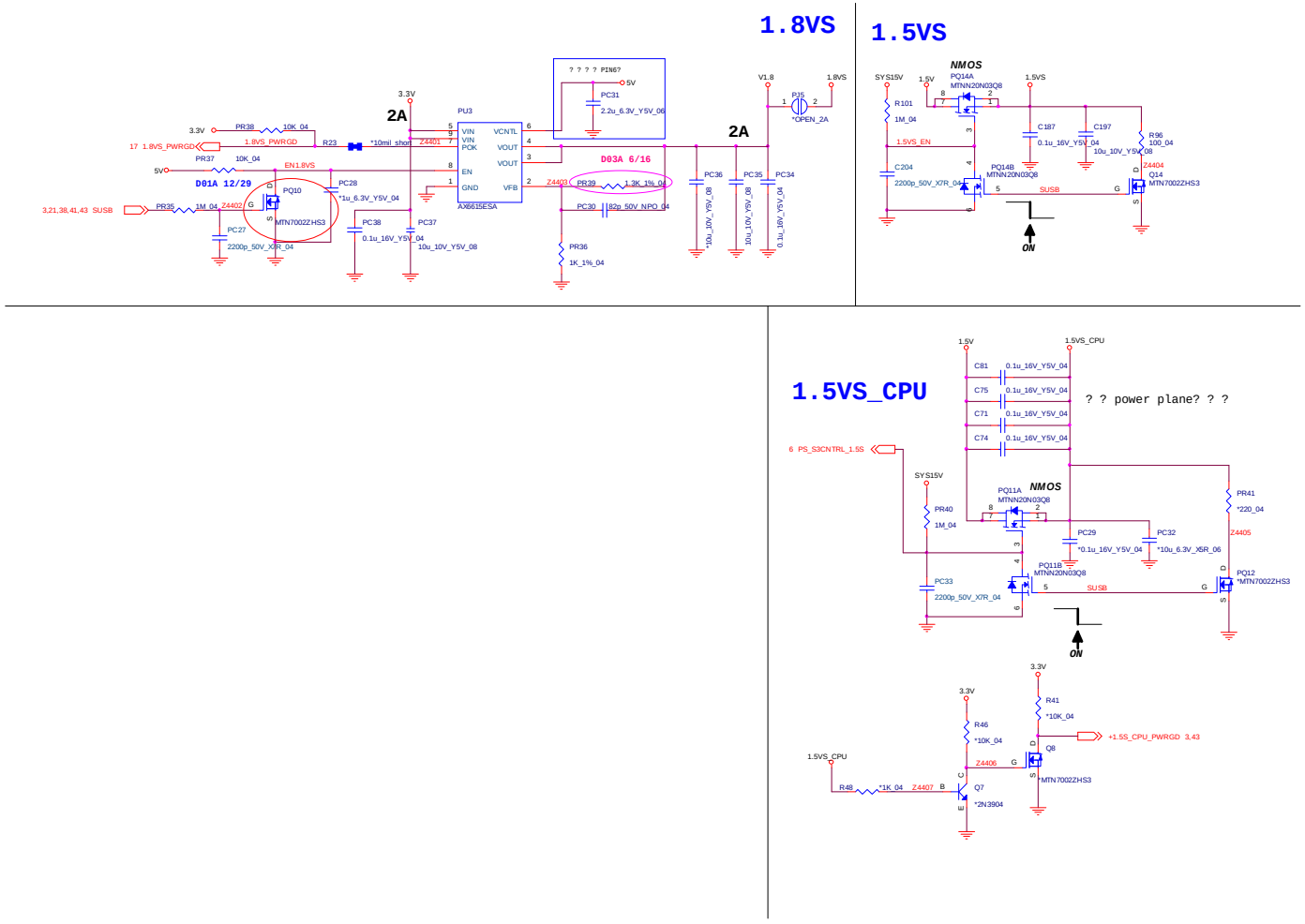

Sheet 44 of 56
PWR 1.8VS/ 1.5VS/ 1.5VS CPU

PWR VDD3/ VDD5

Sheet 45 of 56
PWR VDD3/ VDD5

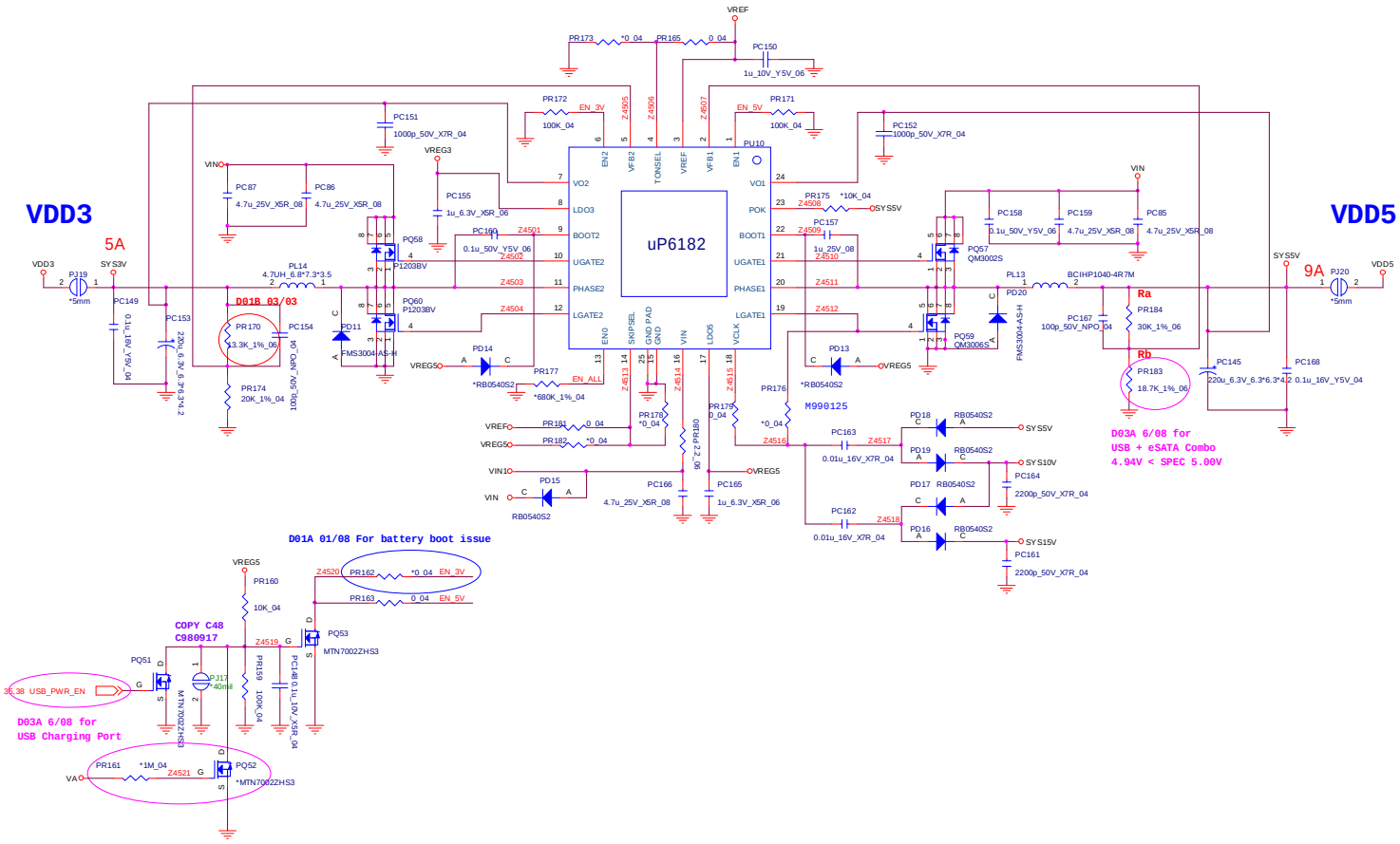

PWR CHARGER, DC IN

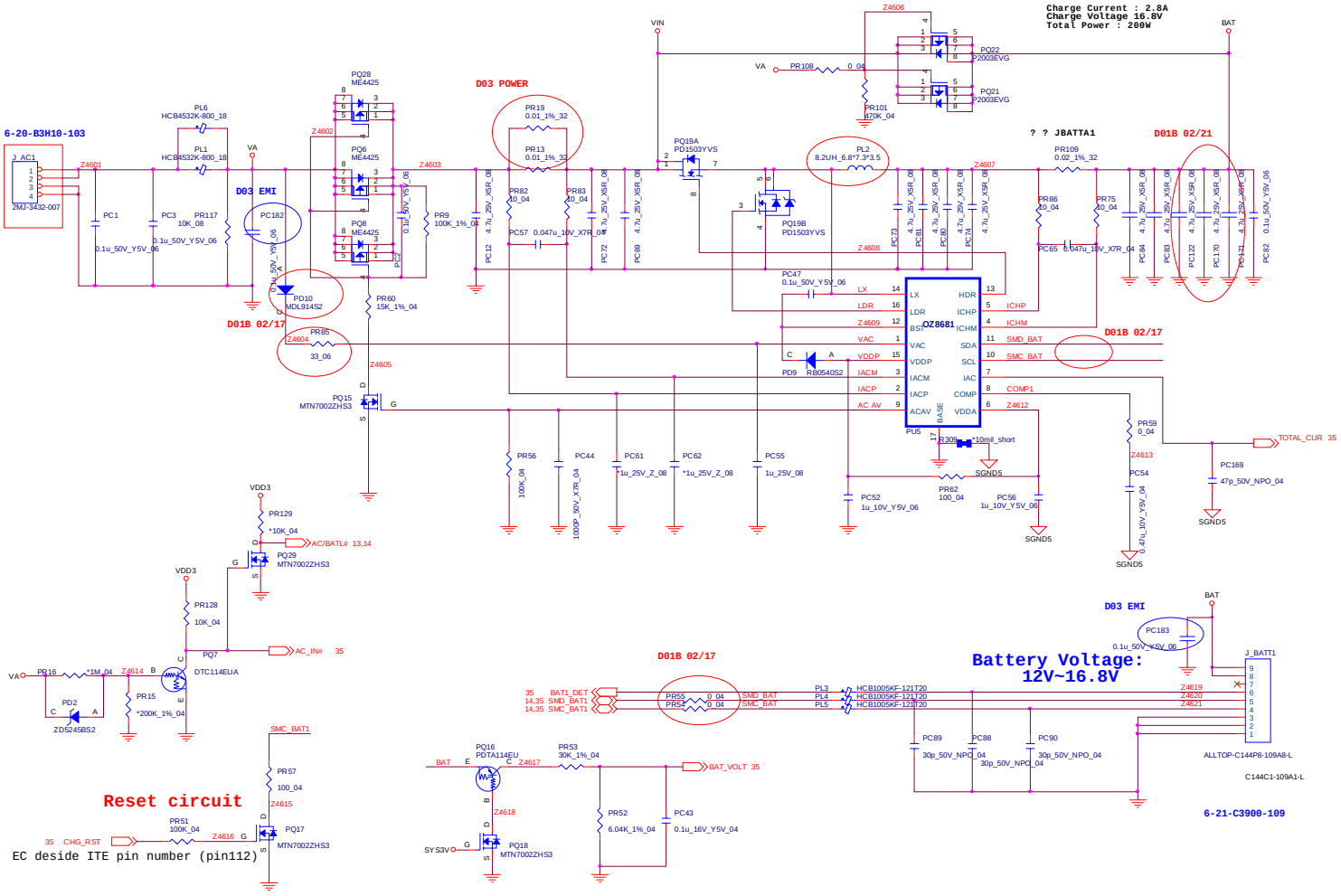

Sheet 46 of 56
PWR CHARGER, DC IN

SCREW HOLE

Sheet 47 of 56
SCREW HOLE

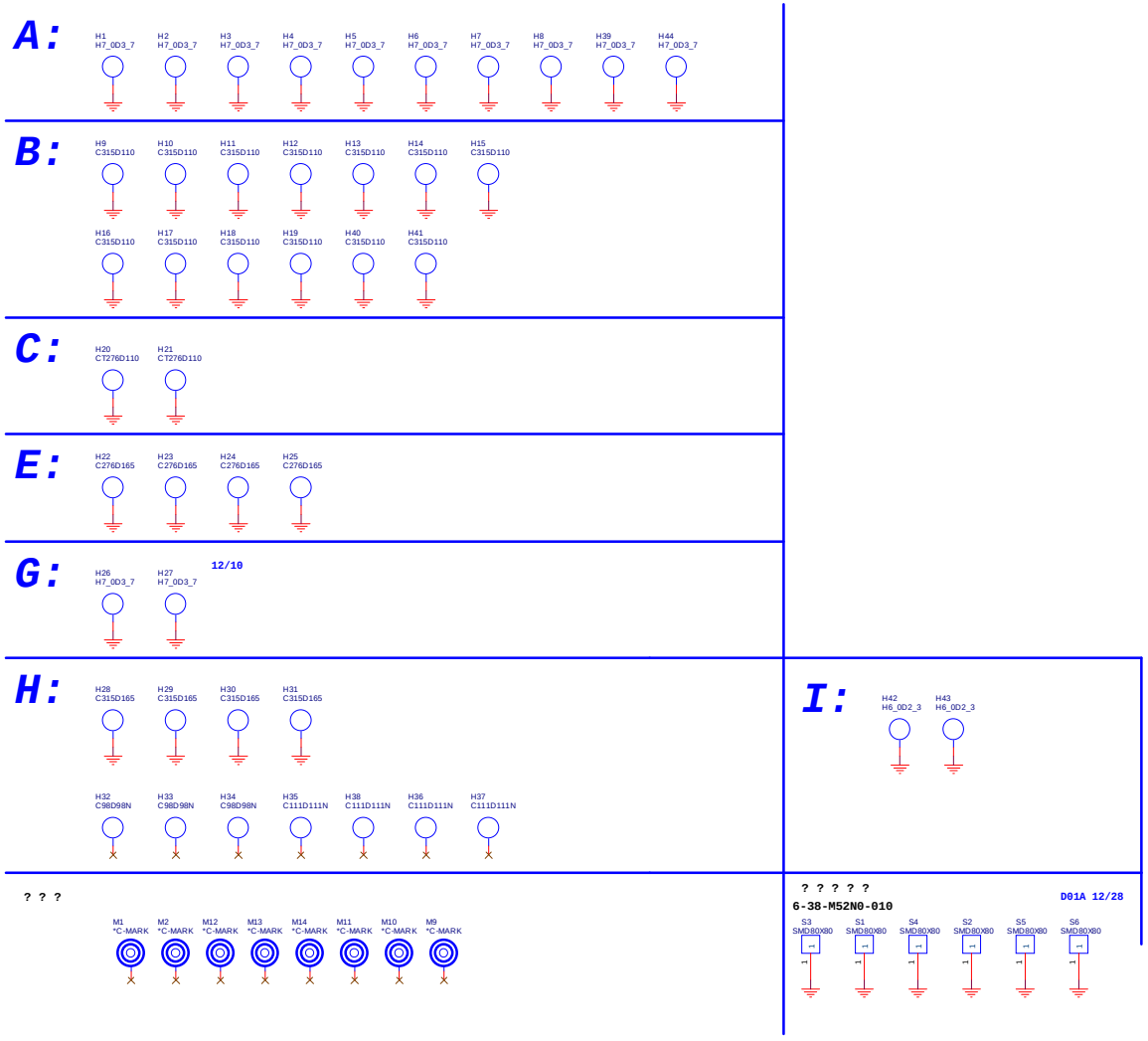

EXPRESS CARD BOARD

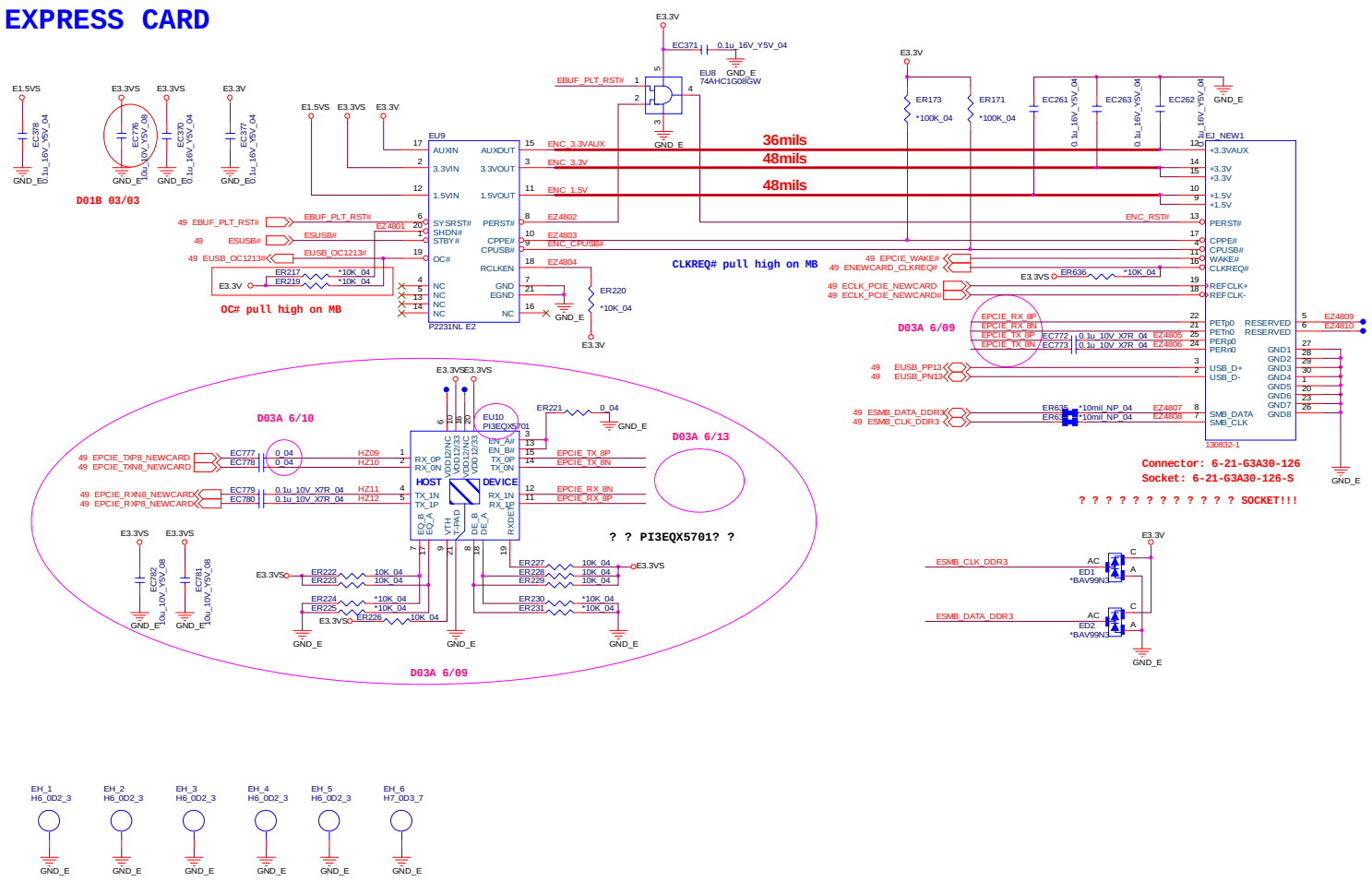

Sheet 48 of 56
EXPRESS CARD
BOARD

ISDB-T CARD/ TV CARD

Sheet 49 of 56
ISDB-T CARD/ TV CARD

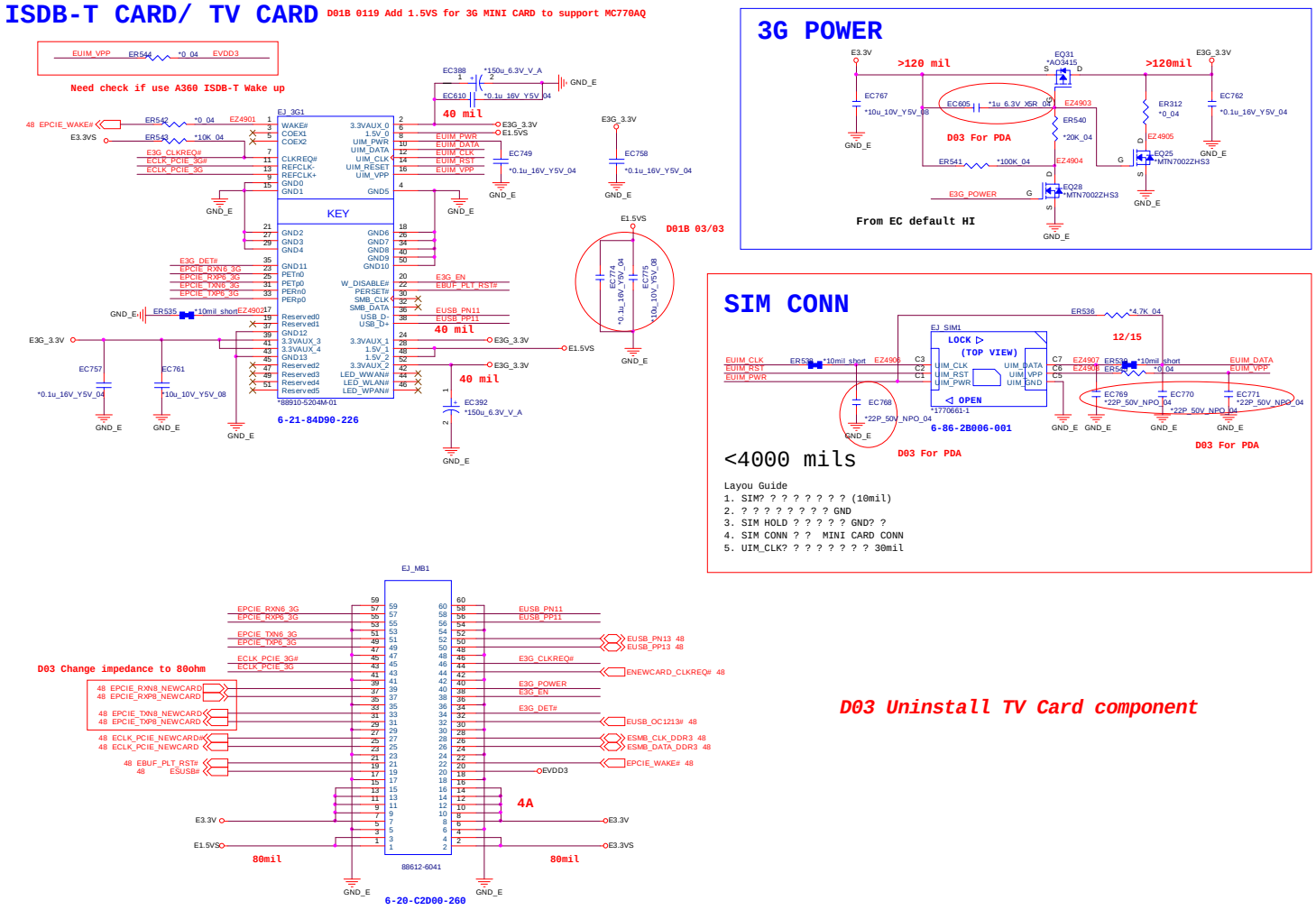

AUDIO BOARD

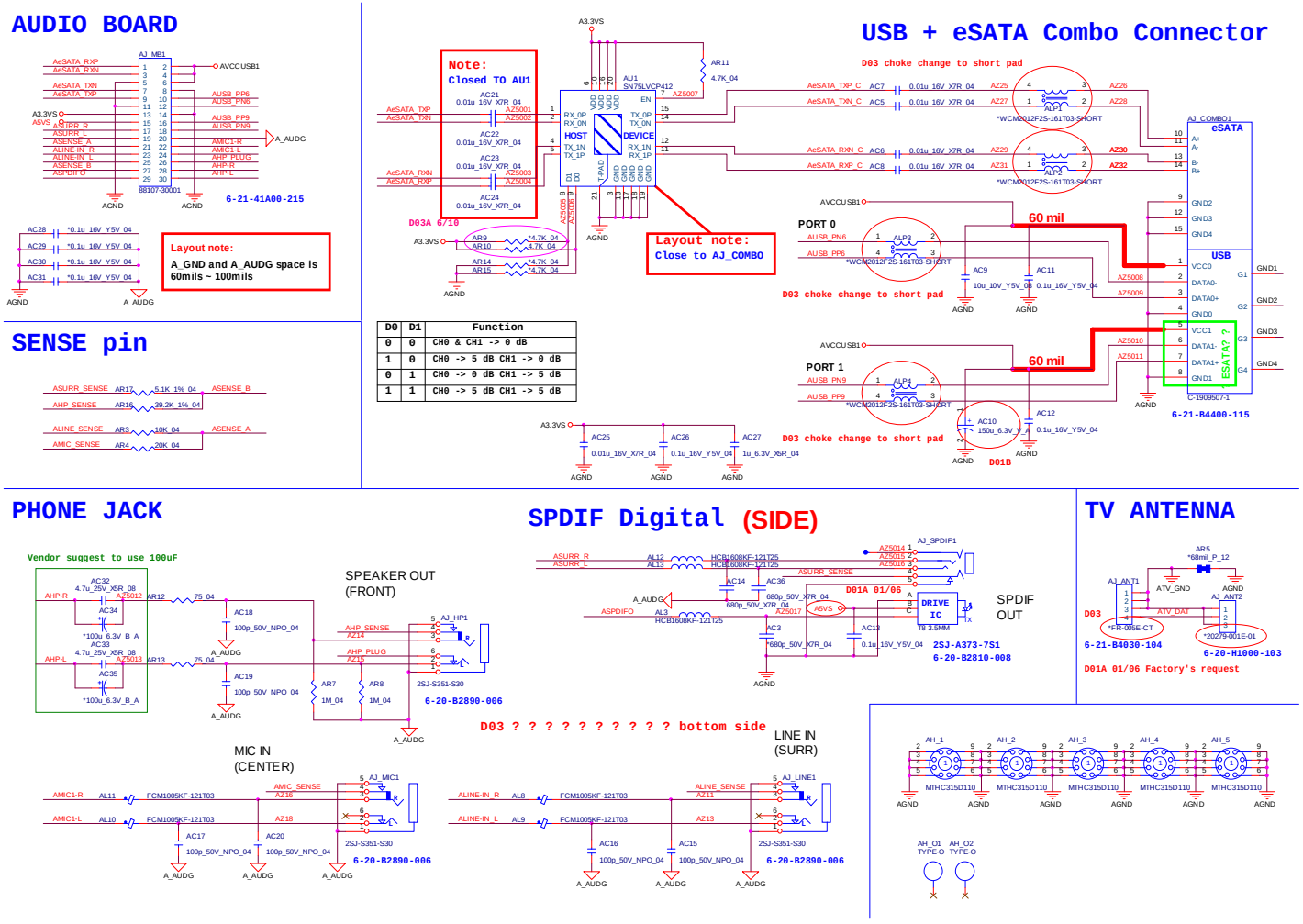

D0	D1	Function
0	0	CH0 & CH1 -> 0 dB
1	0	CH0 -> 5 dB CH1 -> 0 dB
0	1	CH0 -> 0 dB CH1 -> 5 dB
1	1	CH0 -> 5 dB CH1 -> 5 dB

Sheet 50 of 56
AUDIO BOARD

POWER BUTTON BOARD

POWER BUTTON B'D

Sheet 51 of 56
POWER BUTTON BOARD

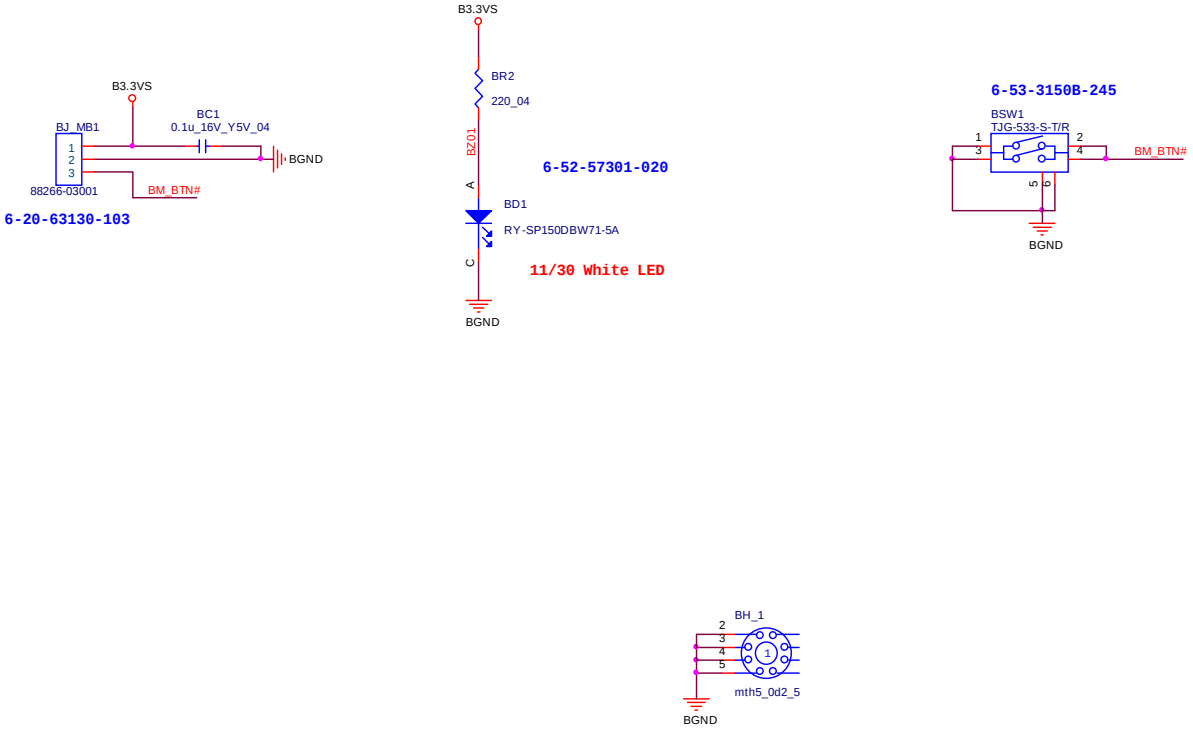

CLICK & FP BOARD

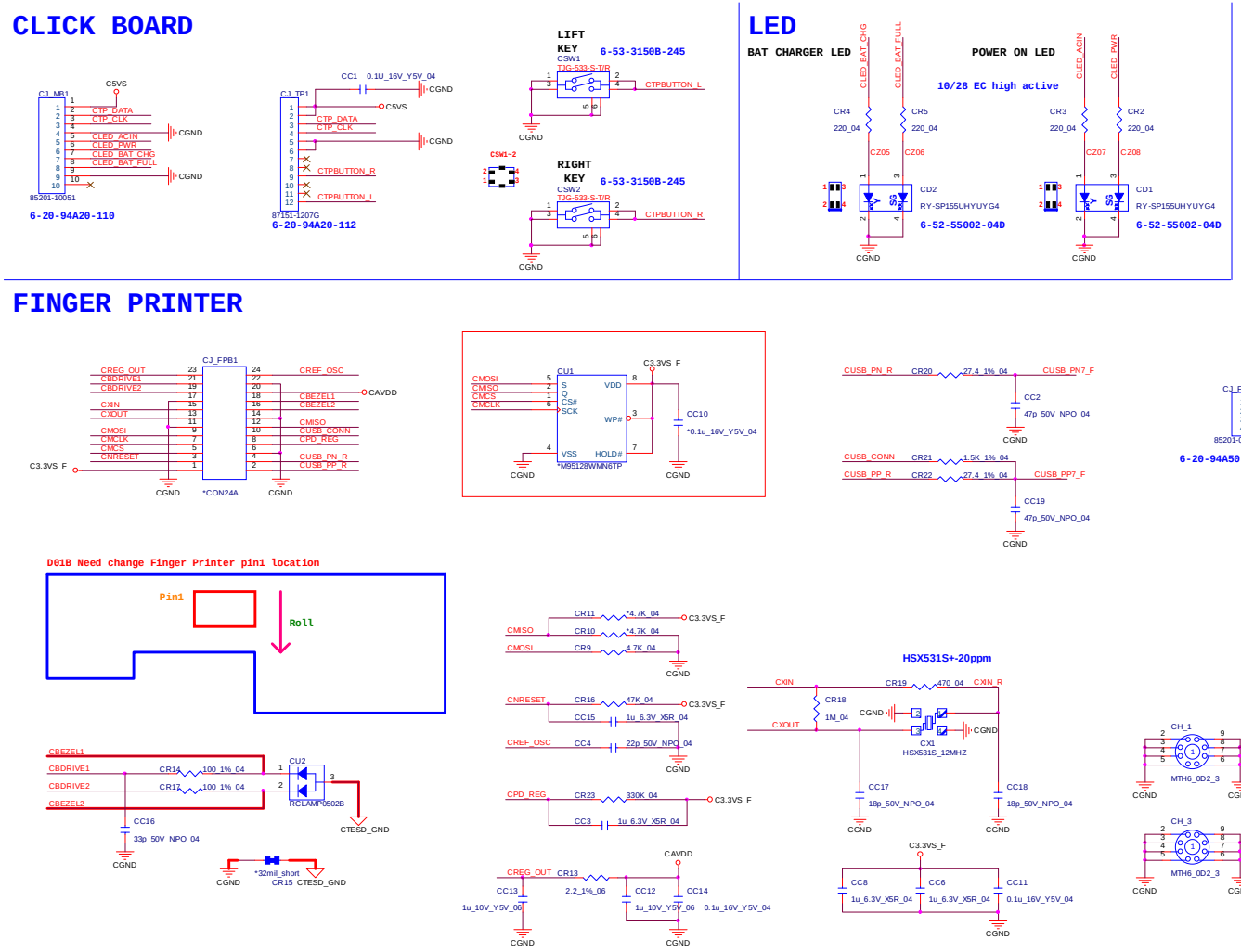

Sheet 52 of 56
CLICK & FP BOARD

GAME KEY BOARD

Sheet 53 of 56
GAME KEY BOARD

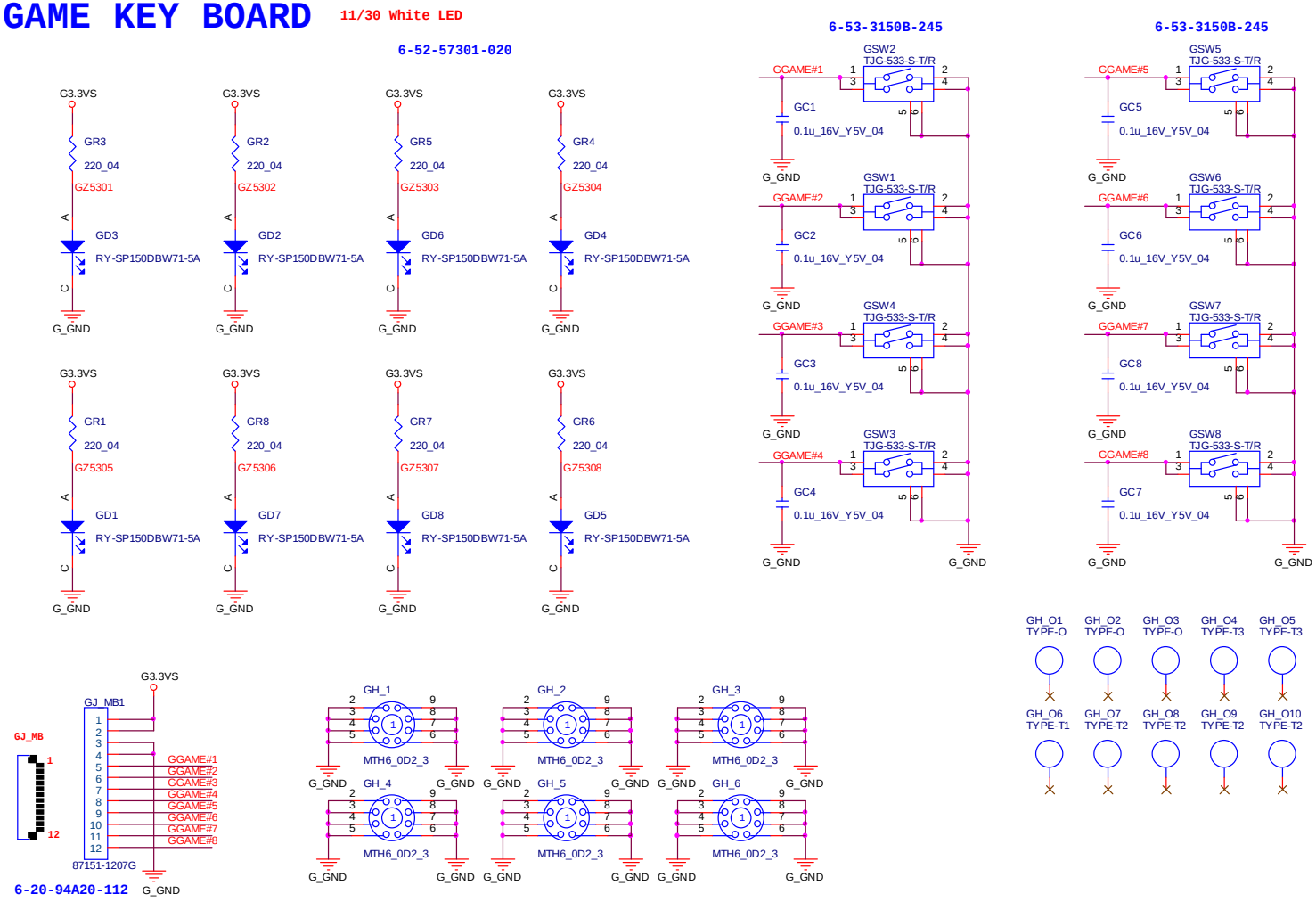

CIR BOARD

CIR BOARD

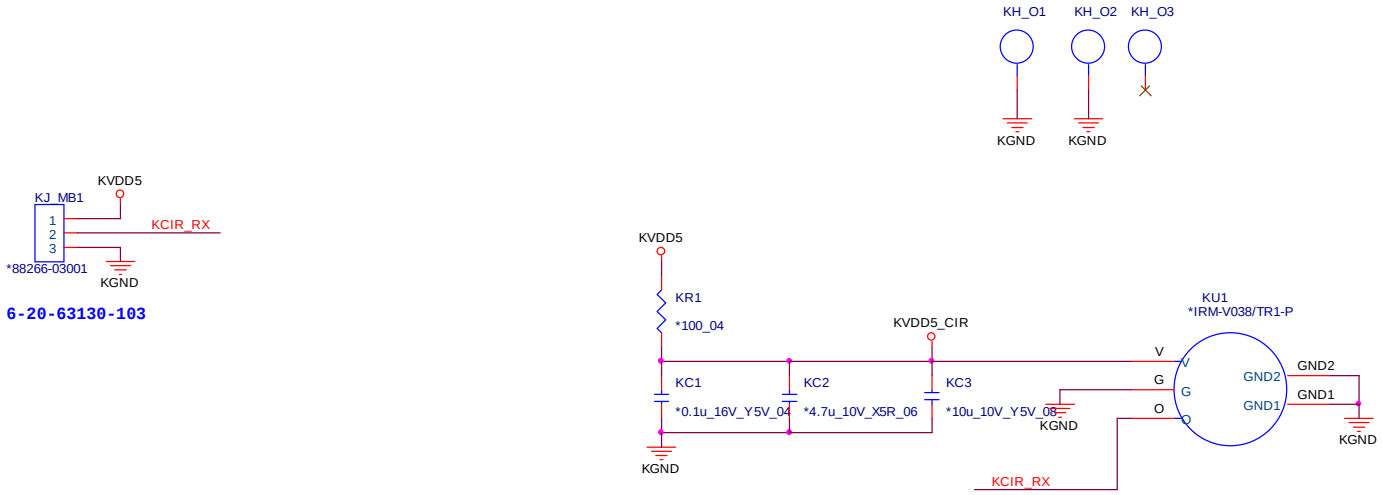

Sheet 54 of 56
CIR BOARD

D03 Uninstall CIR component

FINGER BOARD

Sheet 55 of 56
FINGER BOARD

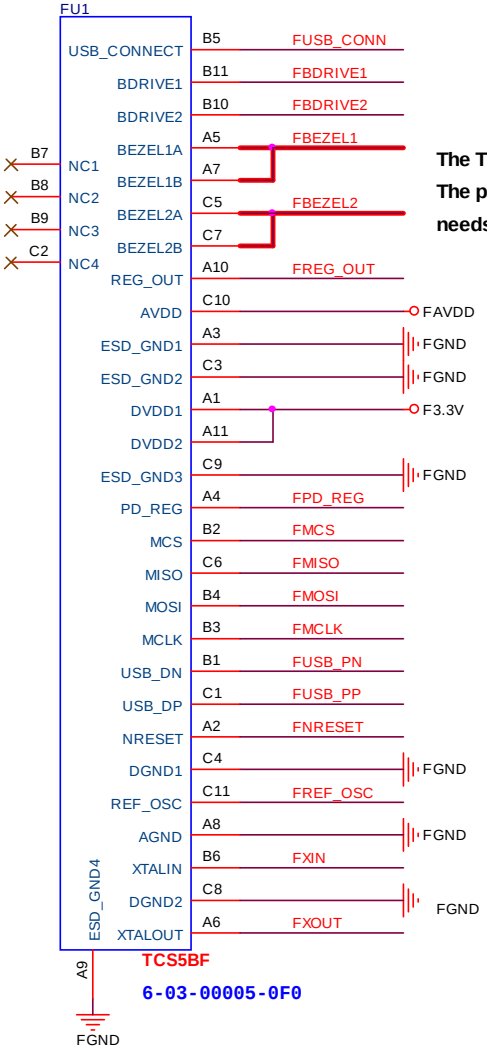

The TESD_GND trace has to be wide (> 20mil)
The path be marked in RED
needs to be design to be short and at low impedance.

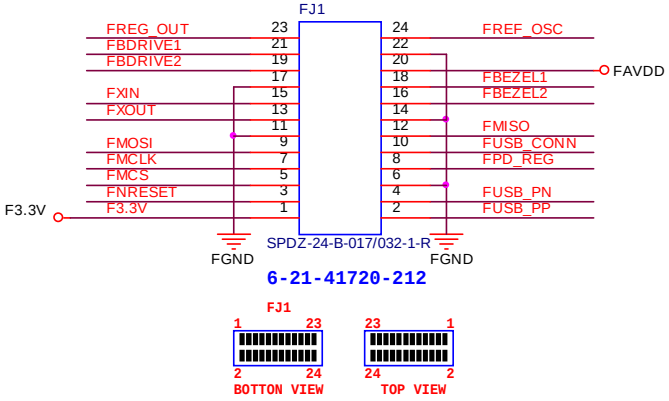

POWER ON SEQUENCE

P180HM D01 EVT POWER ON SEQUENCE

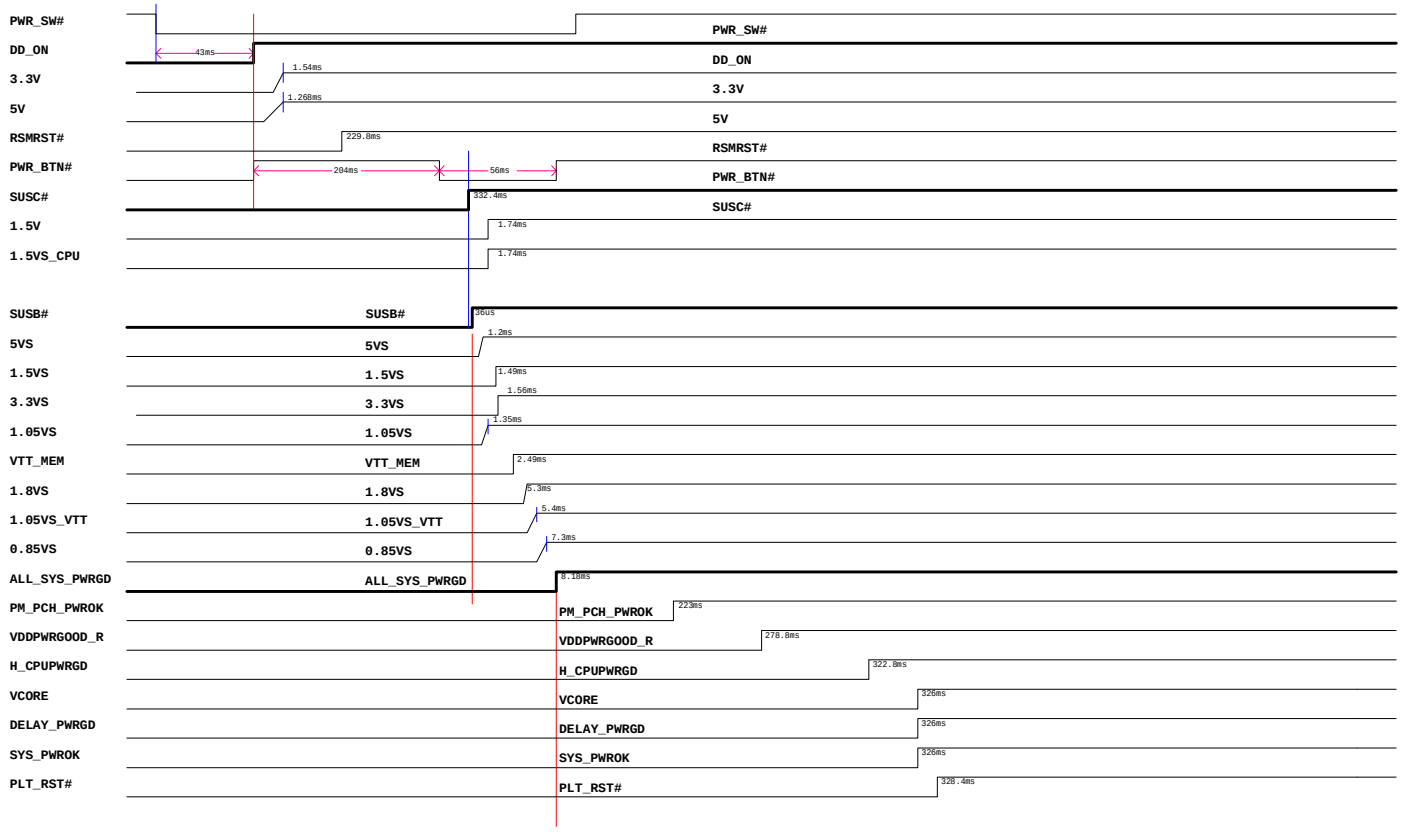

BIOS: 1.00.E1
Test date: 2011/01/03

Sheet 56 of 56
POWER ON SEQUENCE