# SERVICE MANUAL

## W760SUN / W765SUN / W765SUNM

notebook

# Notebook Computer

# W760SUN / W765SUN / W765SUNM

# Service Manual

# Notice

The company reserves the right to revise this publication or to change its contents without notice. Information contained herein is for reference only and does not constitute a commitment on the part of the manufacturer or any subsequent vendor. They assume no responsibility or liability for any errors or inaccuracies that may appear in this publication nor are they in anyway responsible for any loss or damage resulting from the use (or misuse) of this publication.

This publication and any accompanying software may not, in whole or in part, be reproduced, translated, transmitted or reduced to any machine readable form without prior consent from the vendor, manufacturer or creators of this publication, except for copies kept by the user for backup purposes.

Brand and product names mentioned in this publication may or may not be copyrights and/or registered trademarks of their respective companies. They are mentioned for identification purposes only and are not intended as an endorsement of that product or its manufacturer.

Version 1.1
January 2010

## Trademarks

**Intel** and **Intel Core** are trademarks of Intel Corporation.
**Windows**® is a registered trademark of Microsoft Corporation.
Other brand and product names are trademarks and /or registered trademarks of their respective companies.

## About this Manual

This manual is intended for service personnel who have completed sufficient training to undertake the maintenance and inspection of personal computers.

It is organized to allow you to look up basic information for servicing and/or upgrading components of the ***W760SUN*** series notebook PC.

The following information is included:

Chapter 1, Introduction, provides general information about the location of system elements and their specifications.
Chapter 2, Disassembly, provides step-by-step instructions for disassembling parts and subsystems and how to upgrade elements of the system.

Appendix A, Part Lists
Appendix B, Schematic Diagrams
Appendix C, Updating the FLASH ROM BIOS

## IMPORTANT SAFETY INSTRUCTIONS

Follow basic safety precautions, including those listed below, to reduce the risk of fire, electric shock and injury to persons when using any electrical equipment:

1. Do not use this product near water, for example near a bath tub, wash bowl, kitchen sink or laundry tub, in a wet basement or near a swimming pool.
2. Avoid using a telephone (other than a cordless type) during an electrical storm. There may be a remote risk of electrical shock from lightning.
3. Do not use the telephone to report a gas leak in the vicinity of the leak.
4. Use only the power cord and batteries indicated in this manual. Do not dispose of batteries in a fire. They may explode. Check with local codes for possible special disposal instructions.
5. This product is intended to be supplied by a Listed Power Unit with an AC Input of 100 - 240V, 50 - 60Hz, DC Output of 19V, 4.74A (**90** Watts) minimum AC/DC Adapter.

## CAUTION

Always disconnect all telephone lines from the wall outlet before servicing or disassembling this equipment.

## TO REDUCE THE RISK OF FIRE, USE ONLY NO. 26 AWG OR LARGER, TELECOMMUNICATION LINE CORD

### This Computer's Optical Device is a Laser Class 1 Product

## Instructions for Care and Operation

The notebook computer is quite rugged, but it can be damaged. To prevent this, follow these suggestions:

1. **Don't drop it, or expose it to shock.** If the computer falls, the case and the components could be damaged.

| | | |
|---|---|---|
| *Do not expose the computer to any shock or vibration.* | *Do not place it on an unstable surface.* | *Do not place anything heavy on the computer.* 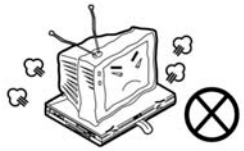 |

2. **Keep it dry, and don't overheat it.** Keep the computer and power supply away from any kind of heating element. This is an electrical appliance. If water or any other liquid gets into it, the computer could be badly damaged.

| | | | |
|---|---|---|---|
| *Do not expose it to excessive heat or direct sunlight.* 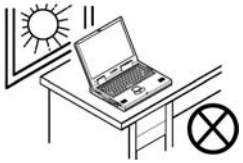 | *Do not leave it in a place where foreign matter or moisture may affect the system.* | *Don't use or store the computer in a humid environment.* | *Do not place the computer on any surface which will block the vents.* 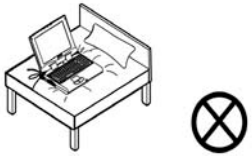 |

3. **Follow the proper working procedures for the computer**. Shut the computer down properly and don't forget to save your work. Remember to periodically save your data as data may be lost if the battery is depleted.

| | | | |
|---|---|---|---|
| *Do not turn off the power until you properly shut down all programs.* | *Do not turn off any peripheral devices when the computer is on.* | *Do not disassemble the computer by yourself.* | *Perform routine maintenance on your computer.* |

4. **Avoid interference.** Keep the computer away from high capacity transformers, electric motors, and other strong magnetic fields. These can hinder proper performance and damage your data.
5. **Take care when using peripheral devices**.

| | |
|---|---|
| *Use only approved brands of peripherals.* 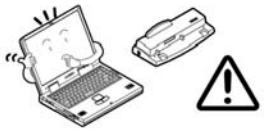 | *Unplug the power cord before attaching peripheral devices.* 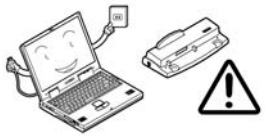 |

## Power Safety

The computer has specific power requirements:

- Only use a power adapter approved for use with this computer.
- Your AC adapter may be designed for international travel but it still requires a steady, uninterrupted power supply. If you are unsure of your local power specifications, consult your service representative or local power company.
- The power adapter may have either a 2-prong or a 3-prong grounded plug. The third prong is an important safety feature; do not defeat its purpose. If you do not have access to a compatible outlet, have a qualified electrician install one.
- When you want to unplug the power cord, be sure to disconnect it by the plug head, not by its wire.
- Make sure the socket and any extension cord(s) you use can support the total current load of all the connected devices.
- Before cleaning the computer, make sure it is disconnected from any external power supplies.

**Power Safety Warning**

Before you undertake any upgrade procedures, make sure that you have turned off the power, and disconnected all peripherals and cables (including telephone lines). It is advisable to also remove your battery in order to prevent accidentally turning the machine on.

| | | |
|---|---|---|
| *Do not plug in the power cord if you are wet.* | *Do not use the power cord if it is broken.* 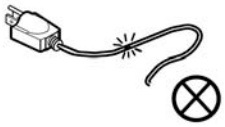 | *Do not place heavy objects on the power cord.* 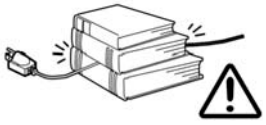 |

## Battery Precautions

- Only use batteries designed for this computer. The wrong battery type may explode, leak or damage the computer.
- Do not remove any batteries from the computer while it is powered on.
- Do not continue to use a battery that has been dropped, or that appears damaged (e.g. bent or twisted) in any way. Even if the computer continues to work with a damaged battery in place, it may cause circuit damage, which may possibly result in fire.
- Recharge the batteries using the notebook's system. Incorrect recharging may make the battery explode.
- Do not try to repair a battery pack. Refer any battery pack repair or replacement to your service representative or qualified service personnel.
- Keep children away from, and promptly dispose of a damaged battery. Always dispose of batteries carefully. Batteries may explode or leak if exposed to fire, or improperly handled or discarded.
- Keep the battery away from metal appliances.
- Affix tape to the battery contacts before disposing of the battery.
- Do not touch the battery contacts with your hands or metal objects.

**Battery Disposal**

The product that you have purchased contains a rechargeable battery. The battery is recyclable. At the end of its useful life, under various state and local laws, it may be illegal to dispose of this battery into the municipal waste stream. Check with your local solid waste officials for details in your area for recycling options or proper disposal.

**Caution**

Danger of explosion if battery is incorrectly replaced. Replace only with the same or equivalent type recommended by the manufacturer. Discard used battery according to the manufacturer's instructions.

## Related Documents

You may also need to consult the following manual for additional information:

User's Manual on CD
This describes the notebook PC's features and the procedures for operating the computer and its ROM-based setup program. It also describes the installation and operation of the utility programs provided with the notebook PC.

# Contents


## Introduction .....1-1

Overview .....1-1
System Specifications .....1-2
External Locator - Top View with LCD Panel Open .....1-5
External Locator - Front & Right side Views .....1-6
External Locator - Left Side & Rear View .....1-7
External Locator - Bottom View .....1-8
Mainboard Overview - Top (Key Parts) .....1-9
Mainboard Overview - Bottom (Key Parts) .....1-10
Mainboard Overview - Top (Connectors) .....1-11
Mainboard Overview - Bottom (Connectors) .....1-12

## Disassembly .....2-1

Overview .....2-1
Maintenance Tools .....2-2
Connections .....2-2
Maintenance Precautions .....2-3
Disassembly Steps .....2-4
Removing the Battery .....2-5
Removing the Hard Disk Drive .....2-6
Removing the Optical (CD/DVD) Device .....2-8
Removing the System Memory (RAM) .....2-9
Removing the Inverter Board .....2-11
Removing and Installing the Processor .....2-12
Removing the Wireless LAN Module .....2-15
Removing the Bluetooth Module .....2-16
Removing the Keyboard .....2-17
Removing the Modem .....2-18
Removing the LCD Back Cover .....2-20

## Part Lists .....A-1

Part List Illustration Location ..... A-2
Top with Fingerprint (W760SUN) ..... A-3
Top with Fingerprint (W765SUN) ..... A-4
Top without Fingerprint (W760SUN) ..... A-5
Top without Fingerprint (W765SUN) ..... A-6
Bottom ..... A-7
LCD ..... A-8
HDD ..... A-9
SATA DVD SUPER-MULTI ..... A-10

## Schematic Diagrams.....B-1

System Block Diagram .....B-2
Penryn (Socket-P) 1/2 .....B-3
Penryn (Socket-P) 2/2 .....B-4
SiSM672 Host, PCIE 1/5 .....B-5
SiSM672 DRAM 2/5 .....B-6
SiSM672 MuTIOL VGA 3/5 .....B-7
SiSM672 PWR 4/5 .....B-8
SiSM672 GND 5/5 .....B-9
DDRII SO-DIMM - 1 .....B-10
DDRII SO-DIMM - 2 .....B-11
External VGA N10M-GE1-1 .....B-12
External VGA N10M-GE1-2 .....B-13
External VGA N10M-GE1-3 .....B-14
External VGA N10M-GE1-4 .....B-15
External VGA N10M-GE1-5 .....B-16
External VGA N10M-GE1-6 .....B-17
External VGA N10M-GE1-7 .....B-18
Panel, CRT .....B-19
Inverter, Bluetooth, Fan .....B-20
968 PCI, IDE, MuTIOL, SPI 1/4 .....B-21

968 PCIE, LAN, GPIO 2/4 ..... B-22
968 USB SATA 3/4 ..... B-23
968 PWR, GND 4/4 ..... B-24
Clock Generator & Clock Buffer ..... B-25
PHY Realtek 8201CL ..... B-26
KBC ITE8512E ..... B-27
JMB385, Card Reader ..... B-28
Audio Codec ALC662 ..... B-29
Audio AMP ..... B-30
SATA HDD, PWR, LID ..... B-31
Multi I/O, ODD, 3G, Click BD for M74 ..... B-32
New Card, Mini PCIE, USB ..... B-33
LED, PC Beep, TP, FP ..... B-34
System/Ext-VGA Power ..... B-35
AC-IN, Charger ..... B-36
VCORE ..... B-37
VDD3, VDD5) ..... B-38
1.05VS, 1.2V, 1.5V ..... B-39
1.8V, 0.9VS ..... B-40
Click BD, Finger BD for M76 ..... B-41
Multi Function Board ..... B-42
Audio Board ..... B-43
Finger Sensor Board ..... B-44
Power Switch Board for M74 ..... B-45
External ODD Board for W76 ..... B-46

**Updating the FLASH ROM BIOS..... C-1**

Download the BIOS ..... 2-1
Unzip the downloaded files to a bootable CD/DVD/ or
USB Flash drive ..... 2-1
Set the computer to boot from the external drive ..... 2-1
Use the flash tools to update the BIOS ..... 2-2
Restart the computer (booting from the HDD) ..... 2-2

# Chapter 1: Introduction

## Overview

This manual covers the information you need to service or upgrade the ***W760SUN/W765SUN/W765SUNM*** series notebook computer. Information about operating the computer (e.g. getting started, and the *Setup* utility) is in the *User's Manual*. Information about drivers (e.g. VGA & audio) is also found in *User's Manual*. That manual is shipped with the computer.

Operating systems (e.g. *Windows XP*, *Windows Vista*, etc.) have their own manuals as do application software (e.g. word processing and database programs). If you have questions about those programs, you should consult those manuals.

The ***W760SUN/W765SUN/W765SUNM*** series notebook is designed to be upgradeable. See ***Disassembly on page 2 - 1*** for a detailed description of the upgrade procedures for each specific component. Please note the warning and safety information indicated by the "🔔" symbol.

The balance of this chapter reviews the computer's technical specifications and features.

# System Specifications

| Feature | Specification | |
|---|---|---|
| **Processor** | Intel® Core™2 Duo Processor<br>(478-pin) Micro-FC-PGA Package, Socket P<br>**T8100/ T8300** | 45nm (45 Nanometer) Process Technology<br>3MB On-die L2 Cache & 800MHz FSB<br>2.1/ 2.4 GHz |
| | Intel® Core™2 Duo Processor<br>(478-pin) Micro-FC-PGA Package, Socket P<br>**T9300/ T9500** | 45nm (45 Nanometer) Process Technology<br>6MB On-die L2 Cache & 800MHz FSB<br>2.5/ 2.6 GHz |
| | Intel® Core™2 Duo Processor<br>(478-pin) Micro-FC-PGA Package, Socket P<br>**T7100/ T7250** | 65nm (65 Nanometer) Process Technology<br>2MB On-die L2 Cache & 800MHz FSB<br>1.80/ 2.0 GHz |
| | Intel® Core™2 Duo Processor<br>(478-pin) Micro-FC-PGA Package, Socket P<br>**T7300/ T7500/ T7700/ T7800** | 65nm (65 Nanometer) Process Technology<br>4MB On-die L2 Cache & 800MHz FSB<br>2.0/ 2.2/ 2.4/ 2.6 GHz |
| | Intel® Celeron® M Processor<br>(478-pin) Micro-FCPGA Package, Socket P<br>**T1600/ T1700** | 65nm (65 Nanometer) Process Technology<br>1MB On-die L2 Cache & 667MHz FSB<br>1.66/ 1.86 GHz |
| | Intel® Celeron® M Processor<br>(478-pin) Micro-FCPGA Package, Socket P<br>**575/ 585** | 65nm (65 Nanometer) Process Technology<br>1MB On-die L2 Cache & 667MHz FSB<br>2.0/ 2.16 GHz |
| | Intel® Celeron® M Processor<br>(478-pin) Micro-FCPGA Package, Socket P<br>**530/ 540/ 550/ 560** | 65nm (65 Nanometer) Process Technology<br>1MB On-die L2 Cache & 533MHz FSB<br>1.73/ 1.86/ 2.0/ 2.13 GHz |
| **Core Logic** | SiS M671DX + SiS968 Chipset | |
| **LCD** | 15.6" HD TFT LCD | |
| **Video Adapter** | **nVIDIA GeForce G 105M Discrete Graphics On-Board**<br>**512MB** of GDDR2 Video Memory On-Board<br>TurboCache™ Supporting Total Graphics Memory up to **512MB** (depending on system memory)<br>Supports DirectX 10.0 | |

| Feature | Specification | |
|---|---|---|
| **Memory** | 64-bit Wide **DDRII (DDR2)** Data Channel<br>Two 200 Pin SO-DIMM Sockets Supporting **DDRII (DDR2**) **667MHz**<br>Memory Expandable up to **4GB** (1024MB/ 2048MB **DDRII** Modules) | |
| **Security** | Security (Kensington® Type) Lock Slot<br>Fingerprint ID Reader Module (**Factory Option**) | BIOS Password |
| **BIOS** | One 8Mb SPI Flash ROM | Phoenix™ BIOS |
| **Storage** | One Changeable 12.7mm(h) Optical Device (CD/DVD) Type Drive (See ?$paratext>? on page 4.)<br>Easy Changeable 2.5" 9.5 mm (h) **SATA** (Serial) HDD | |
| **Audio** | High Definition Audio (HDA)<br>Compliant with Microsoft UAA (Universal Audio Architecture) | Direct Sound 3D™ Compatible<br>2 * Built-In Speakers<br>Built-In Microphone |
| **Keyboard & Pointing Device** | Winkey Keyboard | Built-In TouchPad with Scrolling Function |
| **Interface** | Three USB 2.0 Ports<br>One Headphone-Out Jack<br>One Microphone-In Jack<br>One S/PDIF-Out Jack | One RJ-11 Modem Jack<br>One RJ-45 LAN Jack<br>One DC-In Jack<br>One External Monitor Port |
| **Card Reader** | Embedded 7-in-1 Card Reader (MS/ MS Pro/ SD/ Mini SD/ MMC/ RS MMC/ MS Duo)<br>**Note:** MS Duo/ Mini SD/ RS MMC Cards require a PC adapter | |
| **ExpressCard Slot** | One ExpressCard/34(54) Slot | **Two Mini-Card Slots with USB interface:**<br>Slot 1 for WLAN Module<br>Slot 2 for 3.5G Module (**Factory Option**) |
| **Power Management** | Supports ACPI 3.0<br>Supports Wake on LAN | Supports Wake on USB<br>Supports Resume from Modem Ring |

| Feature | Specification | |
|---|---|---|
| **Communication**<br><br>**UMTS Modes**<br>Note that UMTS modes CAN NOT be used in North America. | 10M/100Mb Base-T Ethernet LAN<br>56K MDC Modem V.90 & V.92 Compliant<br>802.11b/g Wireless LAN Mini-Card Module with USB interface (**Option**)<br>Bluetooth 2.1 + EDR (Enhanced Data Rate) Module (**Factory Option**)<br>1.3M (UVC or non UVC) or 2.0M Pixel USB PC Camera Module (**Factory Option**)<br><br>**3.5G Module:**<br>UMTS/HSPDA-based 3.5G Module with Mini-Card Interface (**Factory Option**)<br>Quad-band GSM/GPRS (850 MHz, 900 MHz, 1800 MHz, 1900 MHz)<br>UMTS WCDMA FDD (2100 MHz) | |
| **Power** | Full Range AC/DC Adapter AC input 100 - 240V, 50 - 60Hz, DC Output 19V, 4.74A (**90** Watts) | |
| **Battery** | 6 Cell Smart Lithium-Ion Battery Pack, 4400mAH<br><br>9 Cell Smart Lithium-Ion Battery Pack, 7200mAH (**Option**) | |
| **Environmental Spec** | Temperature<br>Operating: 5°C - 35°C<br>Non-Operating: -20°C - 60°C | Relative Humidity<br>Operating: 20% - 80%<br>Non-Operating: 10% - 90% |
| **Dimensions & Weight** | 374mm (w) * 256mm (d) * 25 - 37.9mm (h)<br>2.7 kg With 6 Cell Battery | |
| **Optional** | Optical Drive Module Options:<br>DVD Dual (Super Multi) Drive Module<br><br>802.11b/g Wireless LAN Mini-Card Module with USB interface<br><br>9 Cell Smart Lithium-Ion Battery Pack<br><br>1.3M (UVC or non UVC) or 2.0M Pixel USB PC Camera Module (**Factory Option**)<br><br>Fingerprint ID Reader Module (**Factory Option**) | *Bluetooth 2.1 + EDR (Enhanced Data Rate) Module (**Factory Option**)<br>OR<br>*UMTS/HSPDA-based 3.5G Module with Mini-Card Interface (**Factory Option**)<br><br>***Note**: The **Bluetooth** and **3.75G/HSPA Optional Modules** cannot coexist. If one of the factory options is included in your purchase option, then the other is **unavailable**. |

# External Locator - Top View with LCD Panel Open

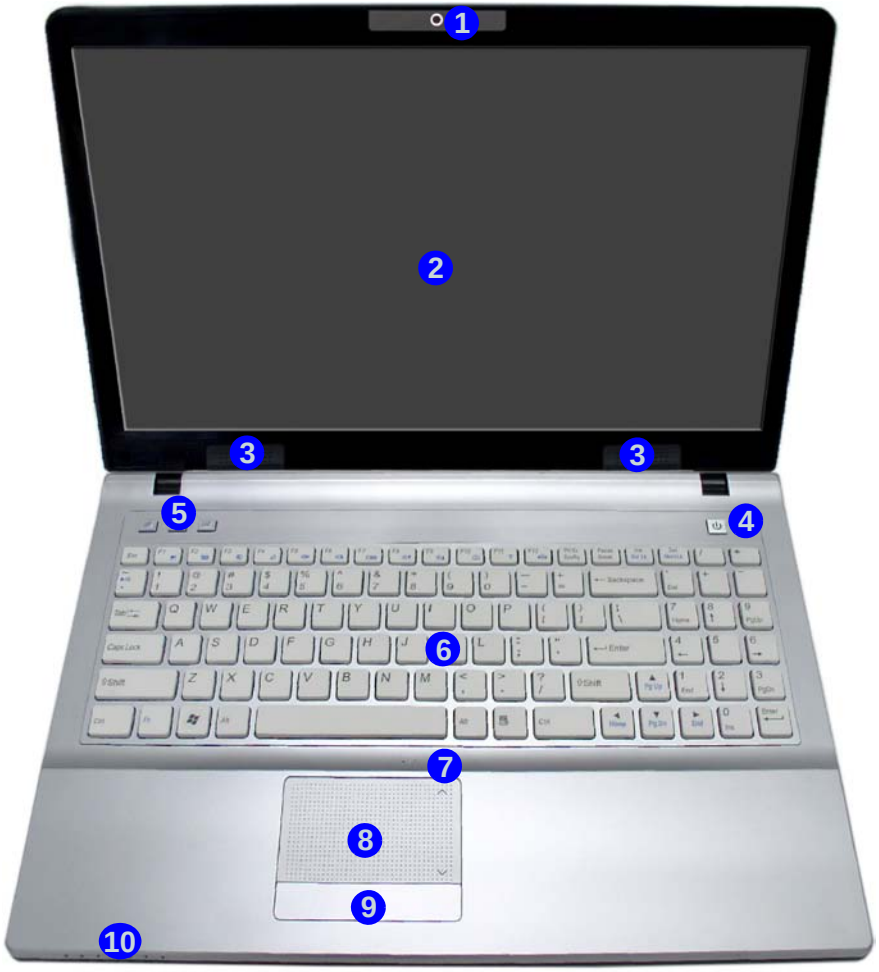


*Figure 1*
**Top View**

1. Optional Built-In PC Camera
2. LCD
3. Speakers
4. Power Button
5. Hot Key Buttons
6. Keyboard
7. Built-In Microphone
8. Touchpad & Buttons
9. Fingerprint Module (Optional)
10. LED Indicators

# External Locator - Front & Right side Views

*Figure 2*
**Front Views**

1. LED Power & Communication Indicators

*Figure 3*
**Right Side Views**

1. S/PDIF-Out Jack
2. Microphone-In Jack
3. Headphone-Out Jack
4. USB 2.0 Port
5. Optical Device Drive Bay
6. RJ-11 Phone Jack
7. Security Lock Slot

# External Locator - Left Side & Rear View

*Figure 4*
**Left Side View**

1. DC-In Jack
2. External Monitor Port
3. RJ-45 LAN Jack
4. Vent
5. 2 * USB 2.0 Ports
6. ExpressCard Slot
7. 7-in-1 Card Reader

*Figure 5*
**Rear View**

1. Battery

# External Locator - Bottom View

*Figure 6*
**Bottom View**

1. Battery
2. RAM & CPU Bay Cover
3. Vent/Fan Intake/ Outlet
4. Hard Disk Bay Cover

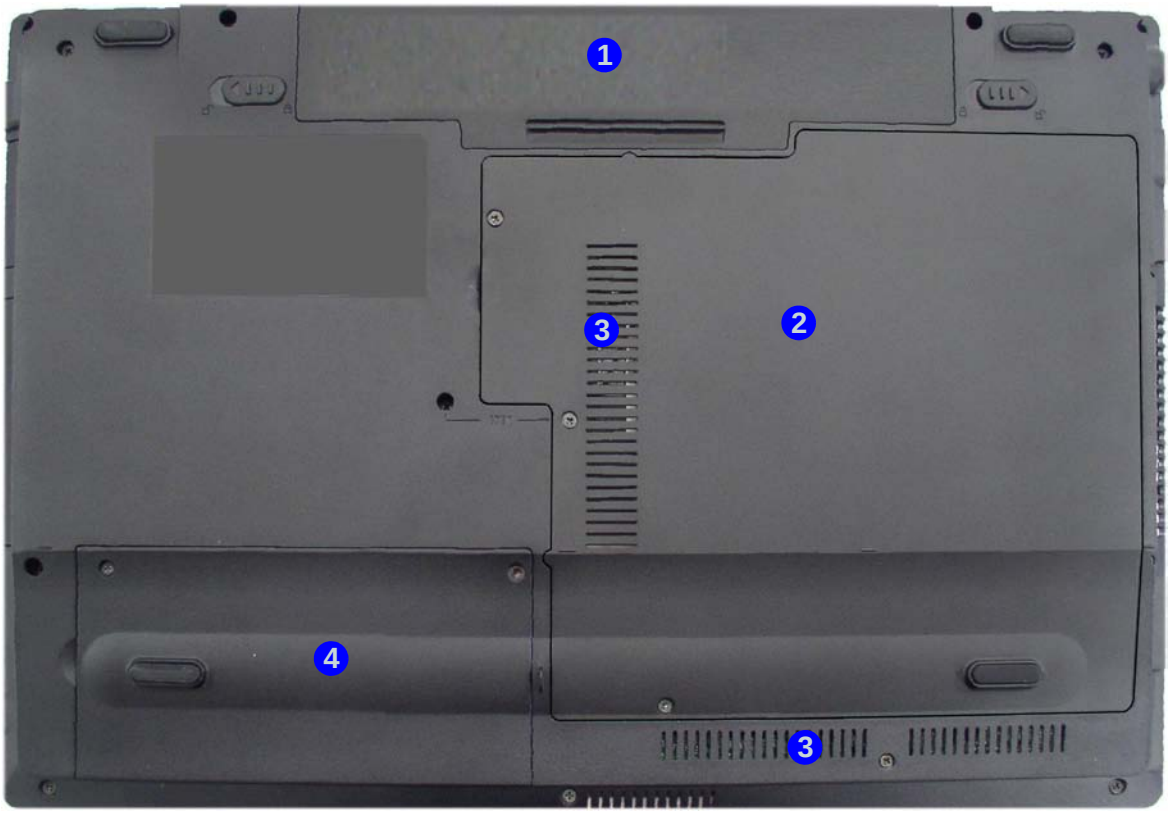




**Overheating**

To prevent your computer from overheating make sure nothing blocks the vent/fan intakes while the computer is in use.

# Mainboard Overview - Top (Key Parts)

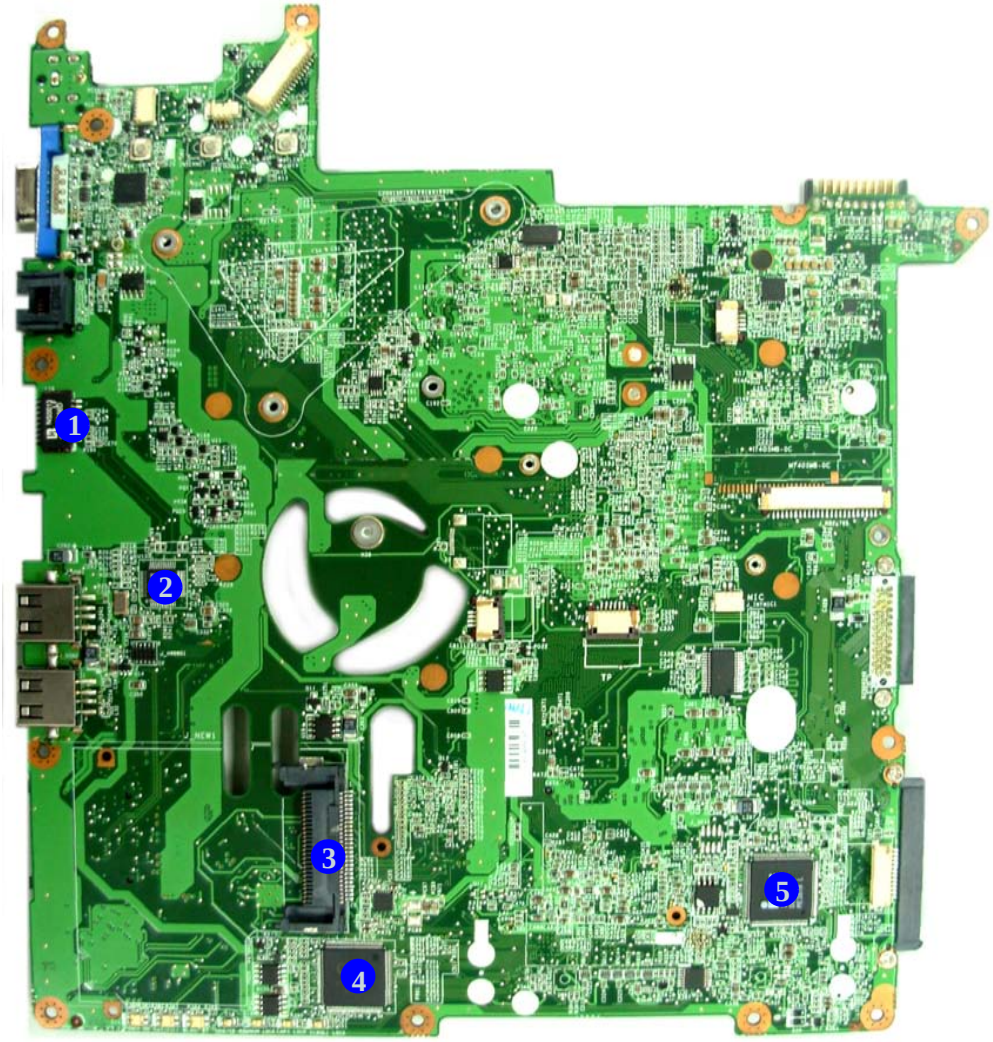


*Figure 7*
**Mainboard Top Key Parts**

1. Transformer
2. VT6103L
3. ExpressCard Connector
4. ENE MR510
5. KBC ITE IT8512E

# Mainboard Overview - Bottom (Key Parts)

*Figure 8*
**Mainboard Bottom Key Parts**

1. VGA Chip
2. CPU Socket (no CPU installed)
3. North Bridge
4. Memory Slots DDR2 SO-DIMM
5. ICS
6. Card Reader Socket
7. South Bridge
8. Audio Codec
9. Mini-Card Slot (WLAN Module)
10. Turbo Memory Slot

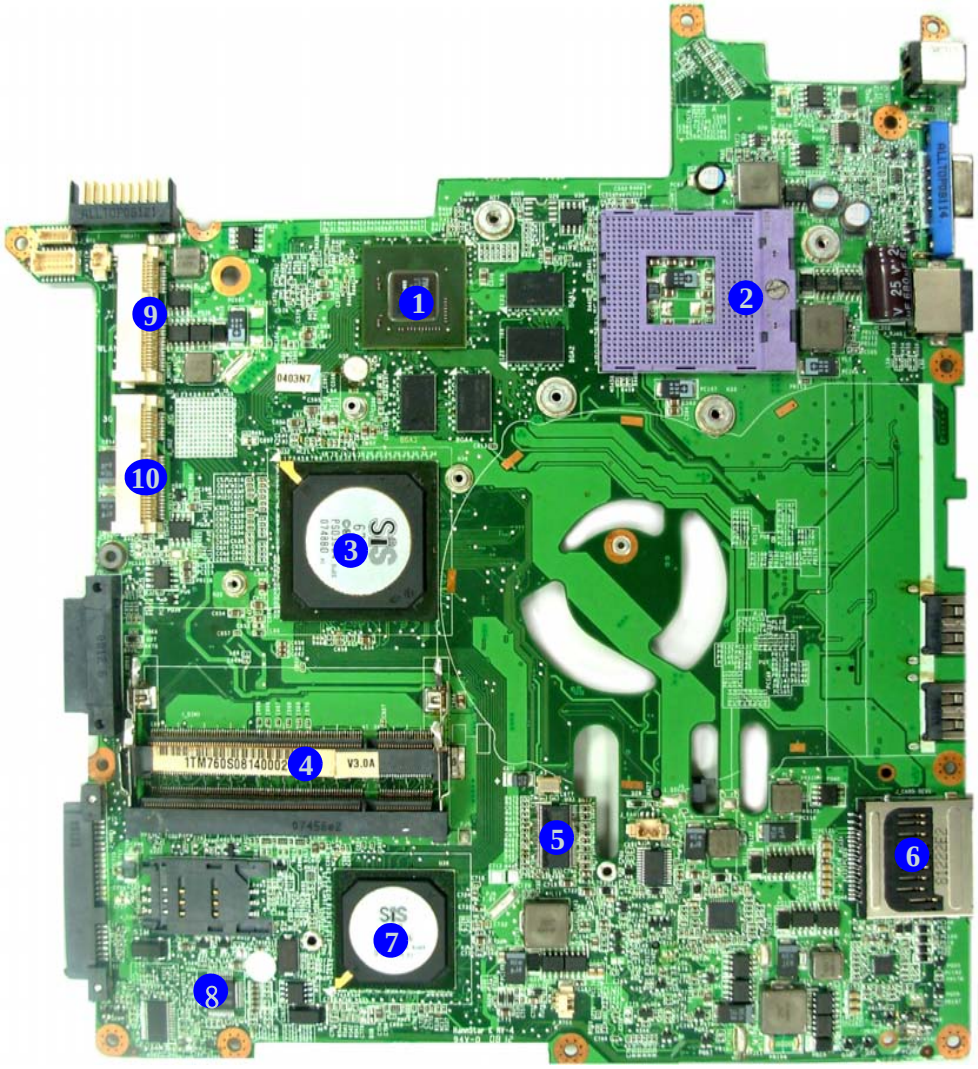

# Mainboard Overview - Top (Connectors)

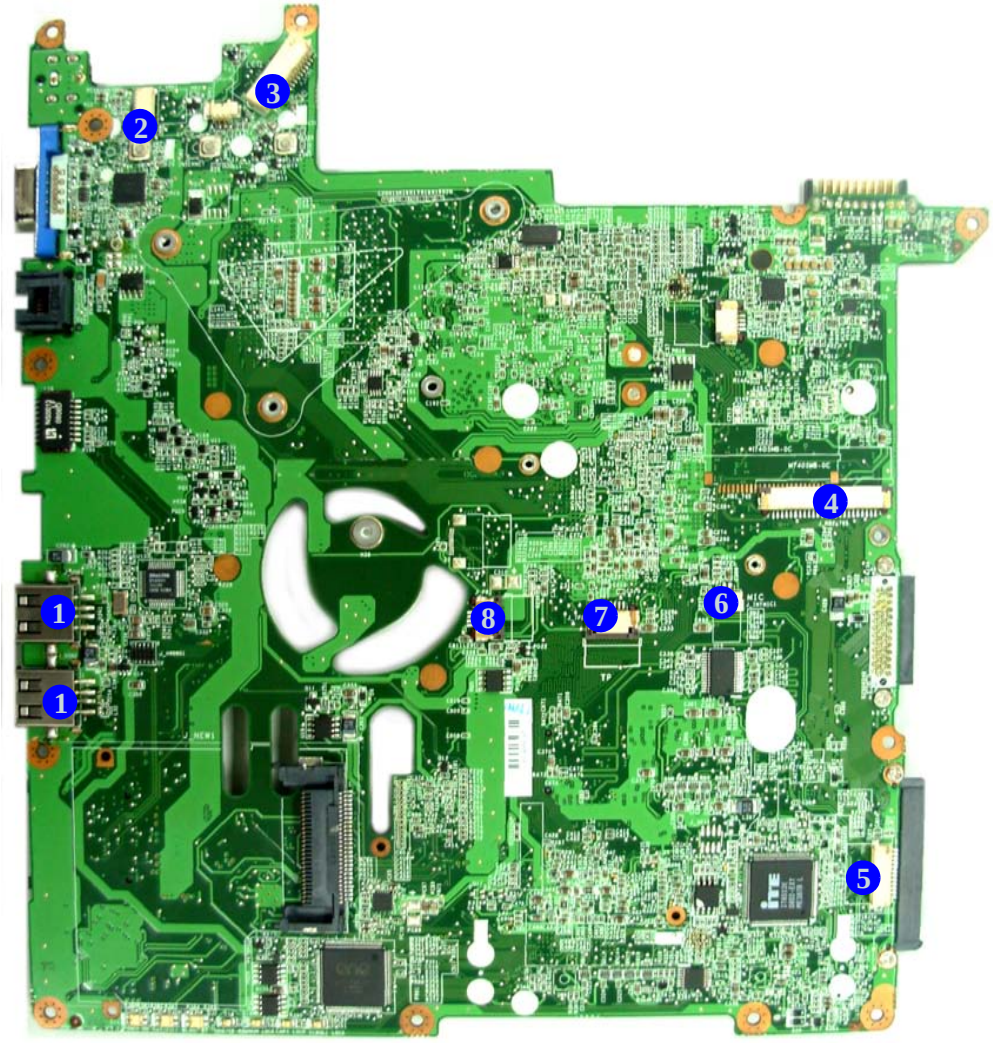


*Figure 9*
**Mainboard Top Connectors**

1. USB Port
2. Hot-key board Connector
3. LCD Cable Connector
4. Keyboard Cable Connector
5. Audio Board Connector
6. Microphone Cable Connector
7. TouchPad Cable Connector
8. Fingerprint Cable Connector

# Mainboard Overview - Bottom (Connectors)

*Figure 10*
**Mainboard Bottom Connectors**

1. BT Cable Connector
2. Multi Board Connector
3. CD-ROM Connector
4. HDD Connector
5. CMOS Bat. Connector
6. CPU Fan Cable Connector
7. DC-In Jack

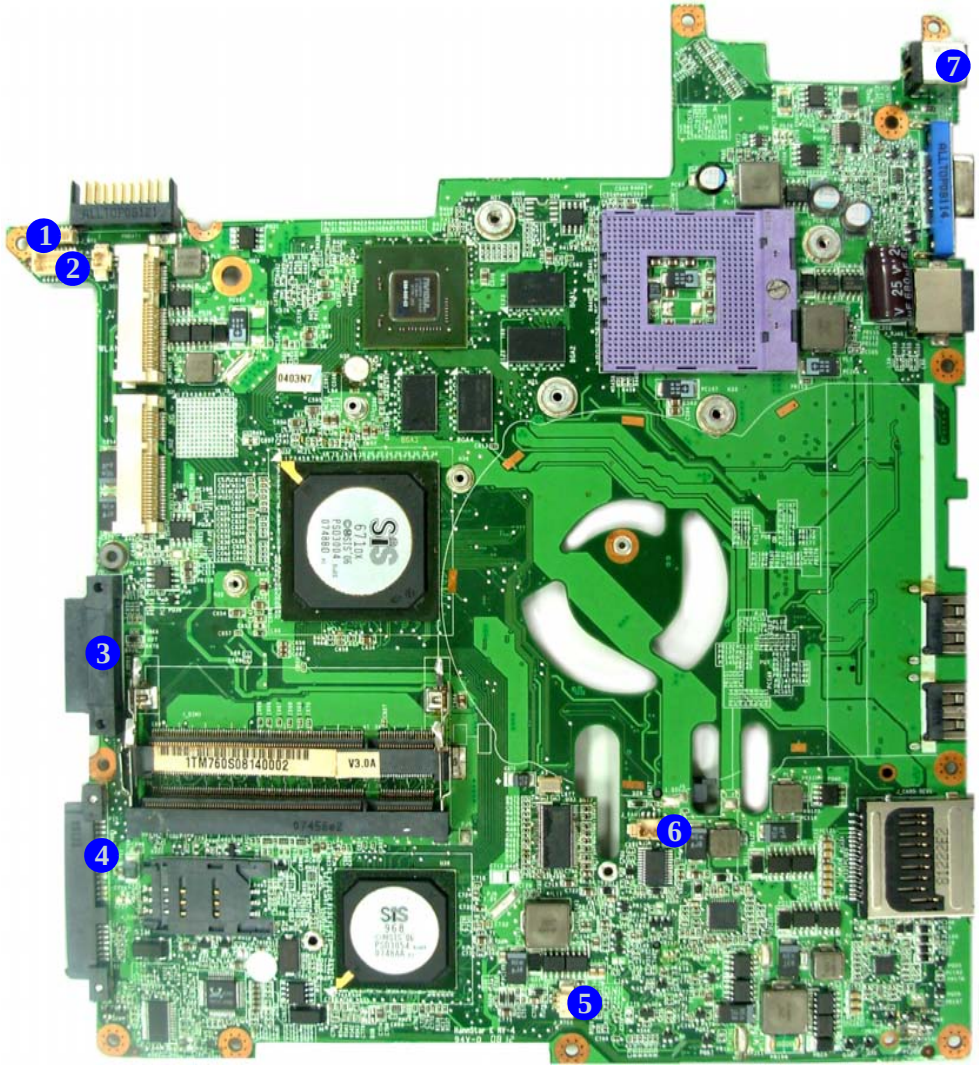

# Chapter 2: Disassembly

## Overview

This chapter provides step-by-step instructions for disassembling the *W760SUN/W765SUN/W765SUNM* series notebook's parts and subsystems. When it comes to reassembly, reverse the procedures (unless otherwise indicated).

We suggest you completely review any procedure before you take the computer apart.

Procedures such as upgrading/replacing the RAM, optical device and hard disk are included in the User's Manual but are repeated here for your convenience.

To make the disassembly process easier each section may have a box in the page margin. Information contained under the figure # will give a synopsis of the sequence of procedures involved in the disassembly procedure. A box with a lists the relevant parts you will have after the disassembly process is complete. **Note**: The parts listed will be for the disassembly procedure listed ONLY, and not any previous disassembly step(s) required. Refer to the part list for the previous disassembly procedure. The amount of screws you should be left with will be listed here also.

A box with a will also provide any possible helpful information. A box with a contains warnings.

An example of these types of boxes are shown in the sidebar.

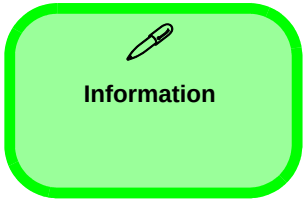


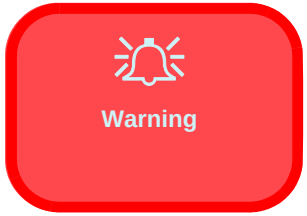

**NOTE**: All disassembly procedures assume that the system is turned **OFF**, and disconnected from any power supply (the battery is removed too).

## Maintenance Tools

The following tools are recommended when working on the notebook PC:

- M3 Philips-head screwdriver
- M2.5 Philips-head screwdriver (magnetized)
- M2 Philips-head screwdriver
- Small flat-head screwdriver
- Pair of needle-nose pliers
- Anti-static wrist-strap

## Connections

Connections within the computer are one of four types:

| | |
|---|---|
| Locking collar sockets for ribbon connectors | To release these connectors, use a small flat-head screwdriver to gently pry the locking collar away from its base. When replacing the connection, make sure the connector is oriented in the same way. The pin1 side is usually not indicated. |
| Pressure sockets for multi-wire connectors | To release this connector type, grasp it at its head and gently rock it from side to side as you pull it out. Do not pull on the wires themselves. When replacing the connection, do not try to force it. The socket only fits one way. |
| Pressure sockets for ribbon connectors | To release these connectors, use a small pair of needle-nose pliers to gently lift the connector away from its socket. When replacing the connection, make sure the connector is oriented in the same way. The pin1 side is usually not indicated. |
| Board-to-board or multi-pin sockets | To separate the boards, gently rock them from side to side as you pull them apart. If the connection is very tight, use a small flat-head screwdriver - use just enough force to start. |

## Maintenance Precautions

The following precautions are a reminder. To avoid personal injury or damage to the computer while performing a removal and/or replacement job, take the following precautions:

1. **Don't drop it**. Perform your repairs and/or upgrades on a stable surface. If the computer falls, the case and other components could be damaged.
2. **Don't overheat it**. Note the proximity of any heating elements. Keep the computer out of direct sunlight.
3. **Avoid interference**. Note the proximity of any high capacity transformers, electric motors, and other strong magnetic fields. These can hinder proper performance and damage components and/or data. You should also monitor the position of magnetized tools (i.e. screwdrivers).
4. **Keep it dry**. This is an electrical appliance. If water or any other liquid gets into it, the computer could be badly damaged.
5. **Be careful with power**. Avoid accidental shocks, discharges or explosions.
   - Before removing or servicing any part from the computer, turn the computer off and detach any power supplies.
   - When you want to unplug the power cord or any cable/wire, be sure to disconnect it by the plug head. Do not pull on the wire.
6. **Peripherals** – Turn off and detach any peripherals.
7. **Beware of static discharge**. ICs, such as the CPU and main support chips, are vulnerable to static electricity. Before handling any part in the computer, discharge any static electricity inside the computer. When handling a printed circuit board, do not use gloves or other materials which allow static electricity buildup. We suggest that you use an anti-static wrist strap instead.
8. **Beware of corrosion**. As you perform your job, avoid touching any connector leads. Even the cleanest hands produce oils which can attract corrosive elements.
9. **Keep your work environment clean**. Tobacco smoke, dust or other air-born particulate matter is often attracted to charged surfaces, reducing performance.
10. **Keep track of the components**. When removing or replacing any part, be careful not to leave small parts, such as screws, loose inside the computer.

**Power Safety Warning**

Before you undertake any upgrade procedures, make sure that you have turned off the power, and disconnected all peripherals and cables (including telephone lines). It is advisable to also remove your battery in order to prevent accidentally turning the machine on.

## Cleaning

Do not apply cleaner directly to the computer, use a soft clean cloth.
Do not use volatile (petroleum distillates) or abrasive cleaners on any part of the computer.

# Disassembly Steps

The following table lists the disassembly steps, and on which page to find the related information. **PLEASE PERFORM THE DISASSEMBLY STEPS IN THE ORDER INDICATED.**

### To remove the Battery:

1. Remove the battery *page 2 - 5*

### To remove the HDD:

1. Remove the battery *page 2 - 5*
2. Remove the HDD *page 2 - 6*

### To remove the Optical Device:

1. Remove the battery *page 2 - 5*
2. Remove the Optical device *page 2 - 8*

### To remove the System Memory:

1. Remove the battery *page 2 - 5*
2. Remove the system memory *page 2 - 9*

### To remove the Inverter Board:

1. Remove the battery *page 2 - 5*
2. Remove the inverter board *page 2 - 11*

### To remove and install a Processor:

1. Remove the battery *page 2 - 5*
2. Remove the processor *page 2 - 12*
3. Install the processor *page 2 - 14*

### To remove the Wireless LAN Module:

1. Remove the battery *page 2 - 5*
2. Remove the wireless LAN *page 2 - 15*

### To remove the Bluetooth Module:

1. Remove the battery *page 2 - 5*
2. Remove the Bluetooth *page 2 - 16*

### To remove the Keyboard:

1. Remove the battery *page 2 - 5*
2. Remove the keyboard *page 2 - 17*

### To remove the Modem:

1. Remove the battery *page 2 - 5*
2. Remove the HDD *page 2 - 6*
3. Remove the Optical device *page 2 - 8*
4. Remove the processor *page 2 - 12*
5. Remove the keyboard *page 2 - 17*
6. Remove the modem *page 2 - 18*

### To remove the LCD Back Cover: (for W765SUNM only)

1. Remove the battery *page 2 - 5*
2. Remove the back cover *page 2 - 20*

# Removing the Battery

1. Turn the computer **off**, and turn it over.
2. Slide the latch 1 in the direction of the arrow.
3. Slide the latch 2 in the direction of the arrow, and hold it in place.
4. Slide the battery 3 in the direction of the arrow 4.

*Figure 1*
**Battery Removal**

a. Slide the latch and hold in place.
b. Slide the battery in the direction of the arrow.

**a.**

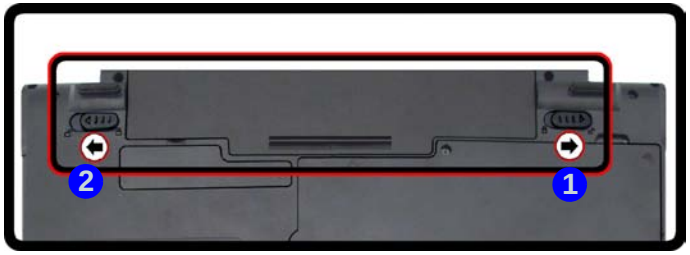


**b.**

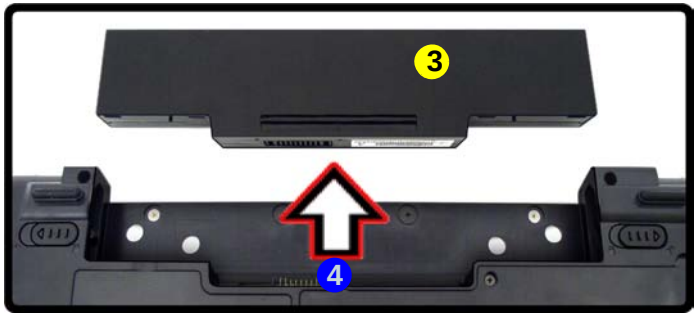


3. Battery

# Removing the Hard Disk Drive

*Figure 2*
**HDD Assembly Removal**

The hard disk drive can be taken out to accommodate other 2.5" serial (SATA) hard disk drives with a height of 9.5mm (h). Follow your operating system's installation instructions, and install all necessary drivers and utilities (as outlined in **Chapter 4 of the User's Manual**) when setting up a new hard disk.

## Hard Disk Upgrade Process

a. Locate the HDD bay cover and remove the screw(s).

1. Turn **off** the computer, and remove the battery (***page 2 - 5***).
2. Locate the hard disk bay cover and remove screw 1 & 2.

**a.**

- 2 Screws

**HDD System Warning**

New HDD's are blank. Before you begin make sure:

You have backed up any data you want to keep from your old HDD.

You have all the CD-ROMs and FDDs required to install your operating system and programs.

If you have access to the internet, download the latest application and hardware driver updates for the operating system you plan to install. Copy these to a removable medium.

3. Remove the hard disk bay cover 3.
4. Grip the tab and slide the hard disk in the direction of arrow 4.
5. Lift the hard disk out of the bay 5.
6. Remove the screw 6 and the adhesive cover 7 from the hard disk 8.
7. Reverse the process to install a new hard disk (do not forget to replace all the screws and covers).

*Figure 3*
**HDD Assembly Removal (cont'd.)**

b. Remove the HDD bay cover.
c. Grip the tab and slide the HDD in the direction of the arrow.
d. Lift the HDD assembly out of the bay.
e. Remove the screws and adhesive cover.

b.

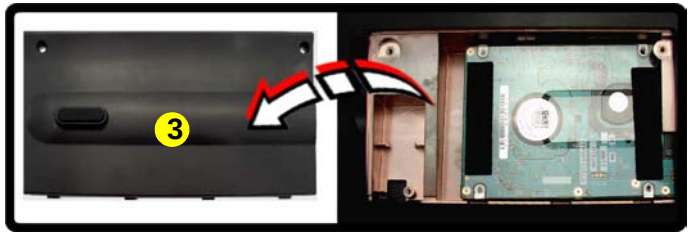


c.

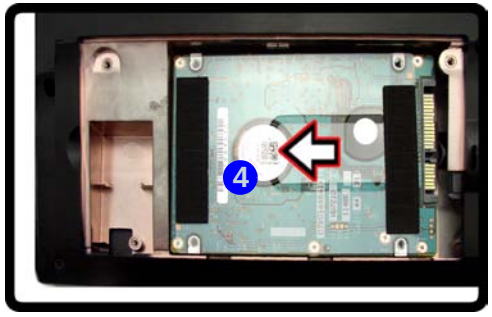


d.

e.

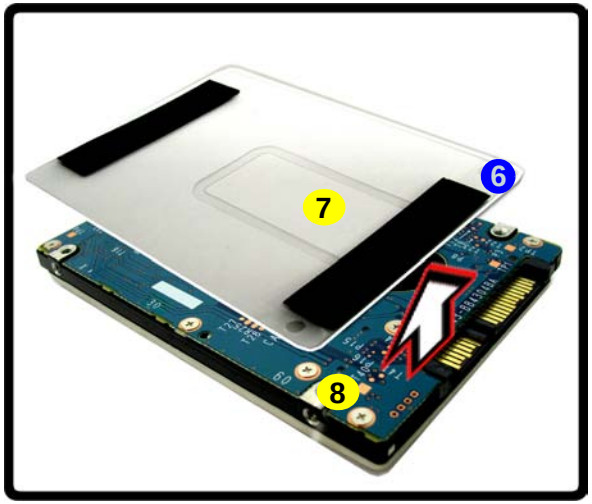


3. HDD Bay Cover
7. Adhesive Cover
8. HDD

- 2 Screws

*Figure 4*
**Optical Device Removal**

a. Remove the screws.
b. Remove the HDD bay cover.
c. Remove the screw.
d. Push the optical device out off the computer at point 6.

# Removing the Optical (CD/DVD) Device

1. Turn **off** the computer, and remove the battery (*page 2 - 5*).
2. Locate the hard disk bay cover and remove screw 1 & 2.
3. Remove the hard disk bay cover 3.
4. Remove the screw at point 4, and use a screwdriver to carefully push out the optical device 6 at point 5.
5. Insert the new device and carefully slide it into the computer (the device only fits one way. DO NOT FORCE IT; The screw holes should line up).
6. Restart the computer to allow it to automatically detect the new device.

a.

b.

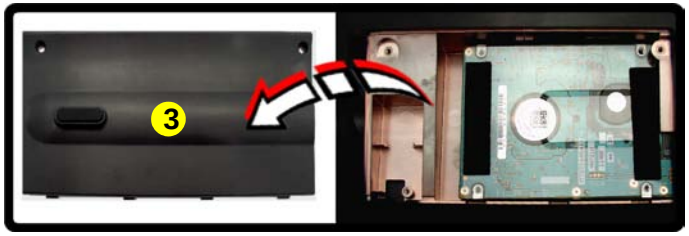


c.

d.

3. HDD Bay Cover
6. Optical Device

- 3 Screws

# Removing the System Memory (RAM)

The computer has two memory sockets for 200 pin Small Outline Dual In-line Memory Modules (SO-DIMM) supporting **DDR2** 667/800MHz. The main memory can be expanded up to 4GB. The SO-DIMM modules supported are 1024MB, and 2048MB and **DDRII** Modules. The total memory size is automatically detected by the POST routine once you turn on your computer.

## Memory Upgrade Process

1. Turn **off** the computer, remove the battery (***page 2 - 5***).
2. Locate the component bay cover 1, and remove screws 2 - 4.
3. Carefully (**a fan and cable are attached to the under side of the cover**) lift up the bay cover.
4. Carefully disconnect the fan cable 5, and remove the cover 1.

a.

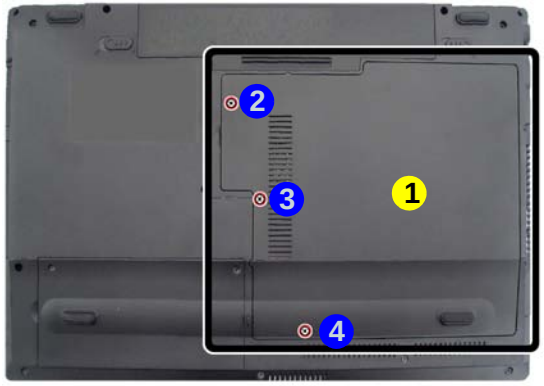


b.

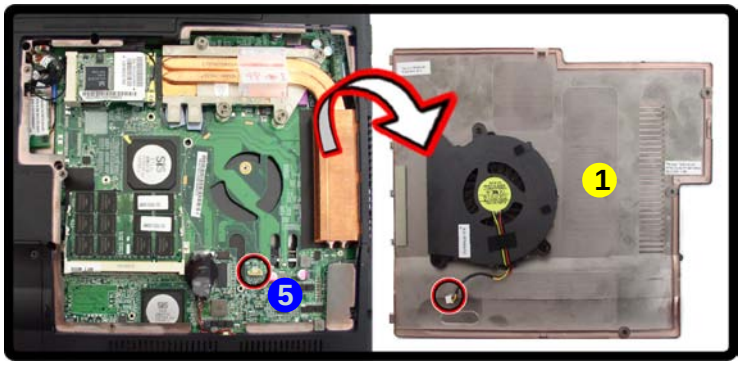


*Figure 5*
**RAM Module Removal**

a. Remove the screws.
b. Remove the cover.

**Contact Warning**

Be careful not to touch the metal pins on the module's connecting edge. Even the cleanest hands have oils which can attract particles, and degrade the module's performance.

1. Component Bay Cover

- 3 Screws

*Figure 6*
**RAM Module Removal (cont'd.)**

c. Pull the release latch(es).
d. Remove the module(s).

5. Gently pull the two release latches (6 & 7) on the sides of the memory socket in the direction indicated by the arrows (***Figure 6c***).

c.
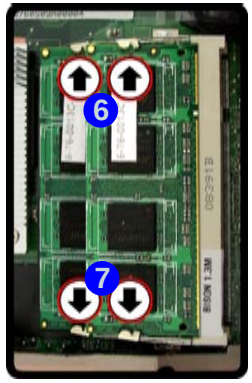


d.

6. The RAM module(s) 8 will pop-up (***Figure 6d***), and you can then remove it.
7. Pull the latches to release the second module if necessary.
8. Insert a new module holding it at about a 30° angle and fit the connectors firmly into the memory slot.
9. The module's pin alignment will allow it to only fit one way. Make sure the module is seated as far into the slot as it will go. DO NOT FORCE the module; it should fit without much pressure.
10. Press the module in and down towards the mainboard until the slot levers click into place to secure the module.
11. Replace the bay cover and screws (**make sure you reconnect the fan cable before screwing down the bay cover**).
    **Note** that there are five 9 - 13 cover pins which need to be aligned with slots in the case, to insure a proper cover fit, before screwing down the bay cover 1.

e.
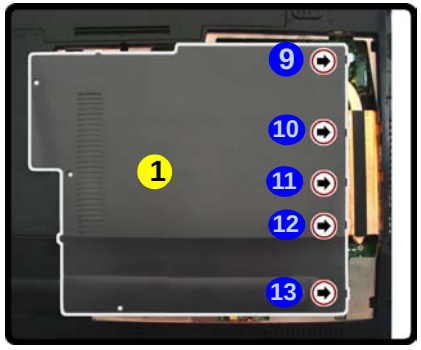


12. Restart the computer to allow the BIOS to register the new memory configuration as it starts up.

8. RAM Module(s)

# Removing the Inverter Board

1. Turn **off** the computer, and remove the battery (*page 2 - 5*).
2. Remove any rubber covers, screws 1 - 6 (*Figure 7a*), then run your finger around the middle of the frame to carefully unsnap the LCD front panel module 7 from the back.
3. Discharge the remaining system power (see *?$paratext>?* below).
4. Remove screw 8 (*Figure 7b*) from the inverter, and carefully lift the inverter board up slightly.
5. Disconnect cables 9 & 10 (*Figure 7c*) from the inverter, then remove the inverter 11 (*Figure 7d*) from the LCD back cover module.

*Figure 7*
**Inverter Board Removal**

a. Remove the 6 screws and unsnap the LCD front panel module from the back.
b. Remove the screw and discharge the remaining power from the inverter board and lift the board up slightly.
c. Disconnect the cables from the inverter.
d. Remove the inverter.

a.

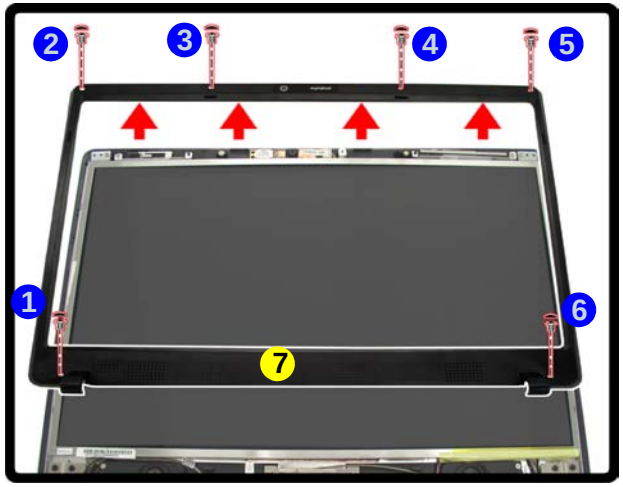


b.

c.

d.

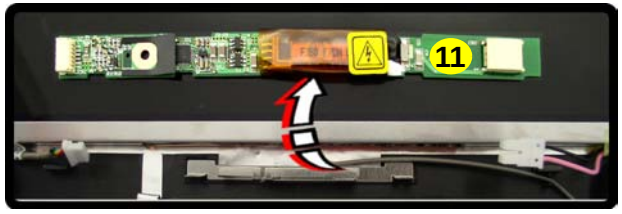


**Inverter Power Warning**

In order to prevent a short circuit when removing the inverter it is necessary to discharge any remaining system power. To do so, press the computer's power button for a few seconds before disconnecting the inverter cable.

7. LCD Front Panel
11. Inverter Board

- 6 Screws

*Figure 8*
**Processor Removal**

a. Remove the cover and locate the heat sink.
b. Loosen the screws in the order indicated.
c. Remove the heat sink.

# Removing and Installing the Processor

## Processor Removal Procedure

1. Turn **off** the computer, remove the battery (*page 2 - 5*) and the component bay cover (*page 2 - 9*).
2. Loosen the CPU heat sink screws in the order 4, 3, 2 & 1 (the reverse order as indicated on the label).
3. Carefully lift up the heat sink 5 (*Figure 8c*) off the computer.

a.

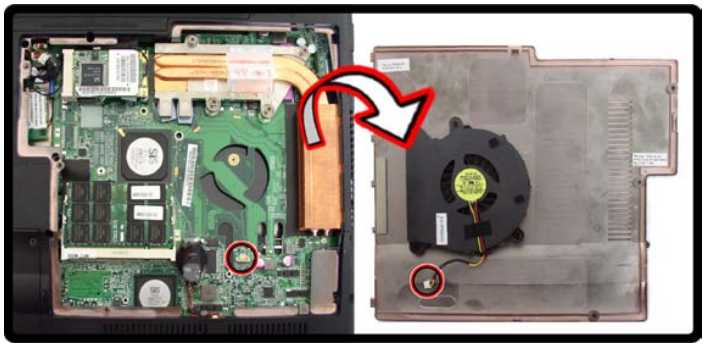

b.

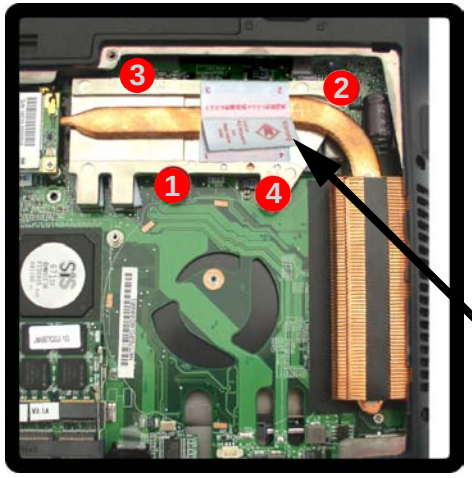


c.

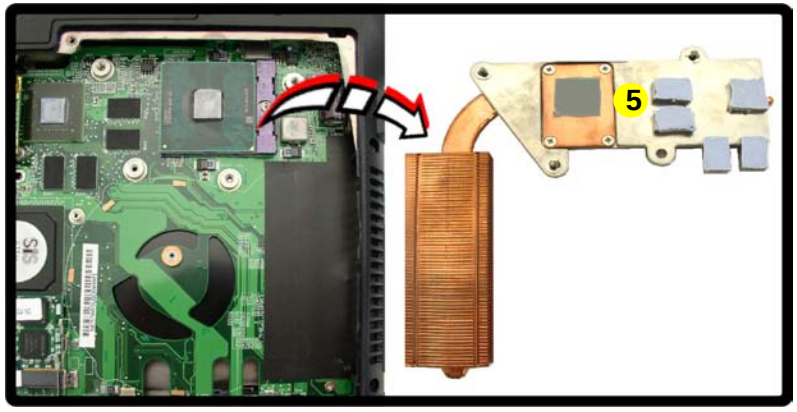


**Note**:

Loosen the screws in the order 4, 3, 2, 1 as indicated on the label.

5. Heat Sink

- 4 Screws

4. Turn the release latch 6 towards the unlock symbol 🔓, to release the CPU (*Figure 9a*).
5. Carefully (it may be hot) lift the CPU 7 up out of the socket (*Figure 9b*).
6. See *page 2 - 14* for information on inserting a new CPU.
7. When re-inserting the CPU, pay careful attention to the pin alignment, it will fit only one way (DO NOT FORCE IT!).

*Figure 9*
**Processor Removal (cont'd)**

d. Turn the release latch to unlock the CPU.
e. Lift the CPU out of the socket.

**d.**

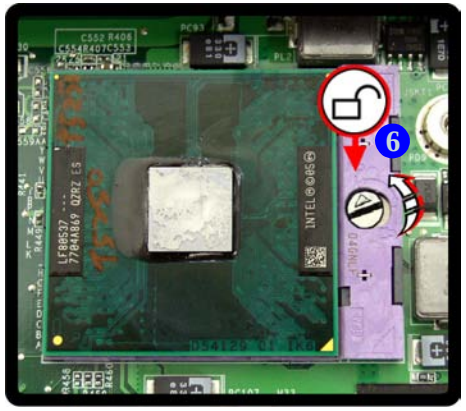


**Unlock**

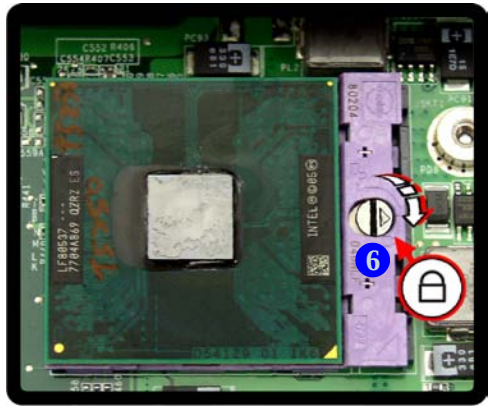


**Lock**

**e.**

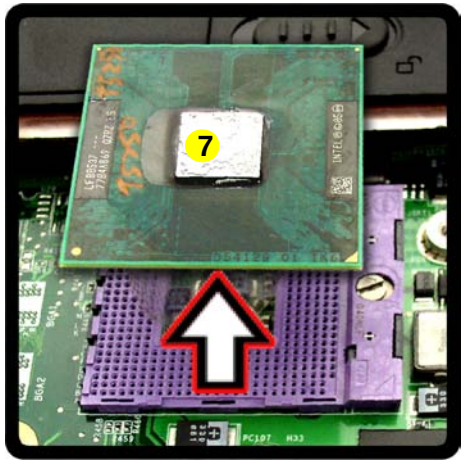


**Caution**

The heat sink, and CPU area in general, contains parts which are subject to high temperatures. Allow the area time to cool before removing these parts.

7. CPU

*Figure 10*
**Processor Installation**

a. Insert the CPU.
b. Turn the release latch towards the lock symbol.
c. Remove the sticker from the heat sink and insert the heat sink.
d. Tighten the screws.

## Processor Installation Procedure

1. Insert the CPU (A), pay careful attention to the pin alignment, it will fit only one way (DO NOT FORCE IT!), and turn the release latch (B) towards the lock symbol 🔒 (***Figure 10b***).
2. **Remove the sticker** (C) (***Figure 10c***) from the heat sink.
3. Insert the heat sink (D) as indicated in ***Figure 10c***.
4. Tighten the CPU heat sink screws in the order (1), (2), (3), & (4) (the order as indicated on the label and ***Figure 10d***).
5. Replace the component bay cover and tighten the screws (***page 2 - 12***).

**a.**

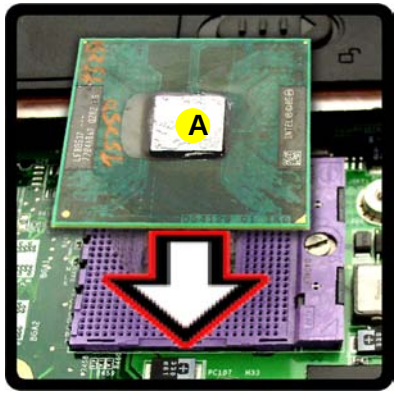


**c.**

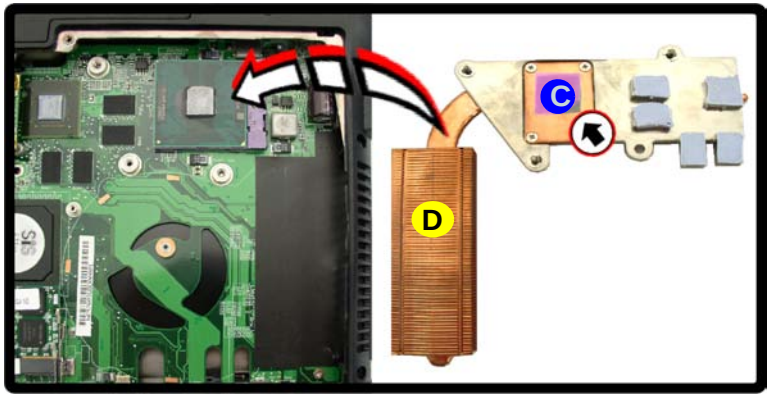


**b.**

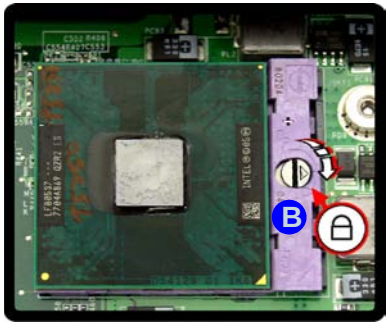


**d.**

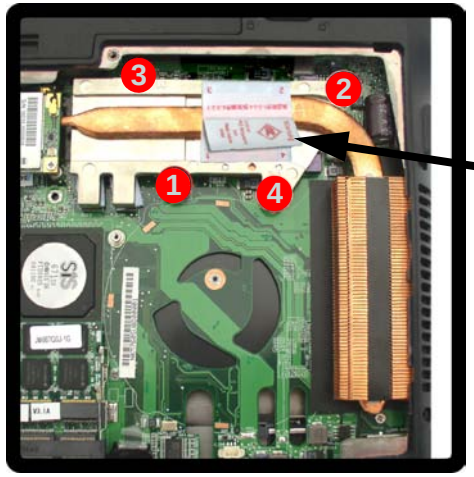


**Note**:

Tighten the screws in the order 1, 2, 3, 4 as indicated on the label.

A. CPU
D. Heat Sink

- 4 Screws

# Removing the Wireless LAN Module

1. Turn **off** the computer, remove the battery (***page 2 - 5***) and the component bay cover (***page 2 - 9***).
2. The Wireless LAN module will be visible at point 1 on the mainboard.
3. Carefully disconnect cables 2 - 3, then remove screw 4 from the module socket.
4. The Wireless LAN module 5 will pop-up.
5. Lift the Wireless LAN module (***Figure 11d***) up and off the computer.

a.

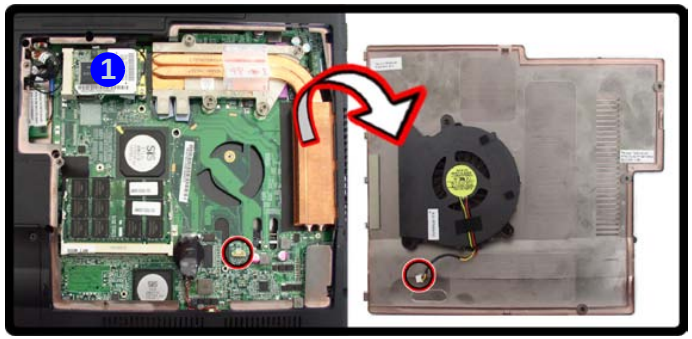


b.

c.

d.

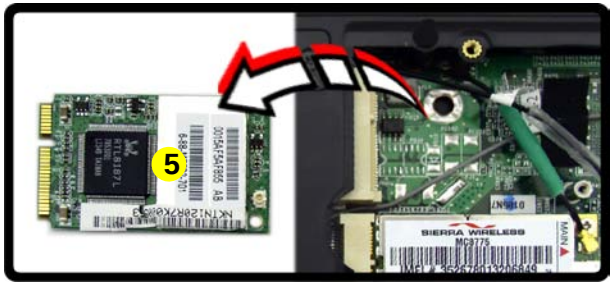


*Figure 11*
**Wireless LAN Module Removal**

a. Remove the cover.
b. Disconnect the cable and remove the screw.
c. The WLAN module will pop up.
d. Lift the WLAN module out.

Note: Make sure you reconnect the antenna cable to ‘’1’’ + ‘’2’’socket (***Figure b***).

5. WLAN Module.

- 1 Screw

*Figure 12*
**Bluetooth Module Removal**

a. Remove the cover and locate the Bluetooth.
b. Remove the screw.
c. Disconnect the cable and the connector.
d. Lift the Bluetooth module up off the socket.

# Removing the Bluetooth Module

1. Turn **off** the computer, remove the battery (*page 2 - 5*) and the component bay cover (*page 2 - 9*).
2. The Bluetooth will be visible at point 1 on the mainboard.
3. Remove the screw 2 and turn the module over.
4. Carefully separate the Bluetooth module from the connector 3 and disconnect the cable 4.
5. Lift the Bluetooth module 5 (*Figure 12d*) up and off the computer.

a.

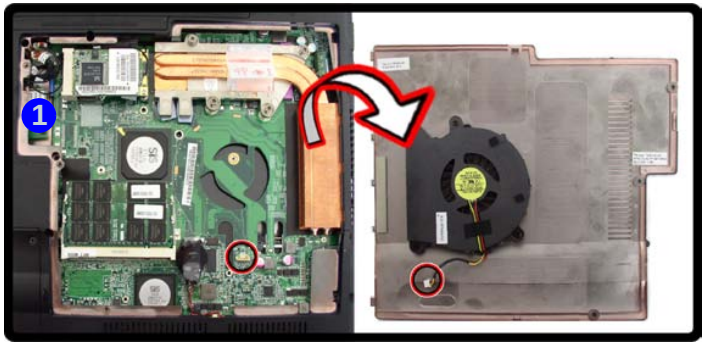


b.

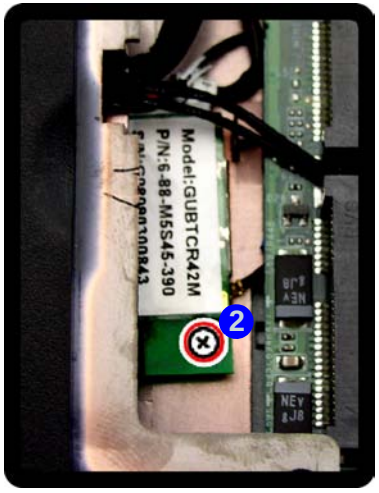


c.

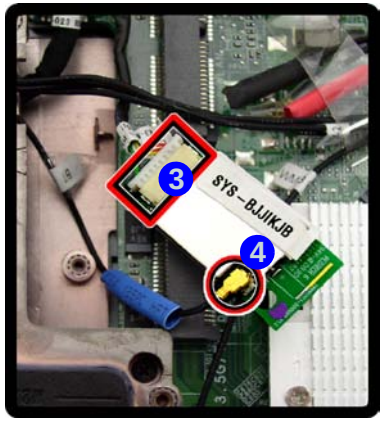


d.

5. Bluetooth Module

- 1 Screw

# Removing the Keyboard

1. Turn **off** the computer.
2. Remove the battery
3. Remove the screws 2 - 3 and use a screwdriver to carefully push out the top cover module 5 at point 4.
4. Remove the top cover module 5 and the screws 6 - 10 (***Figure 13d***),
5. Carefully lift the keyboard 11 up, being careful not to bend the keyboard ribbon cable (***Figure 13e***).
6. Disconnect the keyboard ribbon cable 12 from the locking collar socket 13.
7. Carefully lift up the keyboard (***Figure 13f***) off the computer.

a.

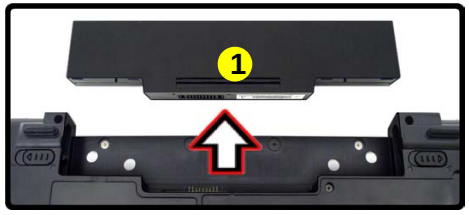


b.

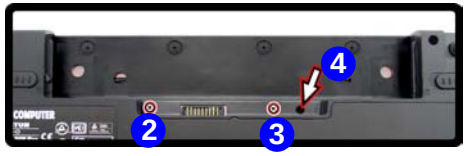


c.

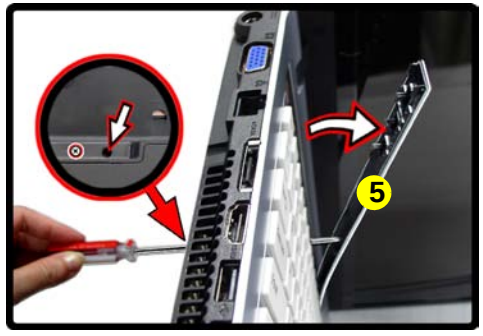


d.

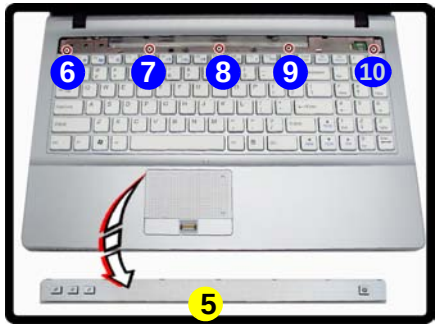


f.

e.

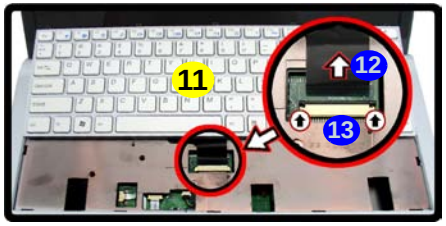


*Figure 13*
**Keyboard Removal**

a. Remove the battery.
b. Remove the screws and use a screwdriver to carefully push out the top cover module at point 4.
c. Remove the Top cover module.
d. Remove the screws.
e. Lift the keyboard up and disconnect the cable from the locking collar.
f. Remove the keyboard.

1. Battery
5. Top cover module
11. Keyboard

*Figure 14*
**Modem Removal**

a. Remove the screws.
b. Turn the computer over, remove the screws and disconnect the cable.

# Removing the Modem

1. Turn **off** the computer, remove the battery (***page 2 - 5***), HDD (***page 2 - 6***), optical device (***page 2 - 8***), component bay cover (***page 2 - 9***), CPU (***page 2 - 12***), bluetooth (***page 2 - 16***) and keyboard (***page 2 - 17***).
2. Remove screws 1 - 21 from the bottom case.
3. Turn the computer over, remove screws 22 - 23 and disconnect cables 24 - 27 (***Figure 15b***).

a.

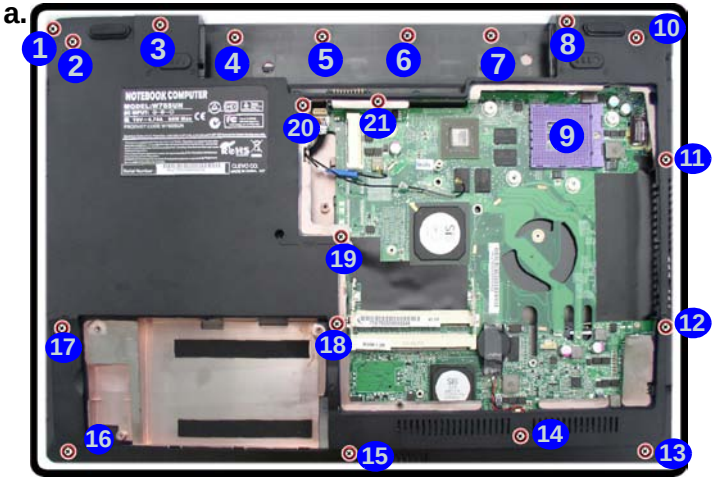


b.

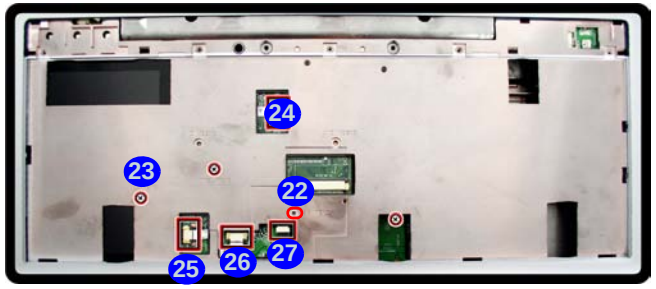


- 23 Screws

4. Carefully lift the top case 28 up and off the computer (*Figure 15c*).
5. Remove screws 29 - 31 (*Figure 15d*) from the computer.
6. Remove screws 32 - 33 (*Figure 15e*) and disconnect the cable 34 from the modem module.
7. Lift the modem up and separate the modem from the connector 35.
8. Lift the modem 36 off the computer.

c.

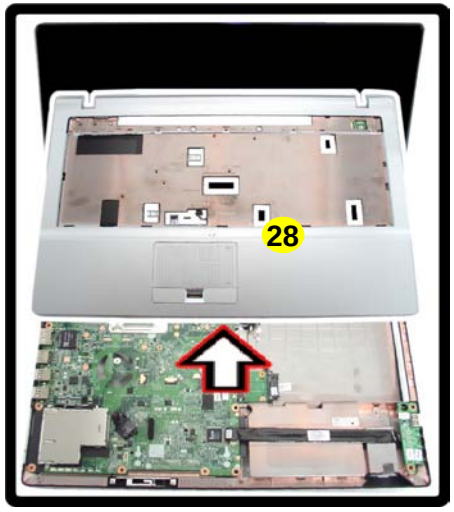


d.

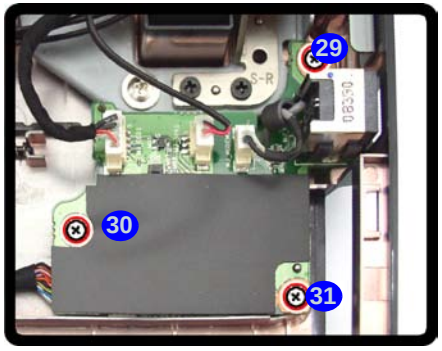


e.

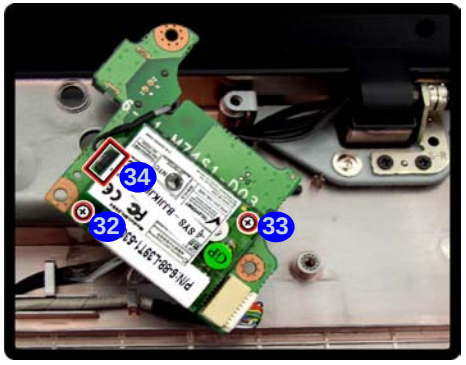


f.

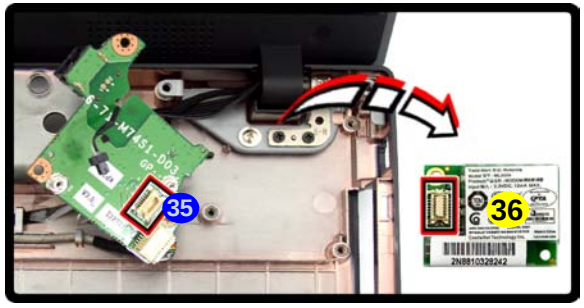


*Figure 15*
**Modem Removal (cont'd.)**

c. Lift the cover off the computer.
d. Remove the screws.
e. Remove the screws and disconnect the connector.
f. Lift the modem out.

28. Top Case
36. Modem

- 5 Screws

# Removing the LCD Back Cover

## (for W765SUNM only)

*Figure 16*
**LCD Back Cover Removal**

a. Remove the rubber covers and screws.
b. Slide the cover forward.
c. Remove the LCD back cover.

1. Turn **off** the computer, and turn it over to remove the battery (***page 2 - 5***).
2. Open the LCD and carefully remove the rubber screw covers 1 & 2 (2 corner rubber screw covers only) and set them aside.
3. Remove screw 3 & 4 from the front cover.
4. Carefully slide the cover forward in the direction of the arrows 5 & 6 as illustrated below.
5. Remove the LCD back cover 7 .

a.

b.

c.

**Rubber Screw Covers**

After removing the rubber screw covers, place them on a clean dry surface (or attach them to the front cover itself) in order to prevent loss of adhesive.

7. LCD Back Cover

- 2 Screws

6. Align the replacement cover with the dotted line 8 as illustrated below (and as marked on the cover).

d.

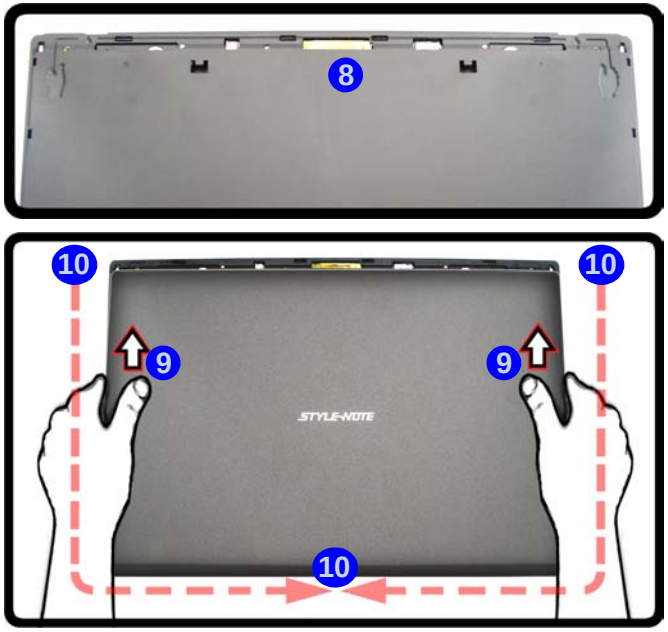


*Figure 17*
**LCD Back Cover Removal (cont'd)**

d. Align the replacement cover and slide forward to click firmly into place.

7. Slide the back cover forward until it clicks firmly into place 9.
8. Run your hands around the sides and front of the cover 10 to make sure it is firmly aligned in place (carefully press down to make sure the fit is secure).
9. Replace the screws and rubber covers.

# Appendix A: Part Lists

This appendix breaks down the ***W760SUN/W765SUN/W765SUNM*** series notebook's construction into a series of illustrations. The component part numbers are indicated in the tables opposite the drawings.

**Note:** This section indicates the *manufacturer's* part numbers. Your organization may use a different system, so be sure to cross-check any relevant documentation.

**Note:** Some assemblies may have parts in common (especially screws). However, the part lists DO NOT indicate the total number of duplicated parts used.

**Note:** Be sure to check any update notices. The parts shown in these illustrations are appropriate for the system at the time of publication. Over the product life, some parts may be improved or re-configured, resulting in *new* part numbers.

# Part List Illustration Location

The following table indicates where to find the appropriate part list illustration.

*Table A- 1*
**Part List Illustration Location**

| Parts | W760SUN | W765SUN / W765SUNM |
|---|---|---|
| Top with Fingerprint | *page A - 3* | *page A - 4* |
| Top without Fingerprint | *page A - 5* | *page A - 6* |
| Bottom | *page A - 7* | |
| LCD | *page A - 8* | |
| HDD | *page A - 9* | |
| DVD-Super-Multi | *page A - 10* | |

# Top with Fingerprint (W760SUN)

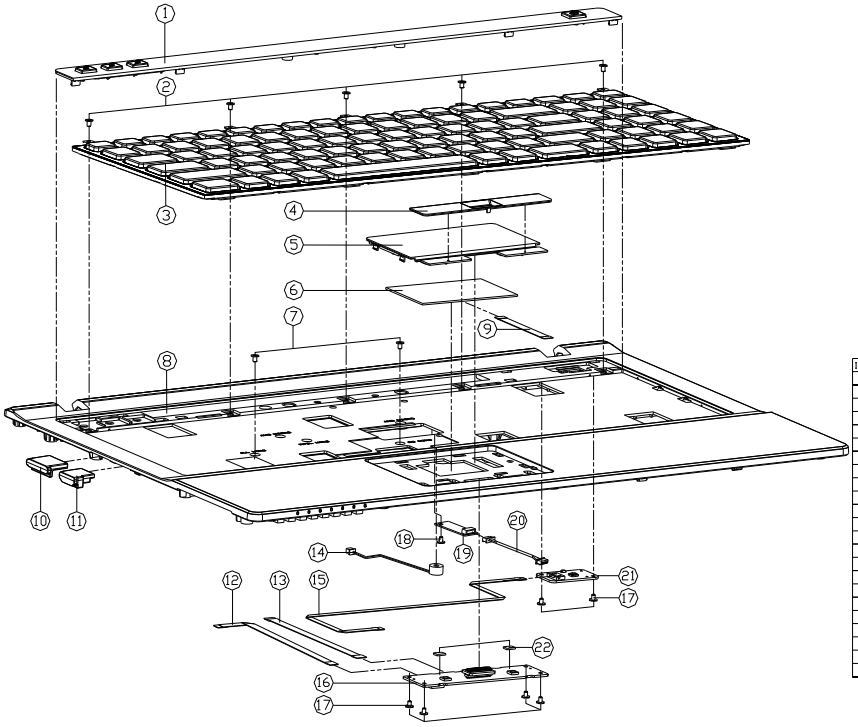

| ITEM | PART NAME | PART NO | REMARK |
|---|---|---|---|
| 1 | TOP COVER MODULE W760S | 6-42-W76S2-B01 | |
| 2 | SCREW M2*2.5L KI BK/Z ICT NYW35 1*13 | 6-35-B6120-2RB | |
| 3 | W/O FRAME GA PC-ABS CBABC CBA/W JEIDI W760S | 6-42-W76S2-0G0-1 | |
| 4 | CLICK BUTTON COVER FP MODULE W760S | 6-42-W76S2-700 | |
| 5 | CLICK BUTTON PLATE PC-ABS CBABC CBA/W JEIDI W760S | 6-42-W76S2-011 | |
| 6 | TOUCH PAD SYNAPTICS TM-00398-001 M740S | 6-49-M74S2-010 | |
| 7 | SCREW M2*3L KI BZ ICT NY (00+045,3T+0.4) | 6-35-B6120-3RD | |
| 8 | TOP CASE MODULE W760S | 6-39-W76S2-012 | |
| 8 | TOP CASE MODULE W760S-C | 6-39-W76S2-012-C | |
| 9 | FFC CABLE FOR CLICK BOARD TO TOUCH PAD SMT EPAL FOR W760S | 6-43-M76S0-041 | |
| 10 | ESATA RUBBER M740S | 6-47-M74S2-030 | |
| 11 | HDMI RUBBER M740S | 6-47-M74S2-020 | |
| 12 | FFC CABLE FOR W/O TO FINGERPRINT 50PIN 0P0.5 FOR W760S | 6-43-W76SF-010 | |
| 13 | FFC CABLE 0P0.5 W/O TO CLICK BOARD FOR W760S | 6-43-W76S0-020 | |
| 14 | MIC WIRES 2*1*8V 22K W/CABLE CBABS-FEL-0 W760S | 6-23-EM62E-010 | |
| 15 | FFC CABLE FOR W/O TO SWITCH BOARD 1PIN 0P0.5 2LAND 0P0.5 FOR W760S | 6-43-W76S0-010 | |
| 16 | CLICK BOARD V30 SMT W/ELECTRONIC MEMORY V30 ASSY | 6-77-M76SA-N03D | |
| 17 | ■ SCREW M2*3L KI W BZ ICT GYI-PA10X | 6-35-B1120-3RE | |
| 18 | ■ SCREW M2*3L KI W BZ ICT GYI-PA10X | 6-35-B1120-3RD | |
| 19 | [illegible] | 6-88-M73T5-3900 | (OPTION) |
| 20 | [illegible] | 6-43-W76SB-011 | (OPTION) |
| 21 | POWER SWITCH BOARD V30 M740S | 6-77-M74SS-003 | |
| 22 | GASKET (5*3*1) FOR TOP CASE M740S | 6-47-00190-05K | |

*Figure A - 1*
**Top with Fingerprint**

# Top with Fingerprint (W765SUN)



*Figure A - 2*
**Top with Fingerprint**

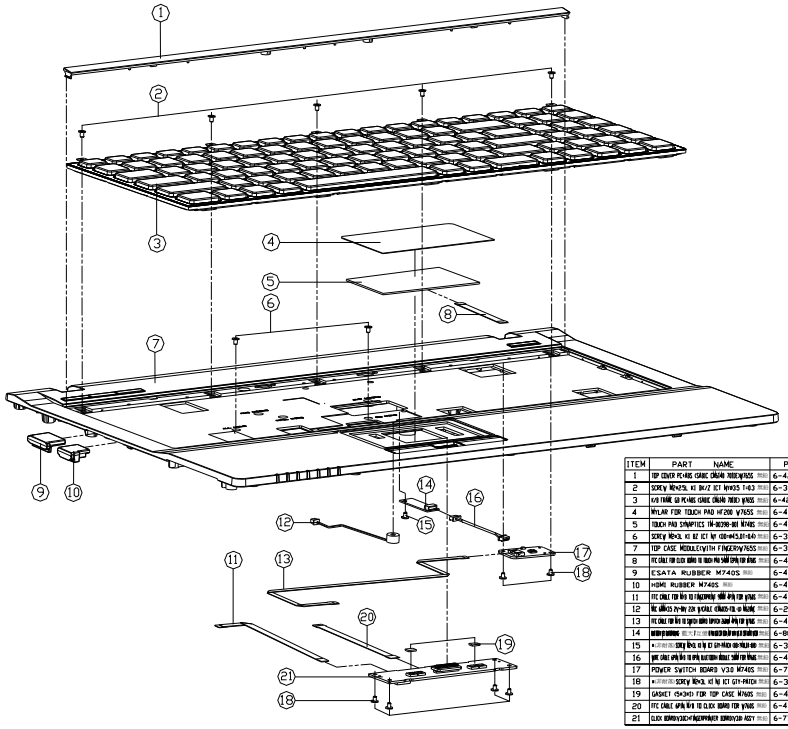

| ITEM | PART NAME | PART NO | REMARK |
|---|---|---|---|
| 1 | TOP COVER W/ANT CAMERA (WITH MIC) W765S | 6-42-W765D-080 | |
| 2 | SCREW M2x3.5L KI BK/Z ICT NW03 T-03 | 6-35-B6120-2R0 | |
| 3 | K/B FRAME (W/ K/B) W/ANT CAMERA (WITH MIC) W765S | 6-42-W765D-0G0-1 | |
| 4 | MYLAR FOR TOUCH PAD HF200 W765S | 6-40-W765D-021 | |
| 5 | TOUCH PAD SYNAPTICS TM-B0298-001 W765S | 6-49-M74S2-010 | |
| 6 | SCREW M2x3L KI BZ ICT W/ GB(+M3.2)T-0.40 | 6-35-B6120-3R0 | |
| 7 | TOP CASE MODULE(WITH FINGERPRINT) W765S | 6-39-W765D-011 | |
| 8 | FFC CABLE FOR LCD BOARD TO MAIN BOARD FOR W765S | 6-43-W765D-041 | |
| 9 | ESATA RUBBER M74S | 6-47-M74S2-030 | |
| 10 | HDMI RUBBER M74S | 6-47-M74S2-020 | |
| 11 | FFC CABLE FOR KB TO TOUCHPAD FOR W765S | 6-43-W765F-010 | |
| 12 | MIC CABLE (5P-5P) 220 W/CABLE CLAMP FOR W765S | 6-23-CM62E-010 | |
| 13 | FFC CABLE FOR KB TO MAIN BOARD FOR W765S | 6-43-W765D-010 | |
| 14 | [illegible] | 6-88-M73T5-3900 | (OPTION) |
| 15 | ★[illegible] SCREW M2x3L KI W/ ID (+M2x3)-(0.5)-M2x3-(0.5) | 6-35-B1120-3R0 | |
| 16 | [illegible] | 6-43-W765B-011 | (OPTION) |
| 17 | POWER SWITCH BOARD V3.0 M74S | 6-77-M74S5-003 | |
| 18 | ★[illegible] SCREW M2x3L KI W/ ICT GY-PATCH | 6-35-B1120-3RE | |
| 19 | GASKET (5*3*3*) FOR TOP CASE W765S | 6-47-00190-05K | |
| 20 | FFC CABLE (4P)L W/O TO CLOCK BOARD FOR W765S | 6-43-W765D-020 | |
| 21 | CLOCK BOARD V3.0(+FAN)(WITHOUT BOARD V3.0) ASSY | 6-77-M765A-N03D | |

# Top without Fingerprint (W760SUN)

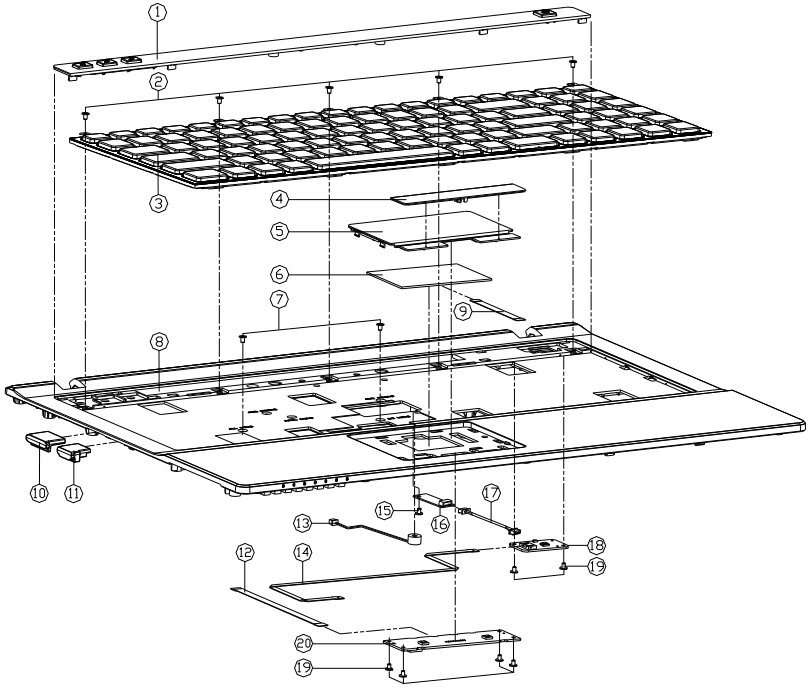

| ITEM | PART NAME | PART NO | REMARK |
|---|---|---|---|
| 1 | TOP COVER MODULE W760S | 6-42-W76S2-801 | |
| 2 | SCREW M2*2.5, KI BK/Z ICT NI*N35 T-K3 | 6-35-B6120-2RB | |
| 3 | A/B FRAME GB PC*ABS GABC ORANGE RUBBER W/VAS | 6-42-W76S2-0G0-1 | |
| 4 | CLICK BUTTON COVER W/O FP MODULE W/VAS | 6-42-W76S2-200 | |
| 5 | CLICK BUTTON PLATE PC*ABS GABC ORANGE RUBBER W/VAS | 6-42-W76S2-011 | |
| 6 | TOUCH PAD SYNAPTICS TM-C0298-001 M740S | 6-49-M74S2-010 | |
| 7 | SCREW M2*4, KI BZ ICT NI CB-M4S.8-K4 | 6-35-B6120-3RD | |
| 8 | TOP CASE MODULE W760S | 6-39-W76S2-012 | FOR W760S |
| 8 | TOP CASE MODULE W760S-C | 6-39-W76S2-012-C | FOR W760S-C |
| 9 | FFC CABLE FOR CLICK BOARD TO TOUCH PAD SMT W/VAS FOR W760S | 6-43-M76S0-041 | |
| 10 | ESATA RUBBER M740S | 6-47-M74S2-030 | |
| 11 | HDMI RUBBER M740S | 6-47-M74S2-020 | |
| 12 | FFC CABLE 40PIN 0.5P 10 CLICK BOARD FOR W760S | 6-43-W76S0-020 | |
| 13 | FFC 40PIN 25-0P 2.0K W/OBLE 0.5MM(0.5-0.8) 40-0P(0.5) | 6-23-E462E-010 | |
| 14 | FFC CABLE FOR NB TO SPDIF BOARD SPDIF BOARD W/O FOR W760S | 6-43-W76S0-010 | |
| 15 | *OPTION: SCREW M2*4, KI NI ICT CH-PAD CB-M2.5-K8 | 6-35-B1120-3RD | |
| 16 | [illegible] | 6-88-M7315-3900 | (OPTION) |
| 17 | [illegible] | 6-43-M76S8-011 | (OPTION) |
| 18 | POWER SWITCH BOARD V3.0 M740S | 6-77-M74SS-003 | |
| 19 | *OPTION: SCREW M2*4, KI NI ICT CH-PAD CB-M2.5-K8 | 6-35-B1120-3RE | |
| 20 | CLICK BOARD V3.0B (W/O FP) W760S | 6-77-M76S2-0030-1 | |

*Figure A - 3*
**Top without Fingerprint**

# Top without Fingerprint (W765SUN)



*Figure A - 4*
**Top without Fingerprint**

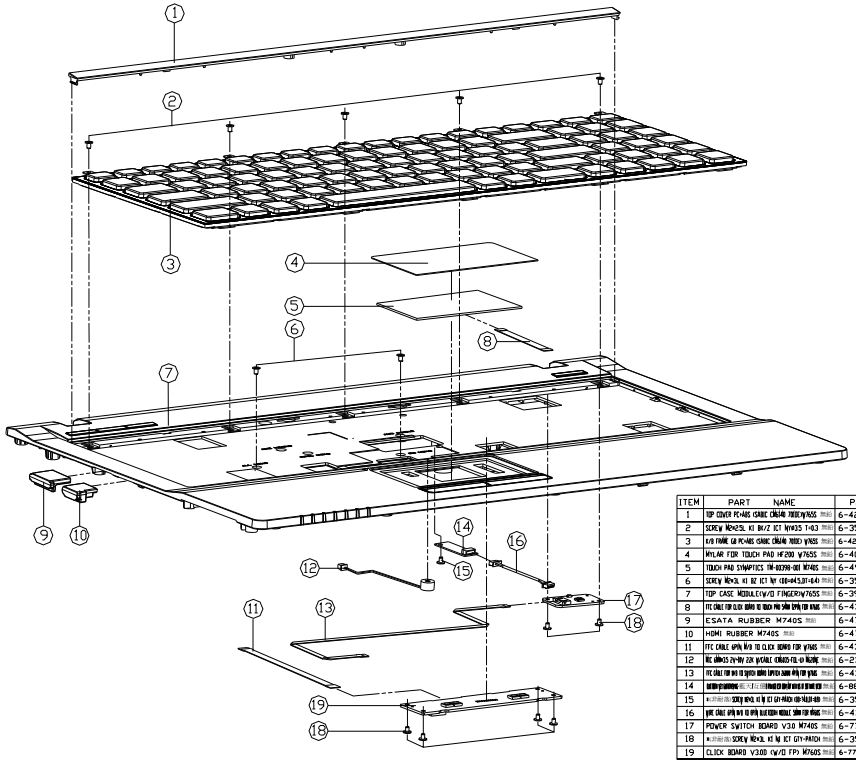

| ITEM | PART NAME | PART NO | REMARK |
|---|---|---|---|
| 1 | TOP COVER PC-ABS (SANDC CRAZE TEXTURE) W765S | 6-42-W7652-080 | |
| 2 | SCREW M2*2.5L KI BK/Z ICI NI+0.3 T=0.3 | 6-35-B6120-2RB | |
| 3 | K/B FRAME GR PC-ABS (SANDC CRAZE TEXTURE) W765S | 6-42-W7652-060-1 | |
| 4 | MYLAR FOR TOUCH PAD HF200 W765S | 6-40-W7652-021 | |
| 5 | TOUCH PAD SYNAPTICS TM-80298-001 M740S | 6-49-M74S2-010 | |
| 6 | SCREW M2*3L KI BZ ICI NI (D0=4*4.5,D1=6.4) | 6-35-B6120-3RD | |
| 7 | TOP CASE MODULE(W/O FINGER)W765S | 6-39-W7652-021 | |
| 8 | FFC CABLE FOR CLICK BOARD TO TOUCH PAD SYNA EPAD FOR W765 | 6-43-M76S0-041 | |
| 9 | ESATA RUBBER M740S | 6-47-M74S2-030 | |
| 10 | HDMI RUBBER M740S | 6-47-M74S2-020 | |
| 11 | FFC CABLE 4PIN W/O TO CLICK BOARD FOR W765 | 6-43-W76S0-020 | |
| 12 | MIC UNIOS 2V-8V 2.2K W/CABLE (ORIGIN-FOL-U) W765W | 6-23-EM62E-010 | |
| 13 | FFC CABLE FOR W/O TO SWITCH BOARD 10PIN(0.5mm 4PIN)FOR W765 | 6-43-W76S0-010 | |
| 14 | [illegible] | 6-88-M73T5-3900 | (OPTION) |
| 15 | SCREW M2*3 KI BZ ICI GH-PAD OD=5.8 | 6-35-B1120-3RD | |
| 16 | WIR CABLE 4PIN W/O TO 4PIN BLUETOOTH MODULE 50MM FOR W765 | 6-43-M76S8-011 | (OPTION) |
| 17 | POWER SWITCH BOARD V3.0 M740S | 6-77-M74S5-003 | |
| 18 | SCREW M2*3L KI NI ICI GH-PAD3 | 6-35-B1120-3RE | |
| 19 | CLICK BOARD V3.0 (W/O FPI) W760S | 6-77-M76S2-003B-1 | |

# Bottom

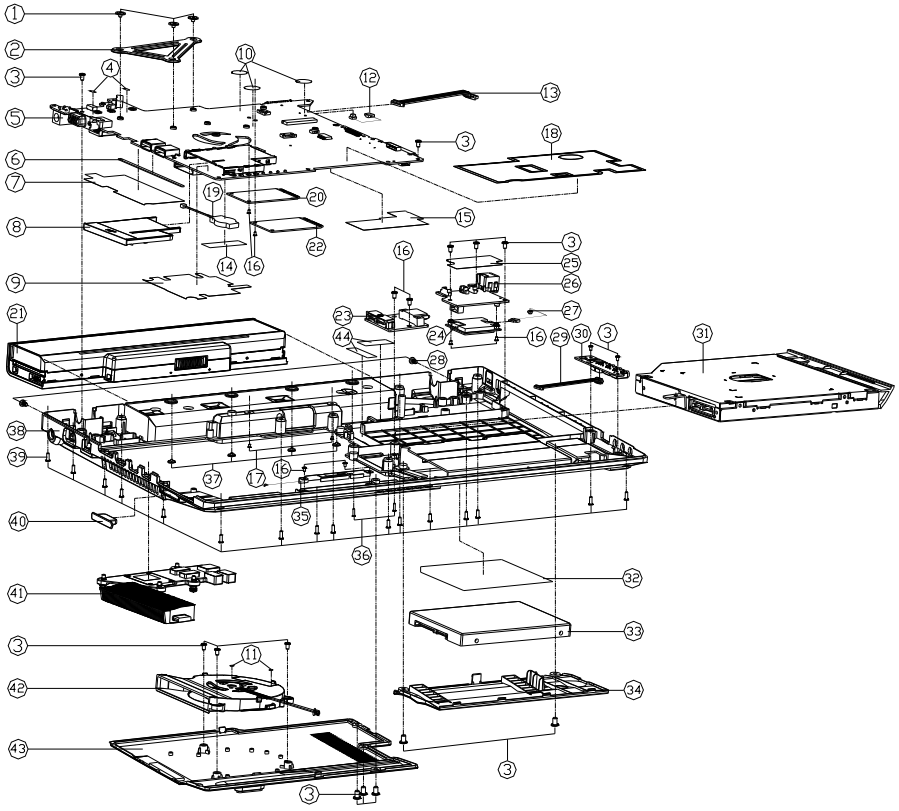

| ITEM | PART NAME | PART NO | REMARK |
|---|---|---|---|
| 1 | [illegible] | 6-35-41025-2R5 | |
| 2 | CPU SUPPORTER MODULE AL M740S | 6-33-M74SS-100 | |
| 3 | SCREW M2.5*5L KI BK/Z ICT NY- | 6-35-B6125-5RA | |
| 4 | MYLAR 5*25*0.25T (FR83+3M467) M760S | 6-40-M76SS-030 | |
| 5 | MAIN BOARD V50A(W/3G) W760SUN | 6-77-W7600-D05A | BLUETOOTH |
| 5 | MAIN BOARD V50A(W/O 3G) W760SUN | 6-77-W7600-D05A-1 | BLUETOOTH |
| 5 | MAIN BOARD V10(W/3G) W760SUA | 6-77-W76A0-D01 | BLUETOOTH |
| 5 | MAIN BOARD V10(W/O 3G) W760SUA | 6-77-W76A0-D01-1 | BLUETOOTH |
| 6 | RUBBER FOR [illegible] | 6-47-M74SS-020 | |
| 7 | HEAT SINK MYLAR FR83 M740S | 6-40-M74SN-012 | |
| 8 | DUMMY NEW CARD PC+ABS TN120R | 6-42-T12R3-011 | |
| 9 | NEW CARD MYLAR FR83 M740I | 6-40-M74T3-010 | |
| 10 | MYLAR D10 FR83 M760S | 6-40-M76S0-010 | |
| 11 | RUBBER D3.4*H2.5D SILICON 70 | 6-47-M67U1-040 | |
| 12 | WIRE CABLE (PIN) W/O 10 W/O 3G MODULE FOR W740S | 6-43-M74SG-010 | FOR 3G (OPTION) |
| 13 | WIRE CABLE FOR W/O 10 MULTI BOARD [illegible] | 6-43-M7700-020 | |
| 14 | TAPE MYLAR (A),MYLAR M550J | 6-40-M55J2-010 | |
| 15 | ODD LOCK MYLAR FR83 M740S | 6-40-M74SZ-010 | |
| 16 | [illegible] | 6-35-B1120-3RD | |
| 17 | SCREW M2*2L KI BZ ICT NY (B0+M4S,B1+B4) | 6-35-B6120-3RD | |
| 18 | AL TOP MYLAR (AL-B1T+PET-B1T)(B,ACCO M760J) | 6-40-M76JS-010 | |
| 19 | [illegible] | 6-23-22015-P2C | |
| 20 | [illegible] | 6-88-M5SS2-7000 | (OPTION) |
| 21 | BATP S LI 11.1V/4.4Ah 3S2P SMP/LIGHT [illegible] | 6-87-M74JS-4W4 | (OPTION) |
| 21 | BATP S LI 11.1V/4.4Ah 3S2P SMP/BAK-2080 9 | 6-87-M660S-4P4 | (OPTION) |
| 21 | BATP S LI 11.1V/4.4Ah 3S2P [illegible] | 6-87-M74JS-4U4 | (OPTION) |
| 21 | BATP S LI 10.8V/4.4Ah 3S2P SMP/PANASONIC | 6-87-M74JS-4C4 | (OPTION) |
| 21 | BATP S LI 11.1V/4.4Ah 3S2P SDC/SANYO [illegible] | 6-87-M74SS-4M4 | (OPTION) |
| 21 | BATP S LI 10.8V/4.4Ah 3S2P SMP/PANASONIC [illegible] | 6-87-M74JS-4C4 | (OPTION) |
| 22 | WCDMA HSPA MDC DESIGN MINI-CARD USB 3.5G | 6-88-M810V-7900 | (OPTION) |
| 22 | WCDMA HSPA MDC/TS SIERRA/WELTIS MINI-CARD USB 3.5G | 6-88-M725W-720 | (OPTION) |
| 23 | ODD BRIDGE BOARD V1.0 W760S | 6-77-W760N-D01 | |
| 24 | [illegible] | 6-88-L3971-5301 | (OPTION) |
| 24 | [illegible] | 6-88-M76S1-B111 | (OPTION) |
| 25 | MDC MYLAR FR83 M740S | 6-40-M74SU-010 | |
| 26 | MULTI I/O BOARD V3.0 M740S | 6-77-M74S1-D03 | |
| 27 | WIRE CABLE (PIN) MULTI BOARD TO MDC MODULE | 6-43-M74SU-011-1 | |
| 28 | SCREW M2*4L KI BZ ICT NY- | 6-35-B6120-4RA | |
| 29 | WIRE CABLE (PIN) W/O 10 AUDIO BOARD FOR W740S | 6-43-M76S0-052 | |
| 30 | PHONE JACK & USB BOARD V3.0A M740S | 6-77-M74SA-D03A | |
| 31 | SATA DVD SUPER MULTI ASSY (OPTION) W740S | 6-79-M760T000-000 | |
| 32 | PRODUCT LABEL W760SUN | 6-45-W7603-011 | |
| 32 | PRODUCT LABEL W765SUN | 6-45-W7653-011-N | |
| 32 | PRODUCT LABEL W760SUA | 6-45-W76A3-011 | |
| 33 | W/O HDD ASS'Y W760S | 6-79-W760S00J-010 | |
| 34 | HDD COVER MODULE W760S | 6-42-W76SJ-101 | |
| 35 | [illegible] | 6-23-7W760-021 | (OPTION) |
| 36 | SCREW M2*8L KI BK/Z ICT NY | 6-35-B6120-8R0 | |
| 37 | SCREW M2*2L KI BK/Z ICT N(+0B,1+B6) | 6-35-B6120-2RE | |
| 38 | BOTTOM CASE MODULE W760S | 6-39-W76S3-012 | |
| 39 | SCREW M2.5*8L KI BK/Z NY ICT | 6-35-B6125-8R0 | |
| 40 | RUBBER CARD READER COLLIER+GLUE | 6-47-M76S8-010 | |
| 41 | [illegible] | 6-31-M74SN-400 | FOR W760SUN |
| 41 | [illegible] | 6-31-W76AN-100 | FOR W760SUA |
| 42 | FAN MODULE M740S | 6-31-M74SS-101 | |
| 43 | CPU COVER MODULE W760S | 6-42-W76SS-102 | |
| 44 | TAPE MYLAR (C),MYLAR M550J | 6-40-M55J2-030 | |

*Figure A - 5*
**Bottom**

# LCD

*Figure A - 6*
**LCD**

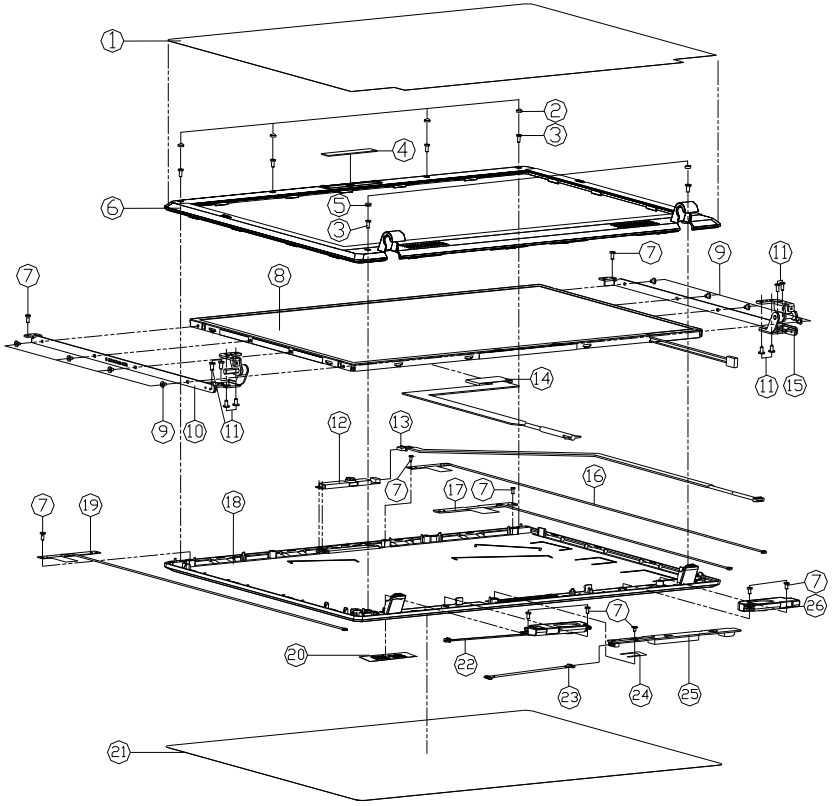

| ITEM | PART NAME | PART NO | REMARK |
|---|---|---|---|
| 1 | LCD PROTECT MYLAR(PET+SHEET) W760S | 6-40-W76S1-041 | |
| 2 | LCD FRONT COVER RUBBER 3-5MM 1.5MM | 6-47-W76S1-050 | |
| 3 | SCREW WASH. KIT+18 D=40 BK/Z ICT NY | 6-35-B6120-5R0 | |
| 4 | CCD LNES (PANA) (W/CCD) W760S | 6-42-W76ST-011 | W/ CCD |
| 4 | CCD LNES (PANA) (W/O CCD) W760S | 6-42-W76ST-020 | W/O CCD |
| 5 | LCD FRONT COVER RUBBER 3X10X0.8+5MM 1.5MM | 6-47-W76S1-030 | |
| 6 | LCD FORNT COVER MODULE W760S | 6-39-W76S1-012 | |
| 7 | SCREW(M3X8) ZD | 6-35-C1120-4RB | |
| 8 | LCD 15.6" HB AU B156XW01 V0 GLARE TYPE 6.5MM | 6-50-L8164-G01 | FOR W76XS/TUN/SUN |
| 8 | LCD 15.6 HB CHIMEI N156B3-L02 GLARE TYPE 6.5MM | 6-50-L8162-D00 | FOR W76XS/SUN/TUN/SUN |
| 8 | LCD 15.6 HB AU B156XW01 V0 GLARE TYPE 6 | 6-50-L8164-G00 | FOR W76XS/SUN |
| 8 | LCD 15.6" HB LG LP156WH1-TLA1 (GLARE TYPE) | 6-50-L8165-L00 | FOR W76XTUN/SUN |
| 9 | SCREW WASH. KI W/ ICT GIY-PATCH | 6-35-B1120-3RE | |
| 10 | LCD HINGE-L SECC W760S | 6-33-W76S1-031-1 | |
| 11 | SCREW M2.5*5L KI BK/Z ICT NY- | 6-35-B6125-5RA | |
| 12 | UVC CAMERA BRACK FIX | 6-88-M740C-4922 | |
| 12 | UVC CAMERA BRACK FIX | 6-88-M740C-4913 | |
| 13 | WIRE CABLE 30PIN W/O TO CCD 300MM MODULE FOR W760S | 6-43-W76S1-022 | |
| 14 | WIRE CABLE 30PIN W/O TO LCD 220MM FOR W760S | 6-43-W76S1-010 | |
| 15 | LCD HINGE-R SECC W760S | 6-33-W76S1-021-1 | |
| 16 | ANTENNA BLUETOOTH 2.4G PCB II FROM W760S | 6-23-7W76S-021 | (OPTION) |
| 17 | ANTENNA WCDMA PCB 3G 500MM W760S | 6-23-7W76S-011 | (OPTION) |
| 18 | LCD BACK COVER MODULE W760S | 6-39-W76S1-022 | FOR W760S/TUN |
| 18 | LCD BACK COVER MODULE W760S | 6-39-W76S1-020 | FOR W760S-C |
| 18 | LCD BACK COVER MODULE W765S/SUN | 6-39-W765I-021 | FOR W765S/SUN |
| 18 | LCD BACK COVER MODULE MOFA W762S | A6-39-W7621-020 | FOR W762S |
| 18 | LCD BACK COVER MODULE IMR W763S | 6-39-W7631-020 | FOR W763S |
| 19 | ANTENNA WIMAX 2.4G/3.5G PCB W760S | 6-23-7W760-011 | (OPTION) |
| 20 | DVD BOX | 6-45-M741S-020 | |
| 21 | BACK COVER PROTECTION MYLAR 374*254MM W760S | 6-40-W76S1-052 | FOR W760/SS/SUN |
| 21 | BACK COVER PROTECTION MYLAR 374*254MM W762S | 6-40-W7631-010 | FOR W762/3S/SUN |
| 22 | [illegible] | 6-23-5W76S-011 | |
| 23 | WIRE CABLE FOR W/O TO INVERTER 150MM 6 PIN W760S | 6-43-M74SR-011 | |
| 24 | INVERTER MYLAR (FOR2+NITTOH 5010) W760S | 6-40-M76S1-010 | |
| 25 | INVERTER MODULE 6W WIDE W-MW-CIRCUIT, CHANNEL W-MAKER | 6-76-M6R6R-010 | (OPTION) |
| 25 | INVERTER MODULE 8W 5000V TYP-MW NOMWMAKER(W-C) MAKER | 6-76-M660R-011 | (OPTION) |
| 26 | SPK CABLE 200MM 5PIN 8*7 (FOR W/WIMAX-5) R-SUN W760S | 6-23-5M74S-030 | |

# HDD

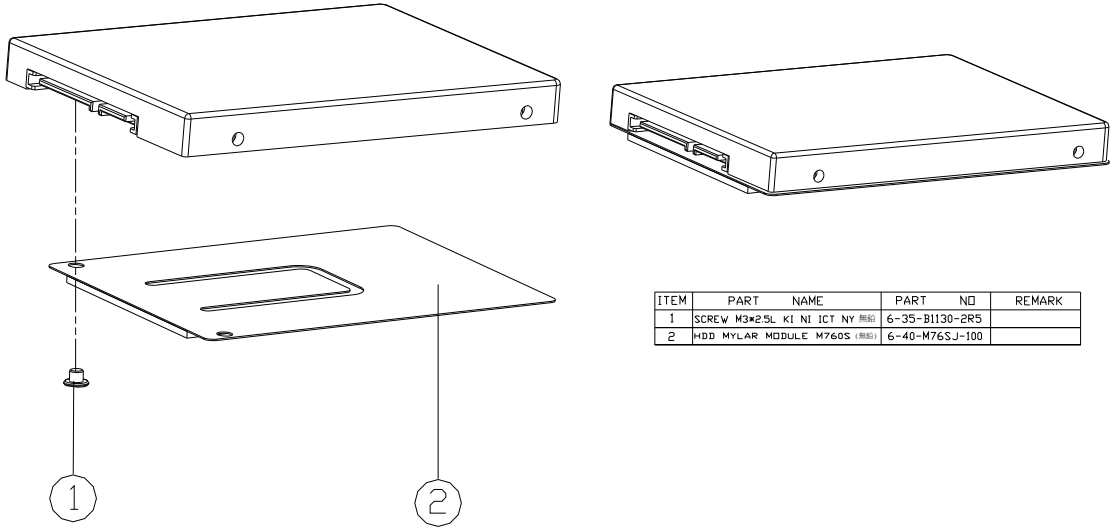


| ITEM | PART NAME | PART NO | REMARK |
|---|---|---|---|
| 1 | SCREW M3*2.5L K1 NI ICT NY 無鉛 | 6-35-B1130-2R5 | |
| 2 | HDD MYLAR MODULE M760S (無鉛) | 6-40-M76SJ-100 | |

# SATA DVD SUPER-MULTI



*Figure A - 8*
**SATA DVD SUPER-MULTI**

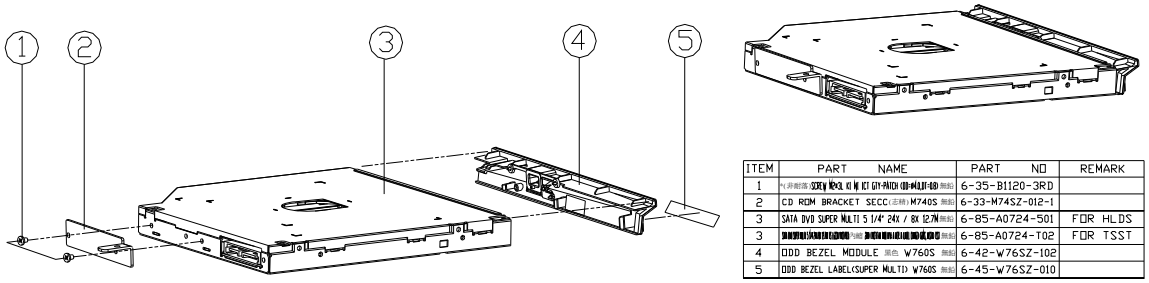


| ITEM | PART NAME | PART NO | REMARK |
|---|---|---|---|
| 1 | ㈜(非耐蝕)SCREW M3X3L K1 N JC1 (J1-PAIOK (B)-MOLJIF-6B) 無鉛 | 6-35-B1120-3RD | |
| 2 | CD ROM BRACKET SECC(三防材) M740S 無鉛 | 6-33-M74SZ-012-1 | |
| 3 | SATA DVD SUPER MULTI 5 1/4" 24X / 8X 12.7M 無鉛 | 6-85-A0724-501 | FOR HLDS |
| 3 | [redacted] 無鉛 | 6-85-A0724-T02 | FOR TSST |
| 4 | ODD BEZEL MODULE 黑色 W760S 無鉛 | 6-42-W76SZ-102 | |
| 5 | ODD BEZEL LABEL(SUPER MULTI) W760S 無鉛 | 6-45-W76SZ-010 | |

# Appendix B: Schematic Diagrams

This appendix has circuit diagrams of the ***W760SUN*** notebook's PCB's. The following table indicates where to find the appropriate schematic diagram.

| Diagram - Page | Diagram - Page | Diagram - Page |
|---|---|---|
| *System Block Diagram - Page B - 2* | *External VGA N10M-GE1-7 - Page B - 18* | *LED, PC Beep, TP, FP - Page B - 34* |
| *Penryn (Socket-P) 1/2 - Page B - 3* | *Panel, CRT - Page B - 19* | *System/Ext-VGA Power - Page B - 35* |
| *Penryn (Socket-P) 2/2 - Page B - 4* | *Inverter, Bluetooth, Fan - Page B - 20* | *AC-IN, Charger - Page B - 36* |
| *SiSM672 Host, PCIE 1/5 - Page B - 5* | *968 PCI, IDE, MuTIOL, SPI 1/4 - Page B - 21* | *VCORE - Page B - 37* |
| *SiSM672 DRAM 2/5 - Page B - 6* | *968 PCIE, LAN, GPIO 2/4 - Page B - 22* | *VDD3, VDD5) - Page B - 38* |
| *SiSM672 MuTIOL VGA 3/5 - Page B - 7* | *968 USB SATA 3/4 - Page B - 23* | *1.05VS, 1.2V, 1.5V - Page B - 39* |
| *SiSM672 PWR 4/5 - Page B - 8* | *968 PWR, GND 4/4 - Page B - 24* | *1.8V, 0.9VS - Page B - 40* |
| *SiSM672 GND 5/5 - Page B - 9* | *Clock Generator & Clock Buffer - Page B - 25* | *Click BD, Finger BD for M76 - Page B - 41* |
| *DDRII SO-DIMM - 1 - Page B - 10* | *PHY Realtek 8201CL - Page B - 26* | *Multi Function Board - Page B - 42* |
| *DDRII SO-DIMM - 2 - Page B - 11* | *KBC ITE8512E - Page B - 27* | *Audio Board - Page B - 43* |
| *External VGA N10M-GE1-1 - Page B - 12* | *JMB385, Card Reader - Page B - 28* | *Finger Sensor Board - Page B - 44* |
| *External VGA N10M-GE1-2 - Page B - 13* | *Audio Codec ALC662 - Page B - 29* | *Power Switch Board for M74 - Page B - 45* |
| *External VGA N10M-GE1-3 - Page B - 14* | *Audio AMP - Page B - 30* | *External ODD Board for W76 - Page B - 46* |
| *External VGA N10M-GE1-4 - Page B - 15* | *SATA HDD, PWR, LID - Page B - 31* | |
| *External VGA N10M-GE1-5 - Page B - 16* | *Multi I/O, ODD, 3G, Click BD for M74 - Page B - 32* | |
| *External VGA N10M-GE1-6 - Page B - 17* | *New Card, Mini PCIE, USB - Page B - 33* | |

*Table B - 1*
**Schematic Diagrams**

**Version Note**

The schematic diagrams in this chapter are based upon version 6-7P-M74SA-001. If your mainboard (or other boards) are a later version, please check with the Service Center for updated diagrams (if required).

# System Block Diagram

Sheet 1 of 45
System Block Diagram

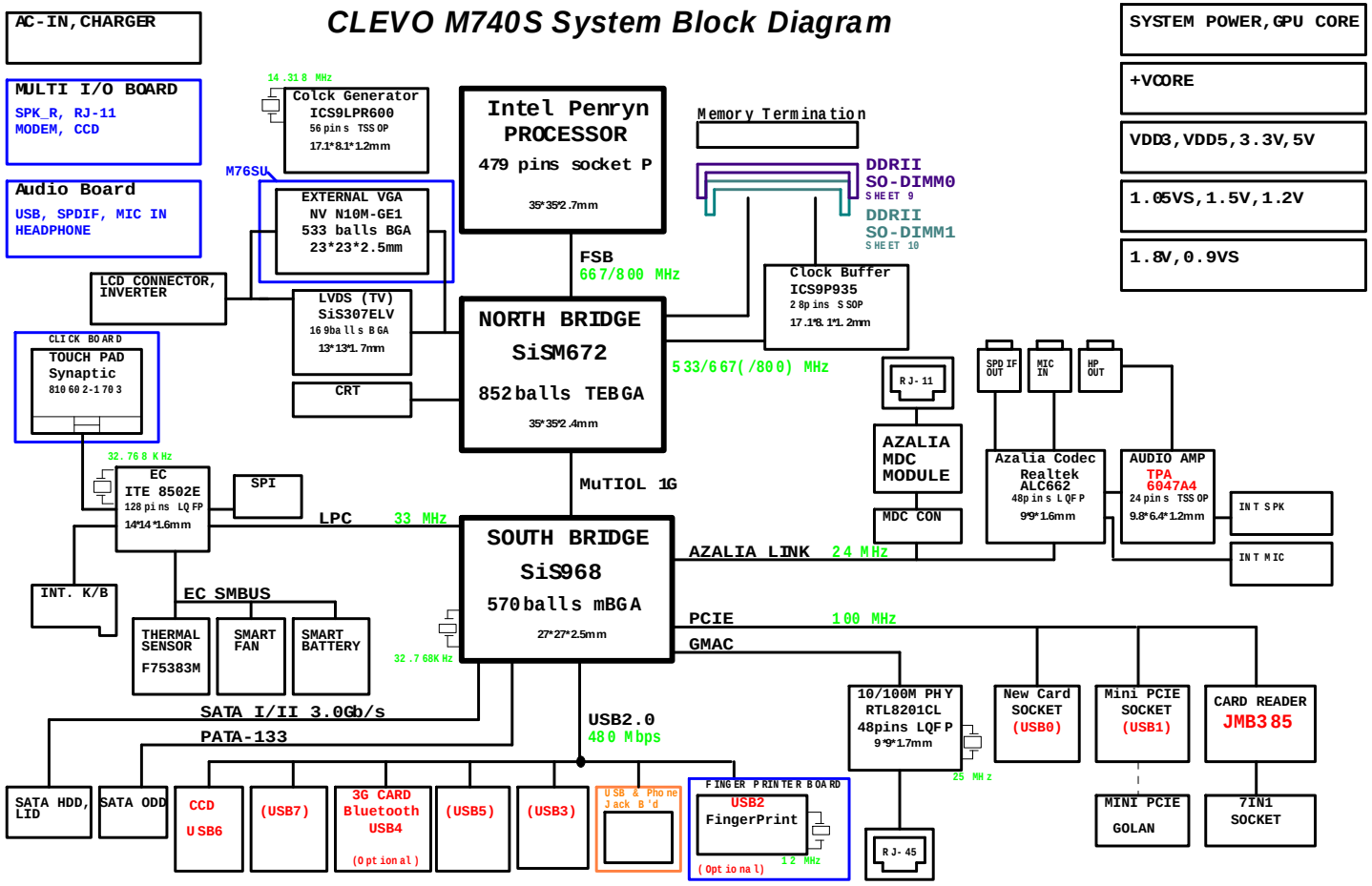

# Penryn (Socket-P) 1/2

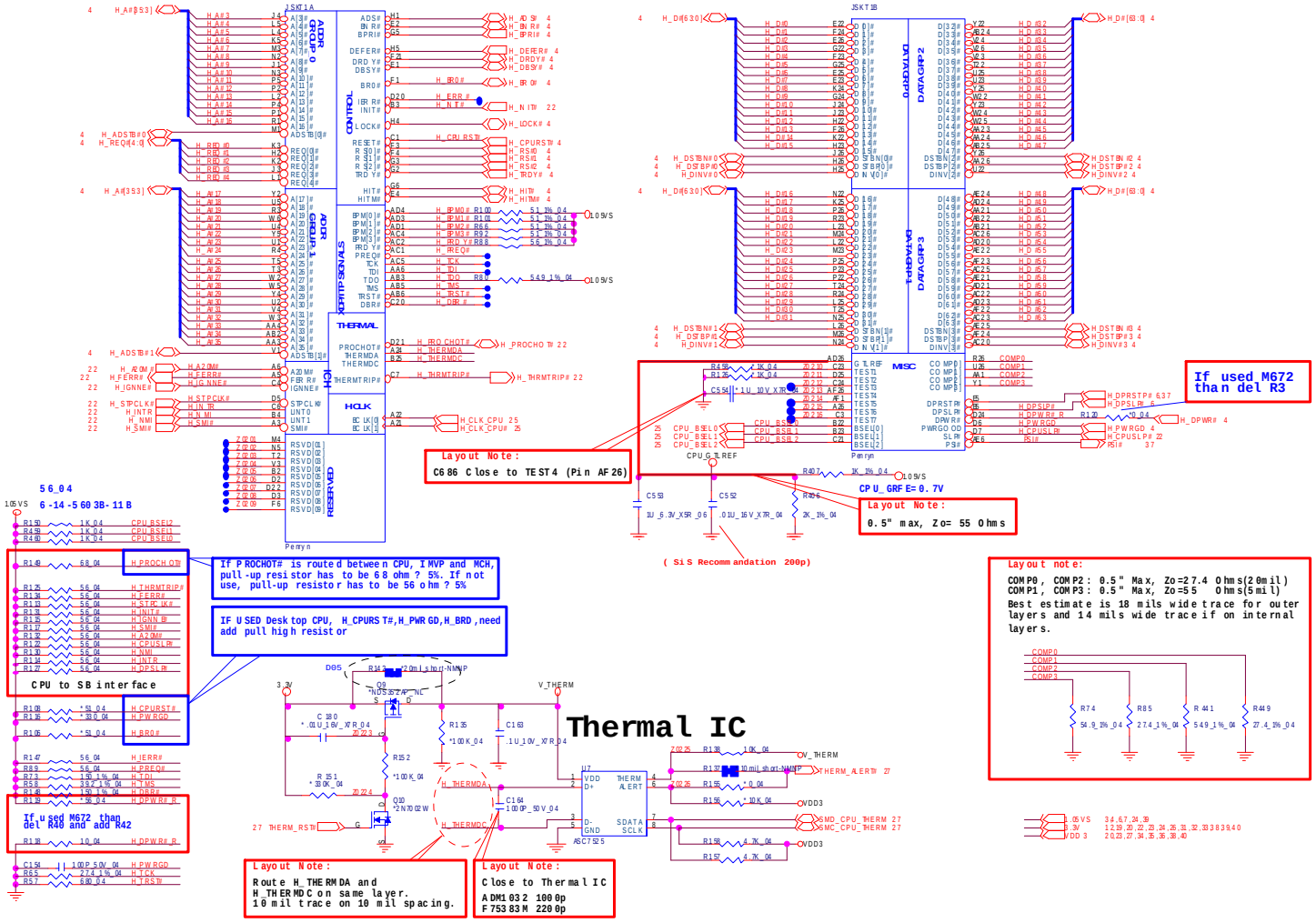


Sheet 2 of 45
Penryn (Socket-P)
1/2

# Penryn (Socket-P) 2/2



**Sheet 3 of 45**
**Penryn (Socket-P) 2/2**

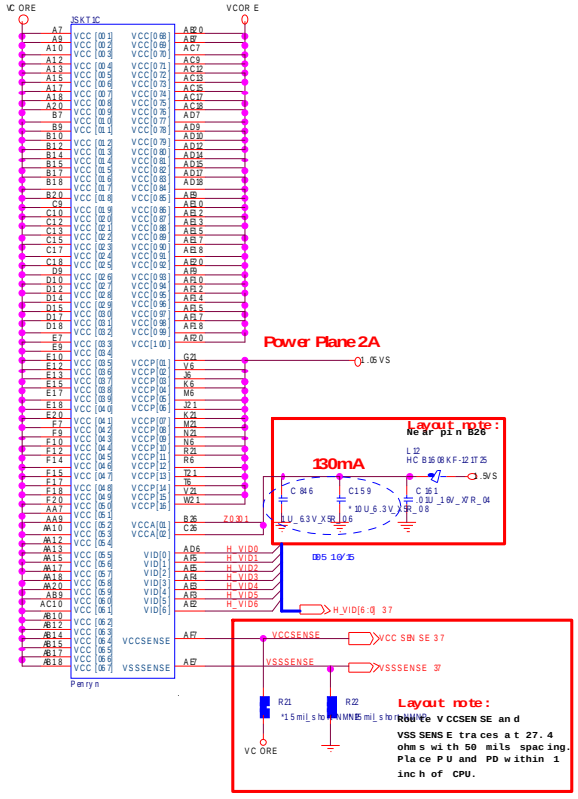


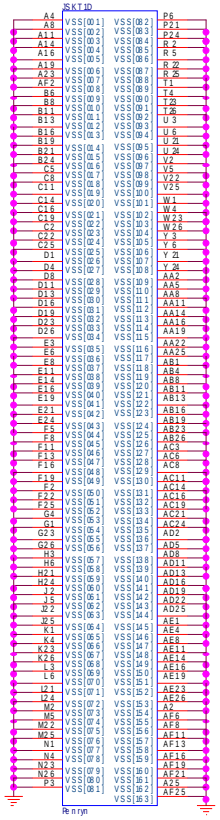


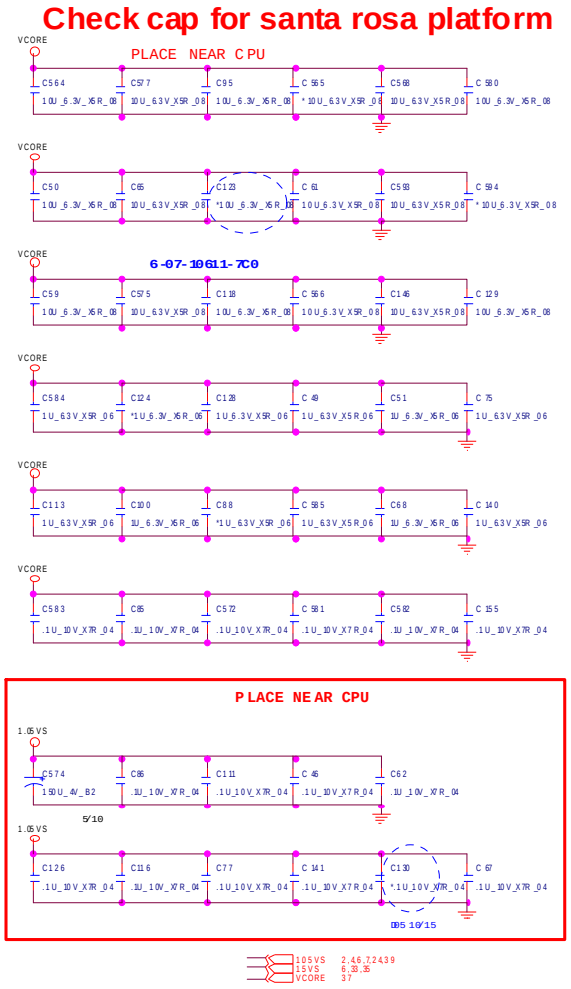

# SiSM672 Host, PCIE 1/5

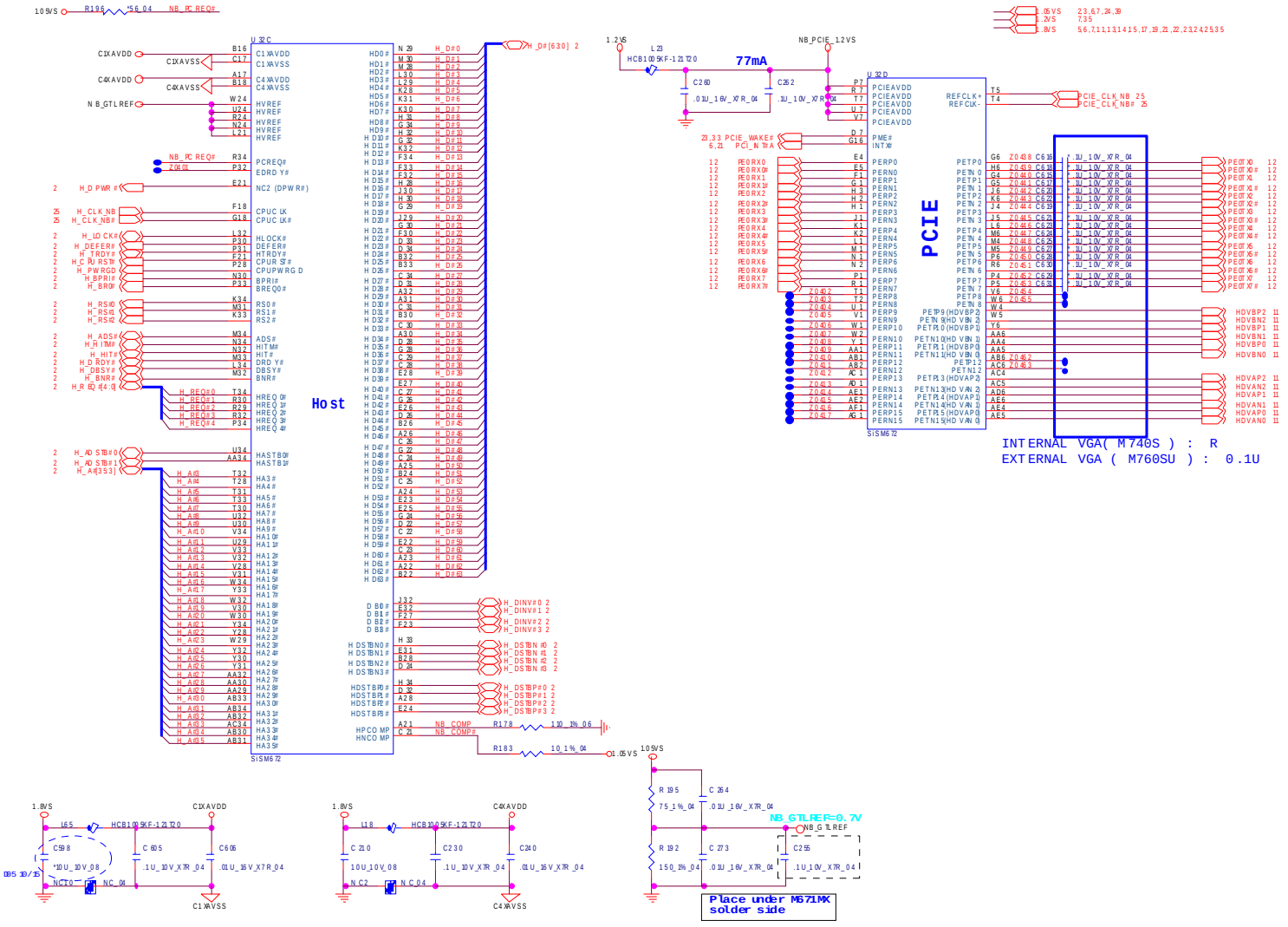


Sheet 4 of 45
SiSM672 Host, PCIE 1/5

# SiSM672 DRAM 2/5



**Sheet 5 of 45**
**SiSM672 DRAM 2/5**

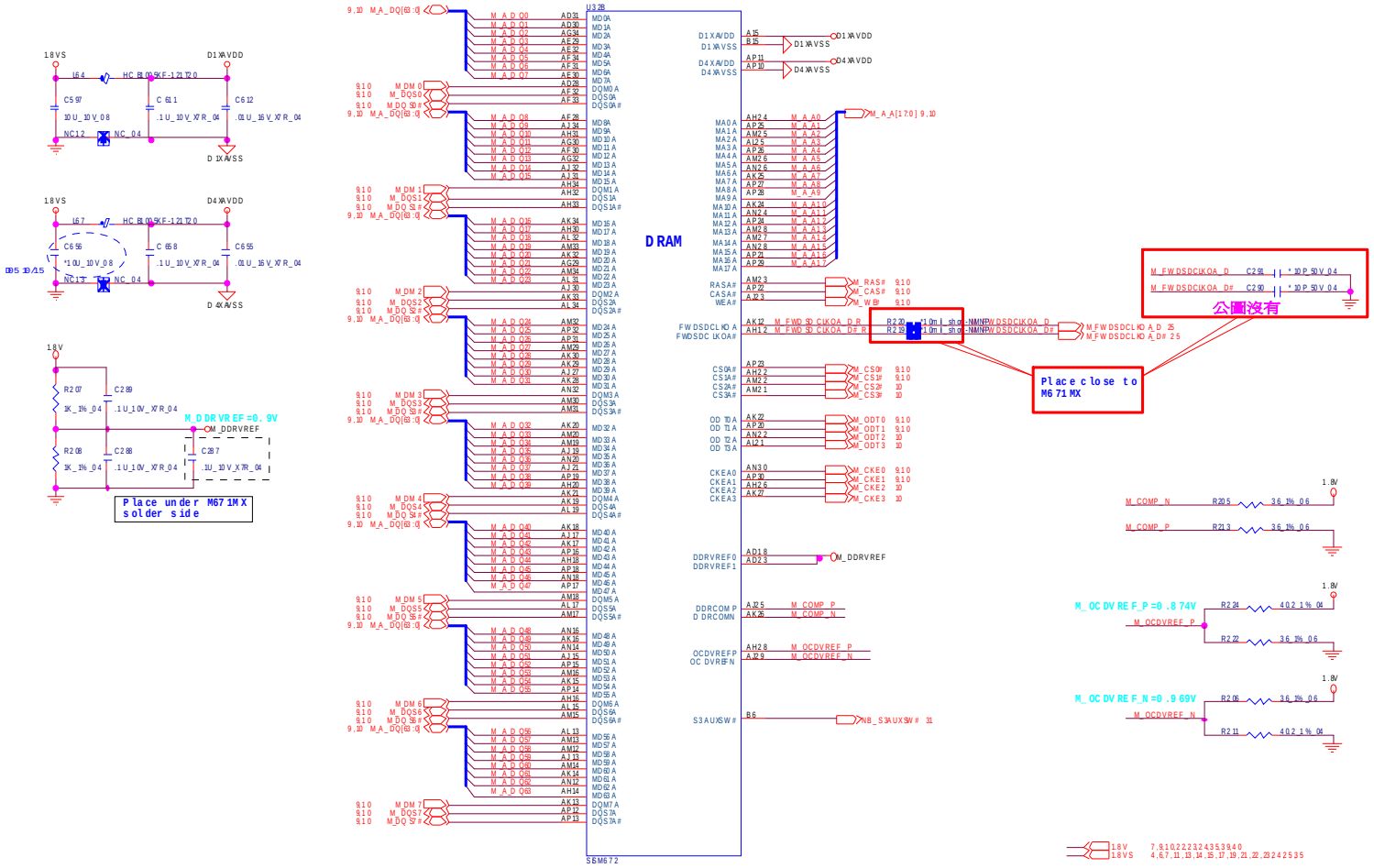

# SiSM672 MuTIOL VGA 3/5

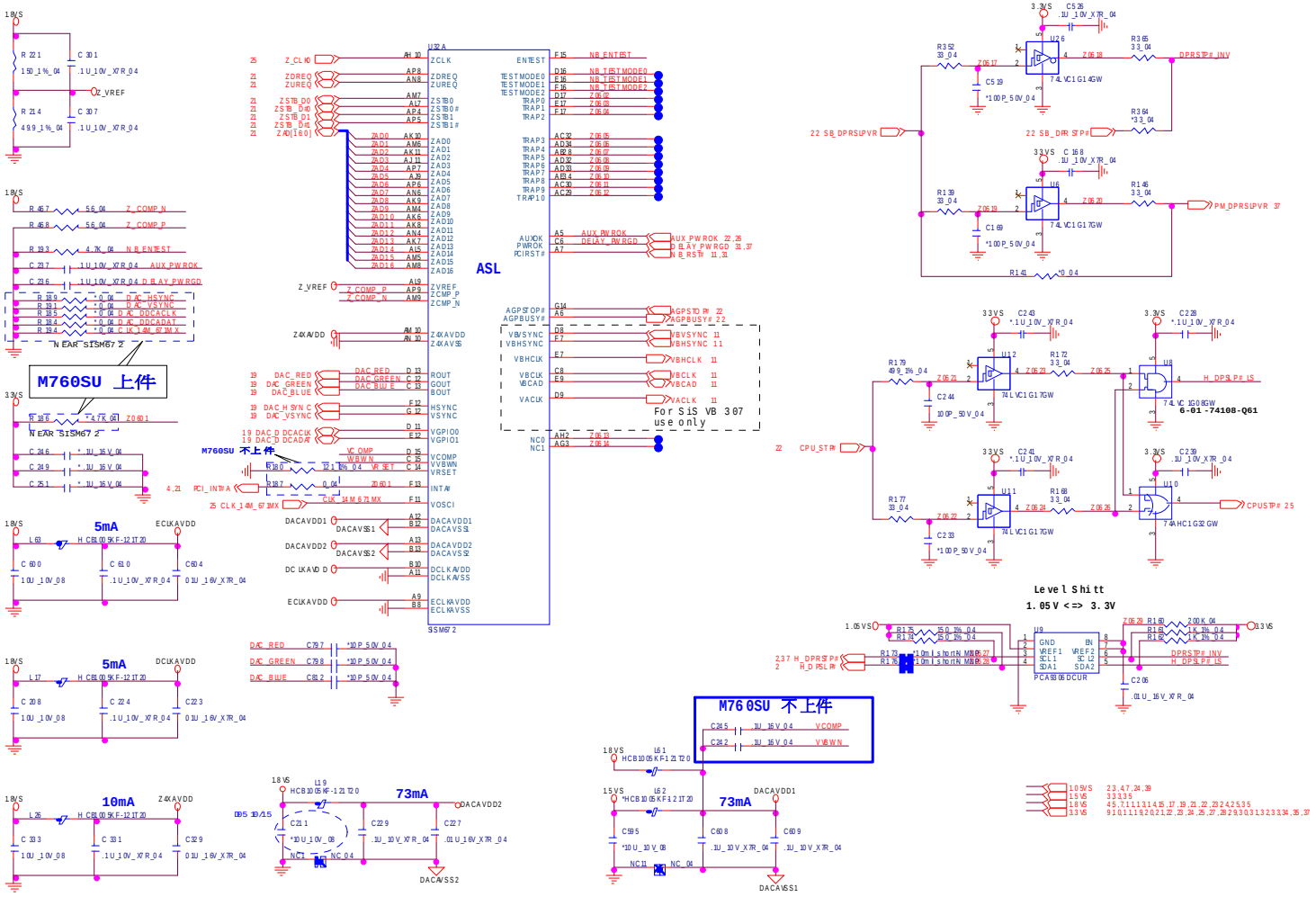


Sheet 6 of 45
SiSM672 MuTIOL VGA 3/5

# SiSM672 PWR 4/5



**Sheet 7 of 45**
**SiSM672 PWR 4/5**

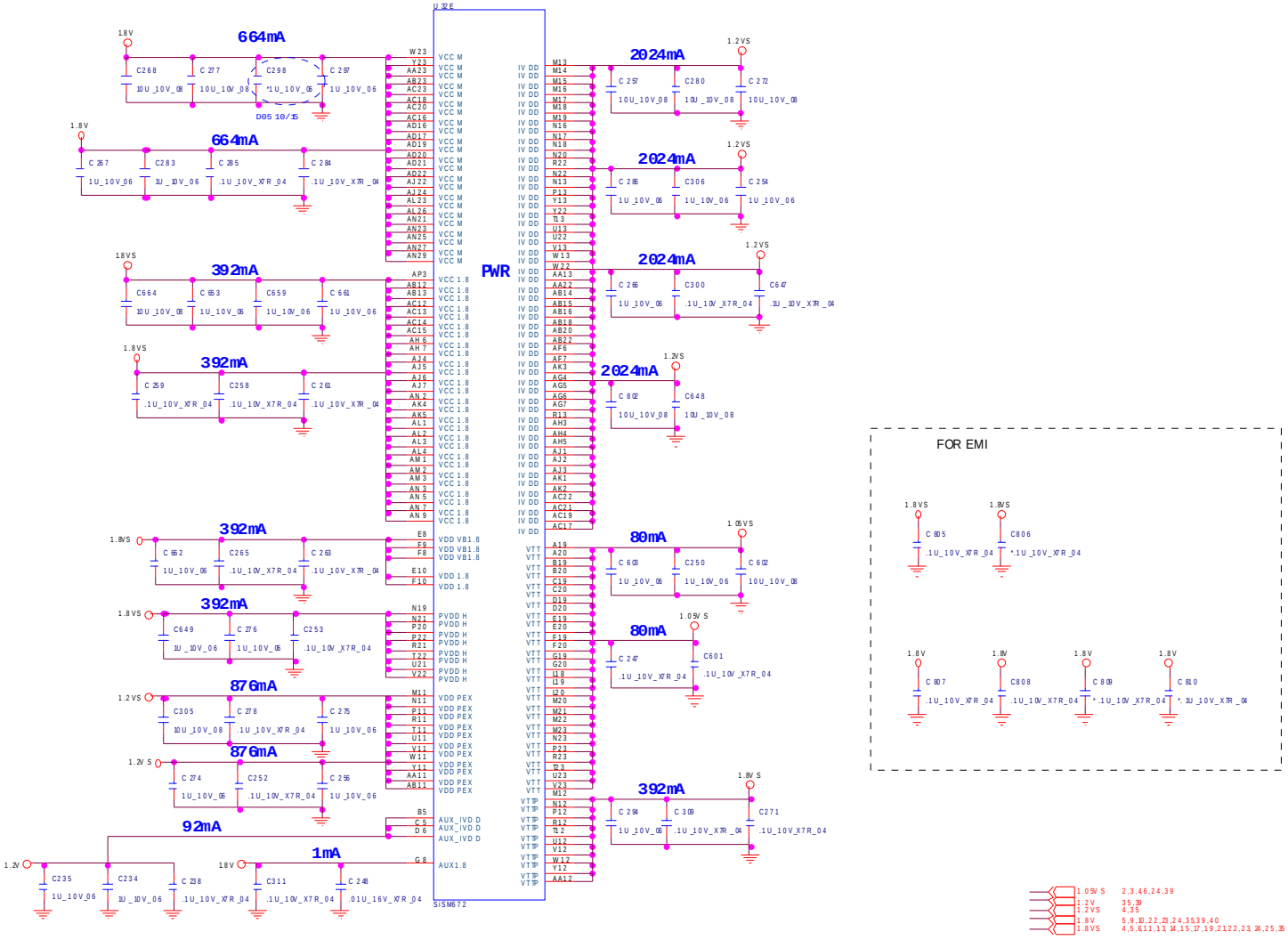

# SiSM672 GND 5/5

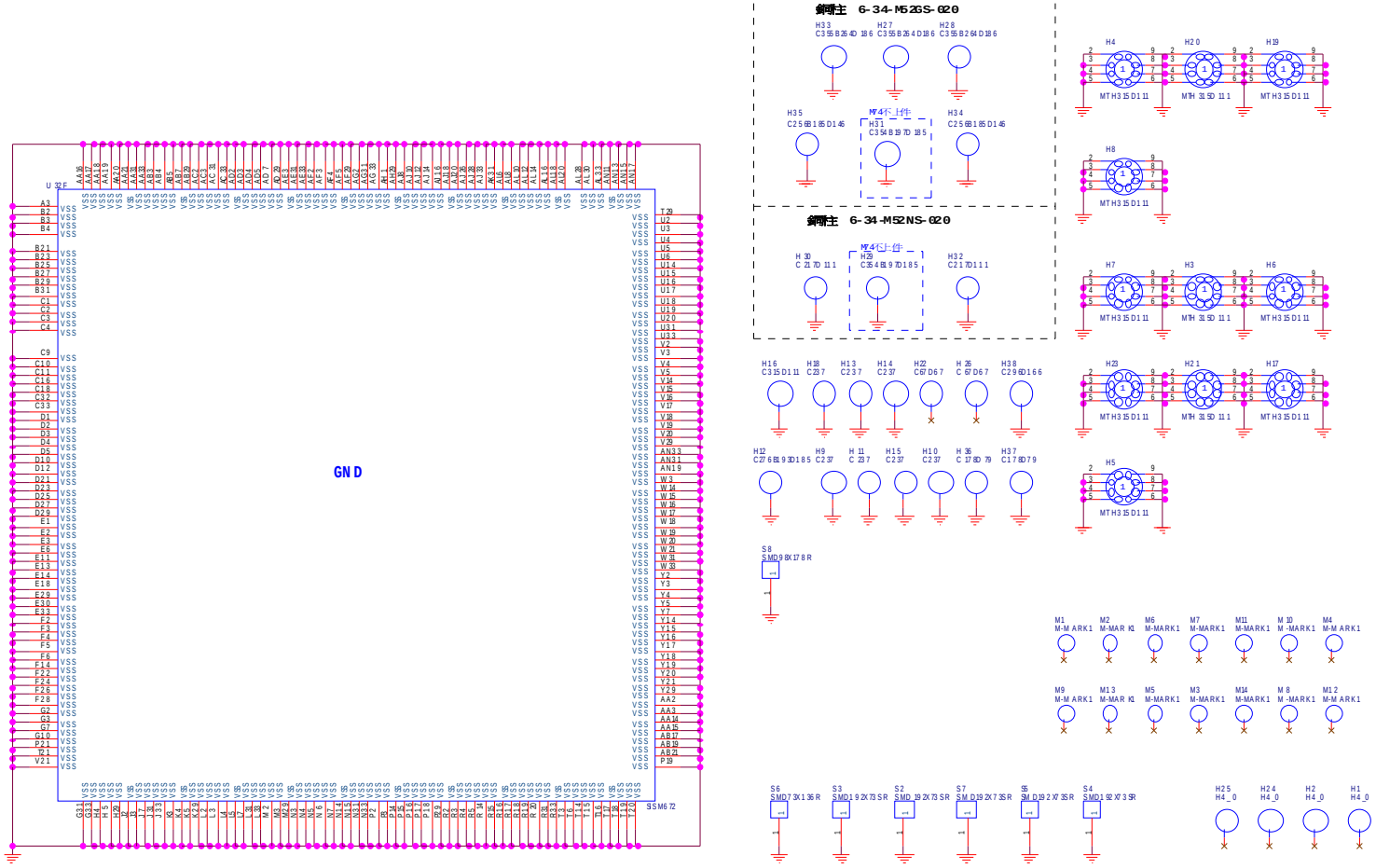


Sheet 8 of 45
SiSM672 GND 5/5

# DDRII SO-DIMM - 1



## SO-DIMM 1

**Sheet 9 of 45**
**DDRII SO-DIMM - 1**

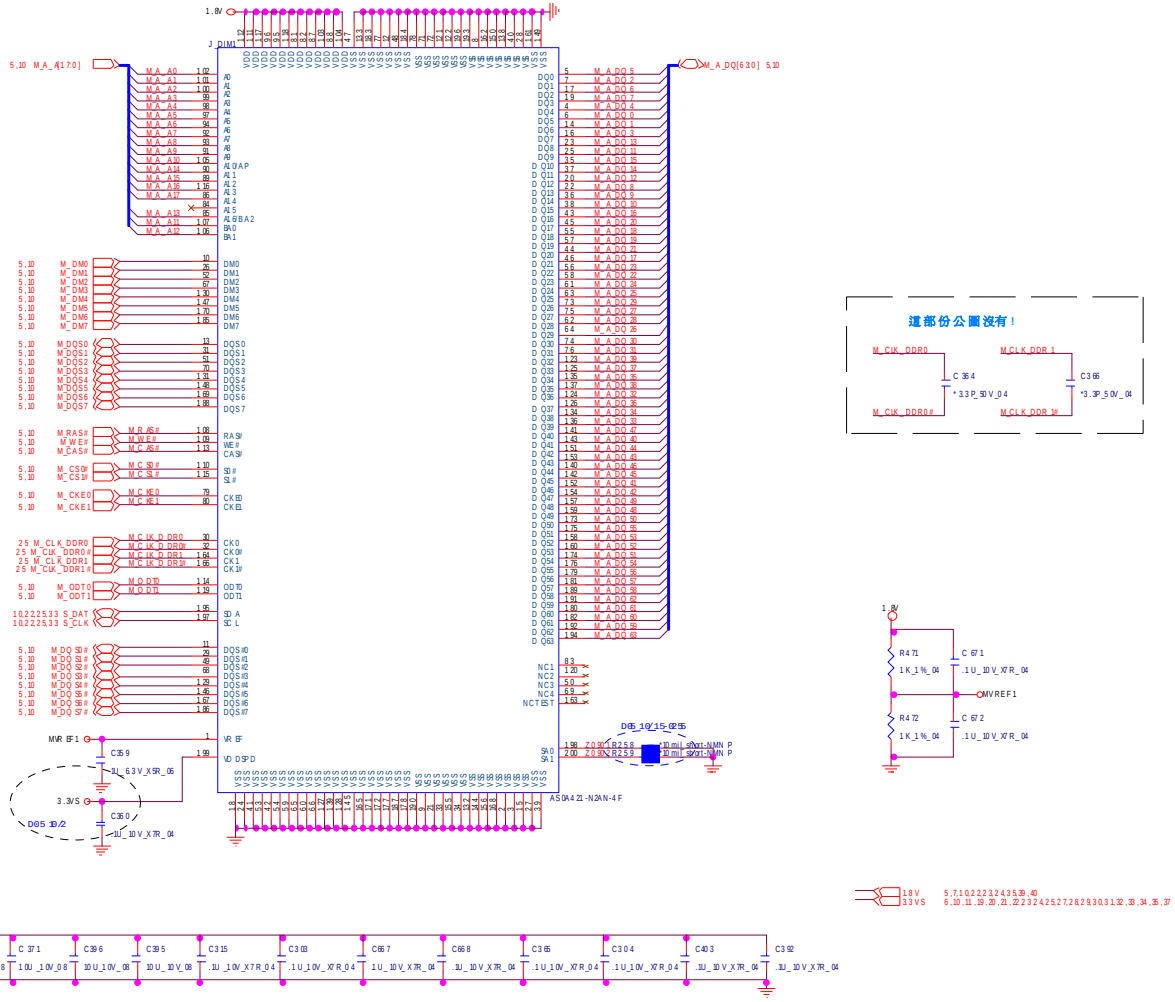

# DDRII SO-DIMM - 2

## SO-DIMM 2

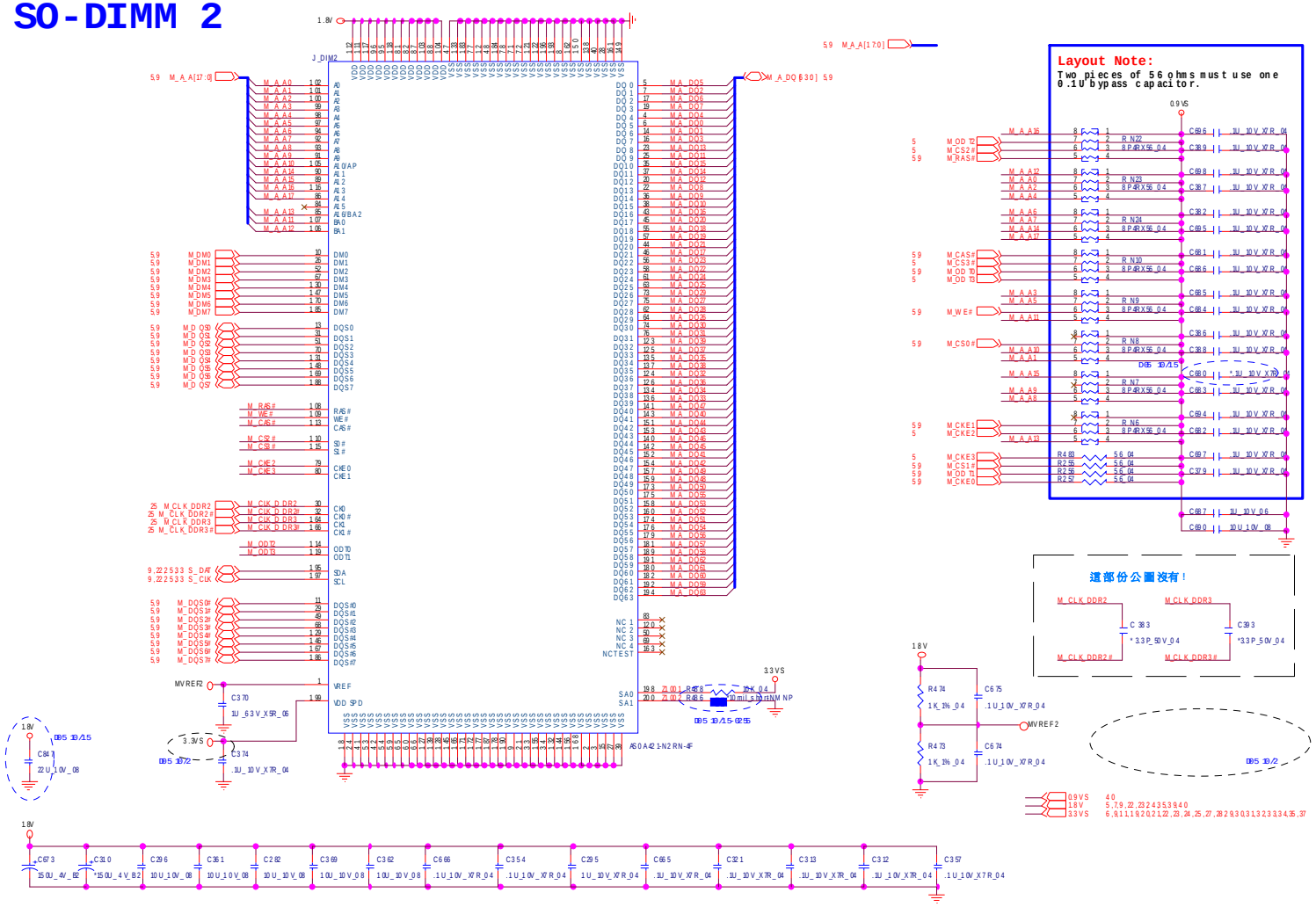


Sheet 10 of 45
DDRII SO-DIMM - 2

# External VGA N10M-GE1-1



**Sheet 11 of 45**
**External VGA**
**N10M-GE1-1**

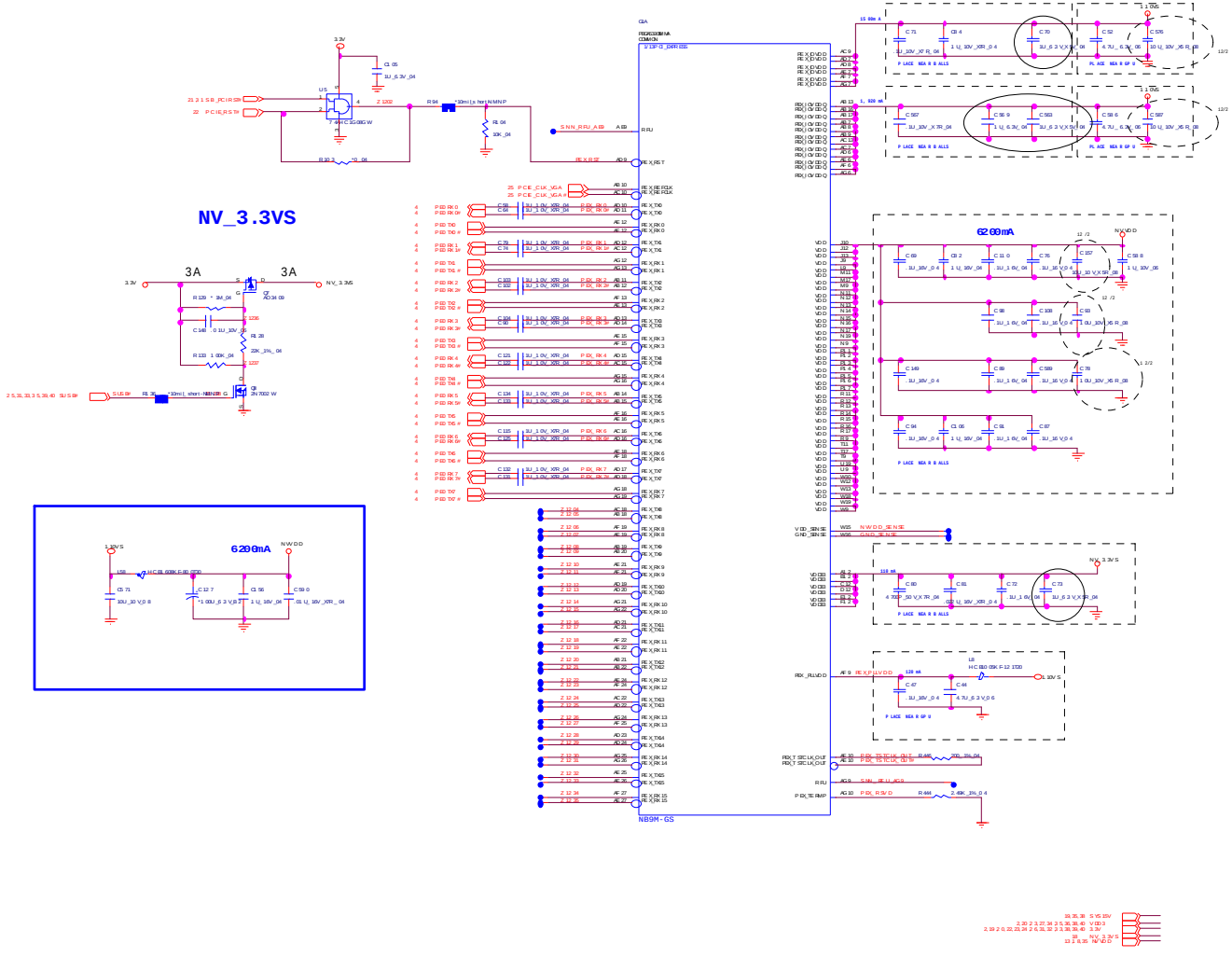

# External VGA N10M-GE1-2

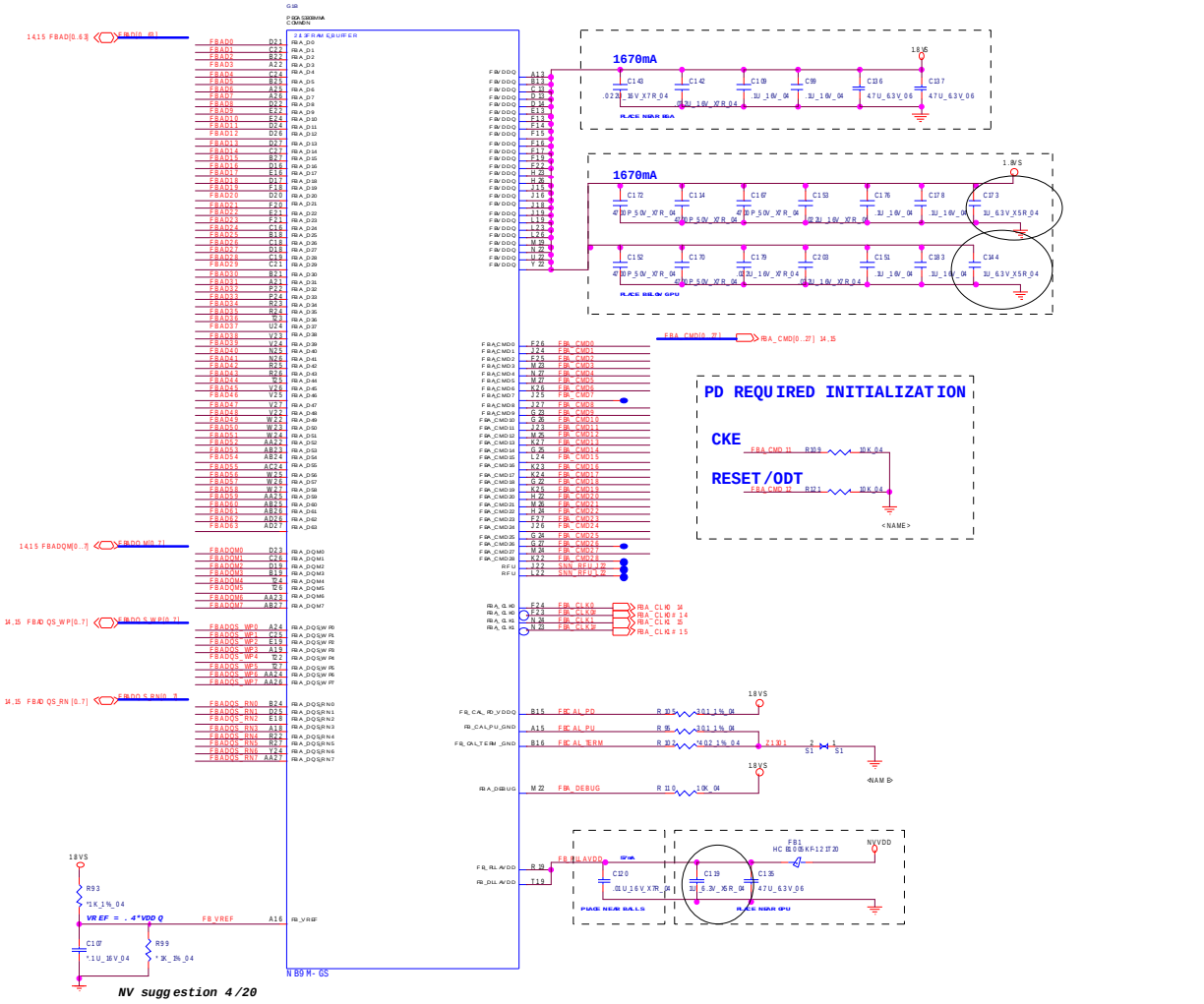


Sheet 12 of 45
External VGA
N10M-GE1-2

# External VGA N10M-GE1-3



**Sheet 13 of 45**
**External VGA**
**N10M-GE1-3**

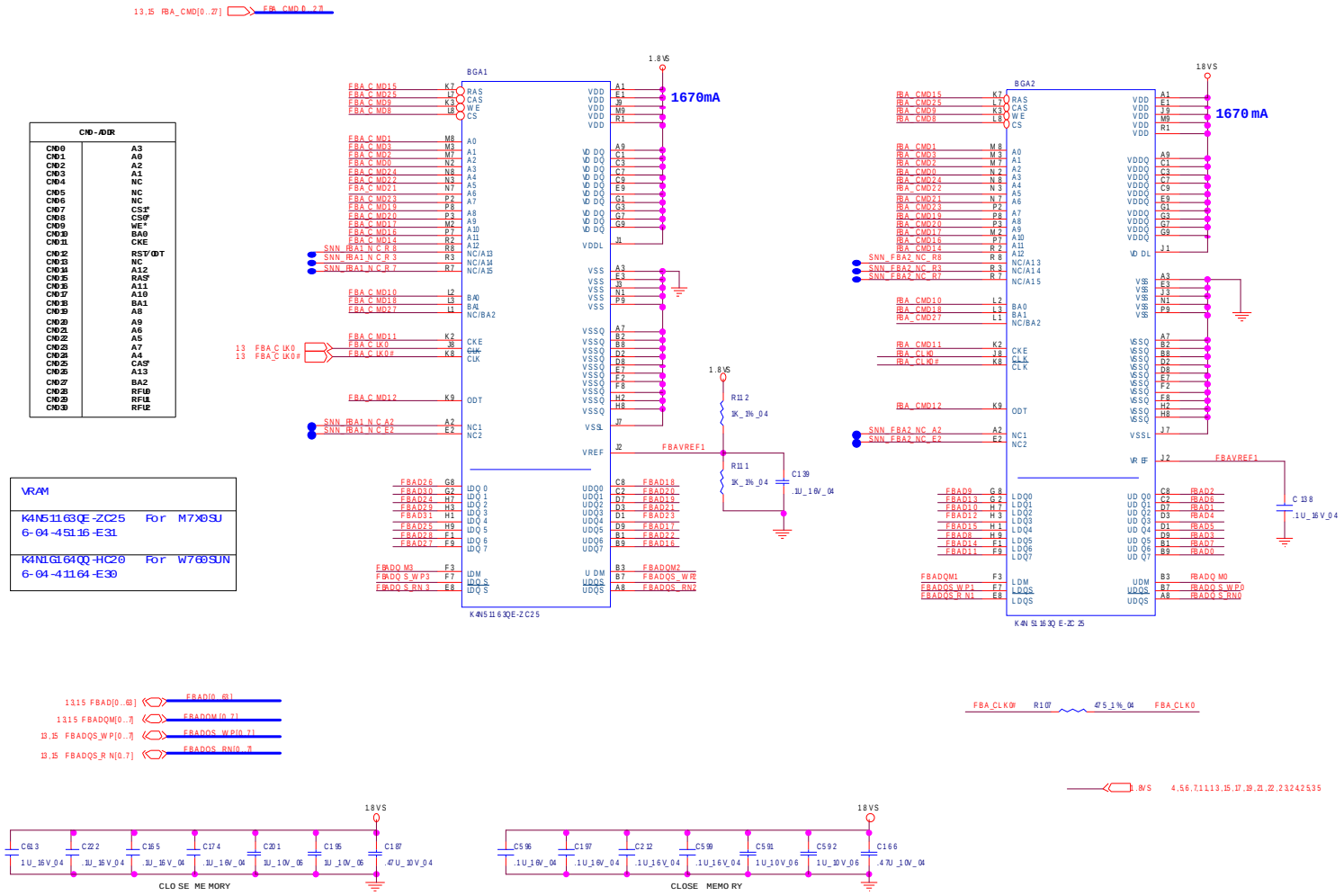

# External VGA N10M-GE1-4

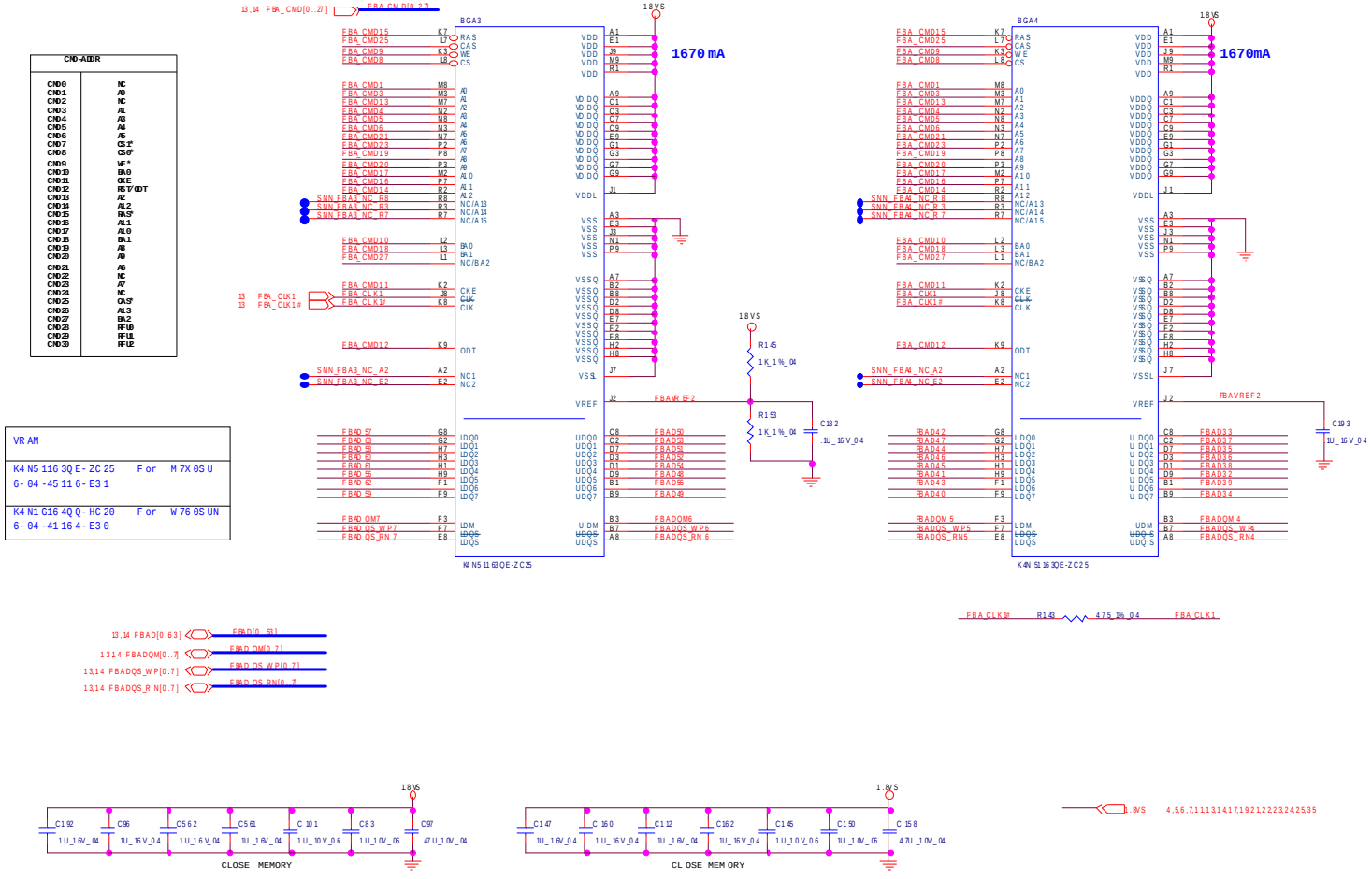


Sheet 14 of 45
External VGA
N10M-GE1-4

# External VGA N10M-GE1-5

**Sheet 15 of 45**
**External VGA**
**N10M-GE1-5**

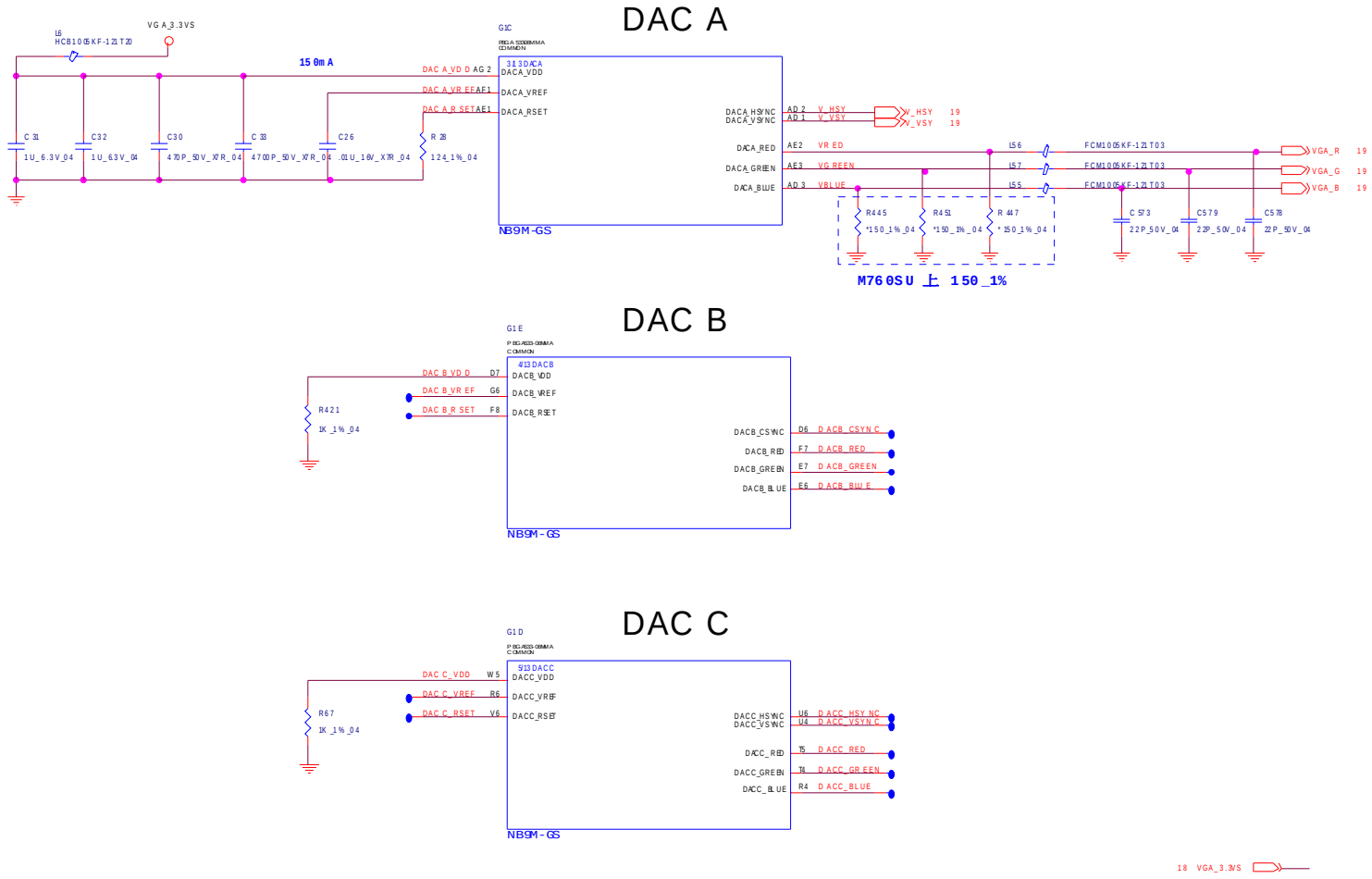

# External VGA N10M-GE1-6

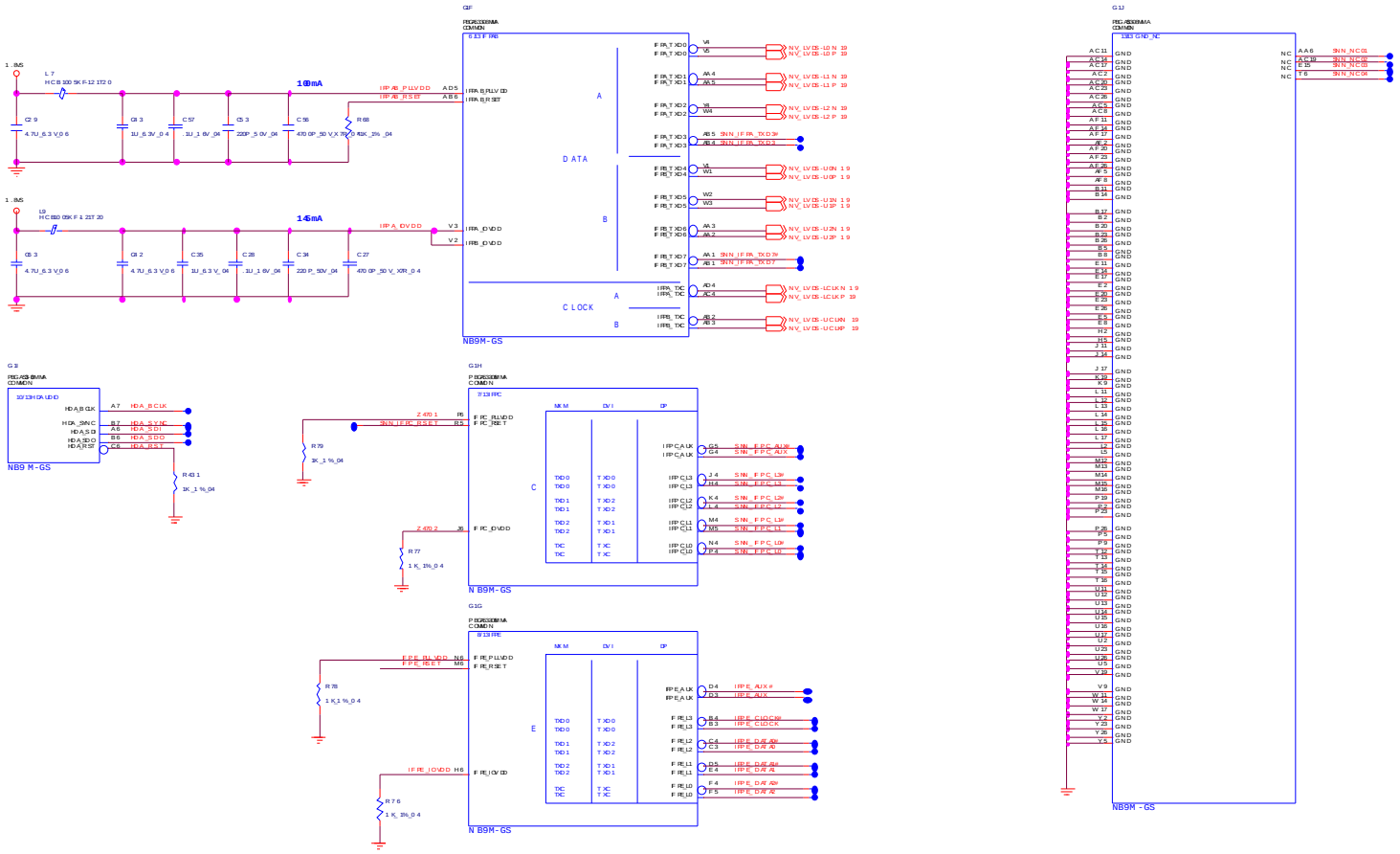


Sheet 16 of 45
External VGA
N10M-GE1-6

# External VGA N10M-GE1-7



**Sheet 17 of 45**
**External VGA**
**N10M-GE1-7**

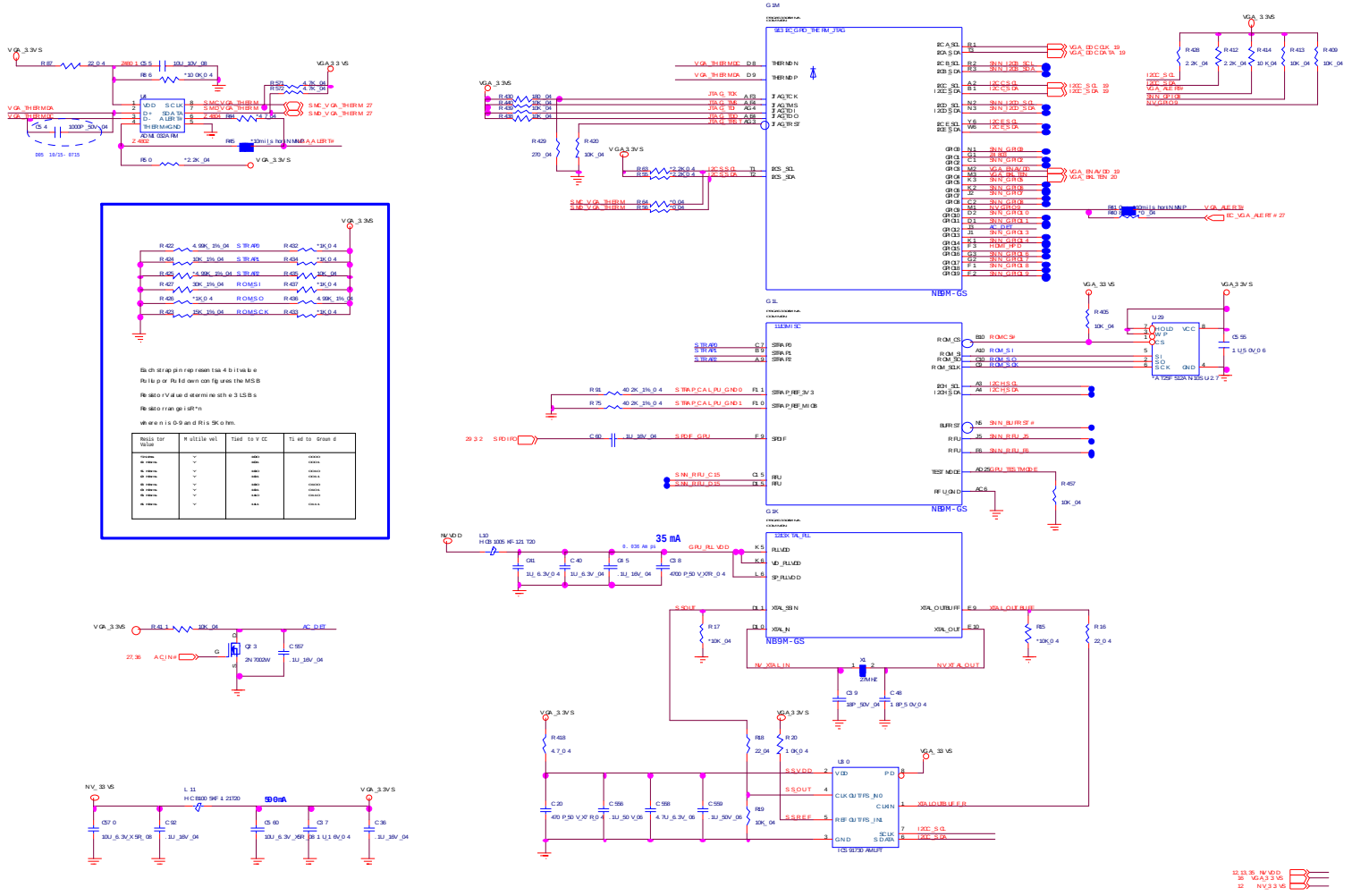

# Panel, CRT

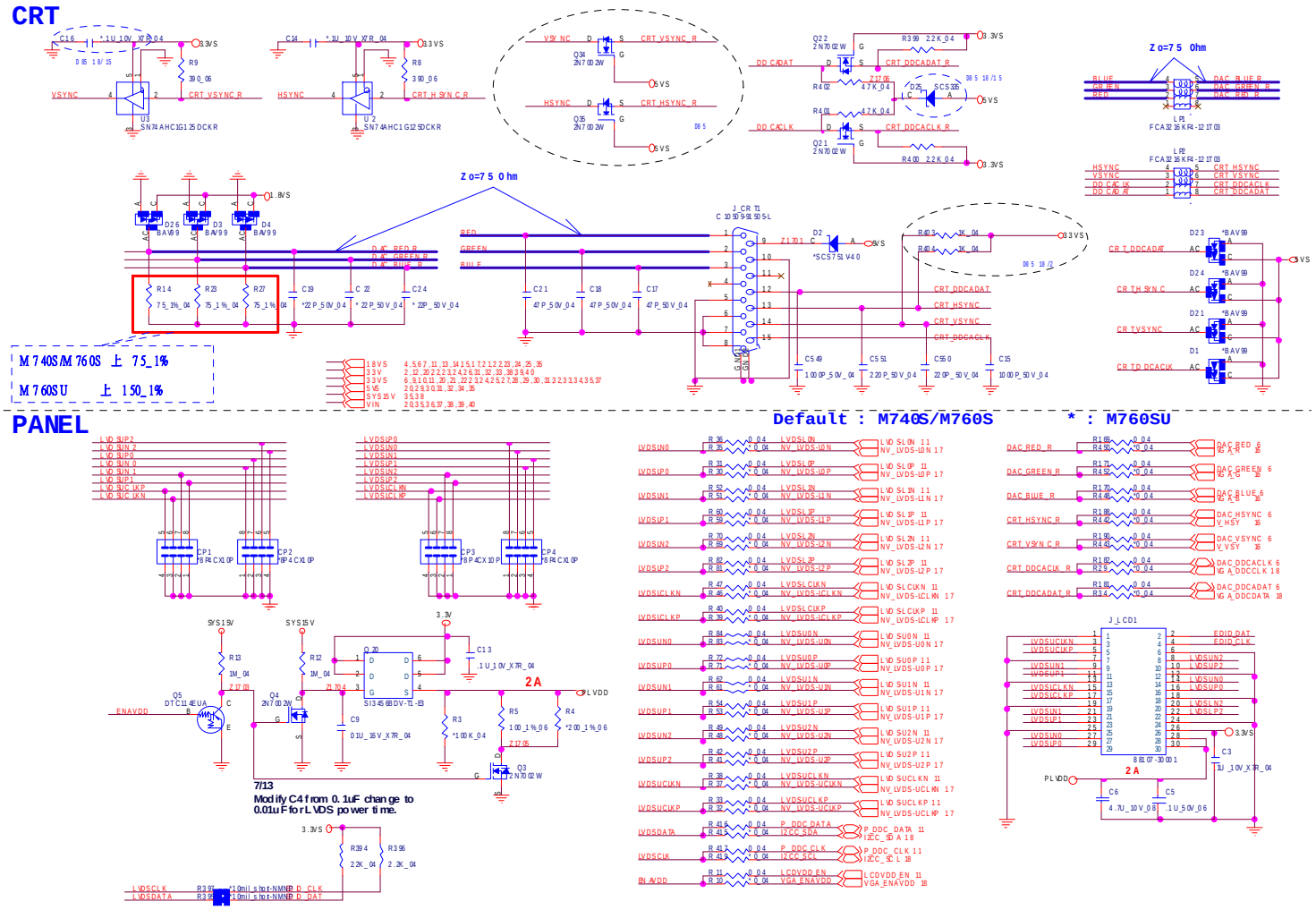


Sheet 18 of 45
Panel, CRT

# Inverter, Bluetooth, Fan



**Sheet 19 of 45**
**Inverter, Bluetooth, Fan**

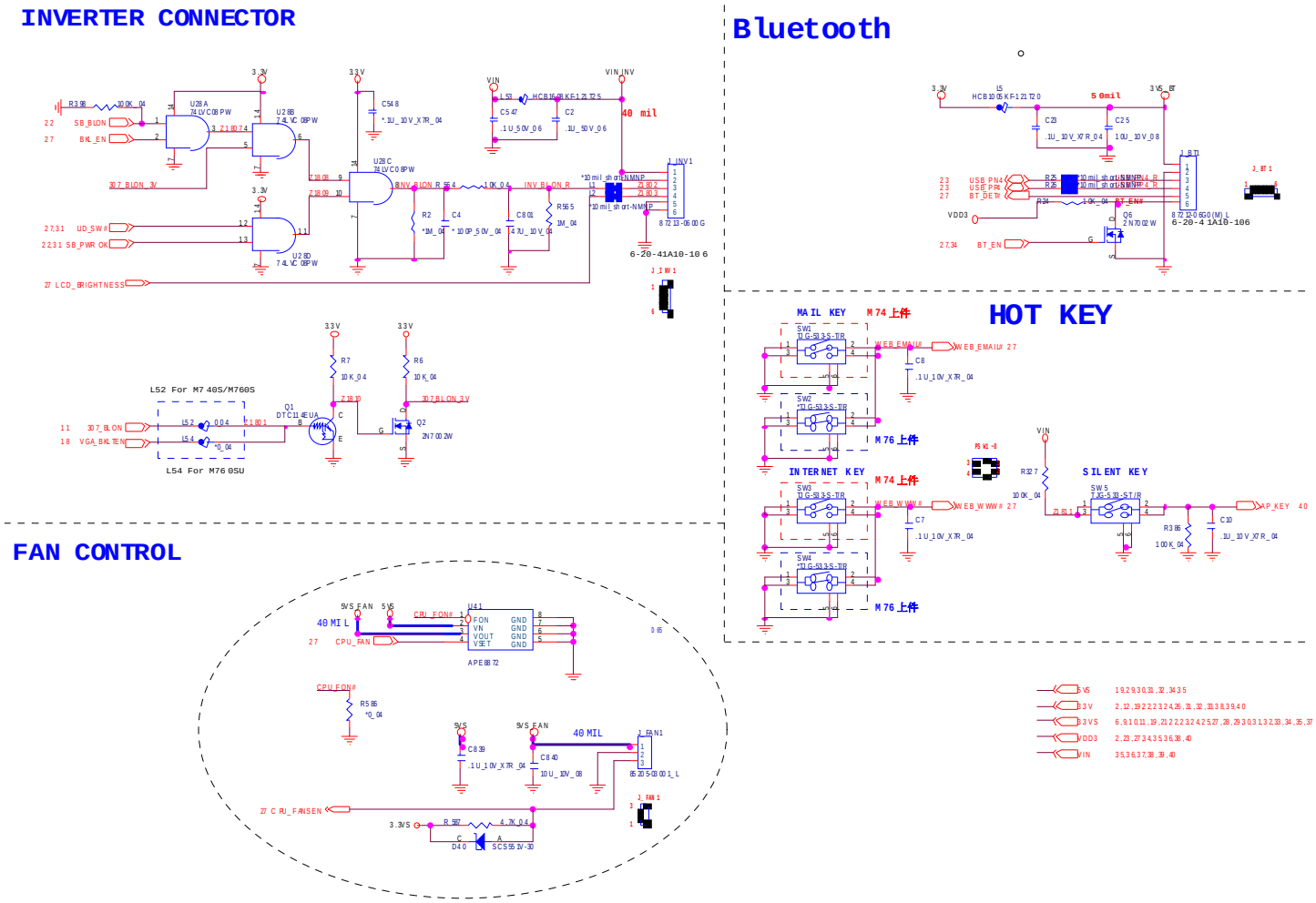

# 968 PCI, IDE, MuTIOL, SPI 1/4

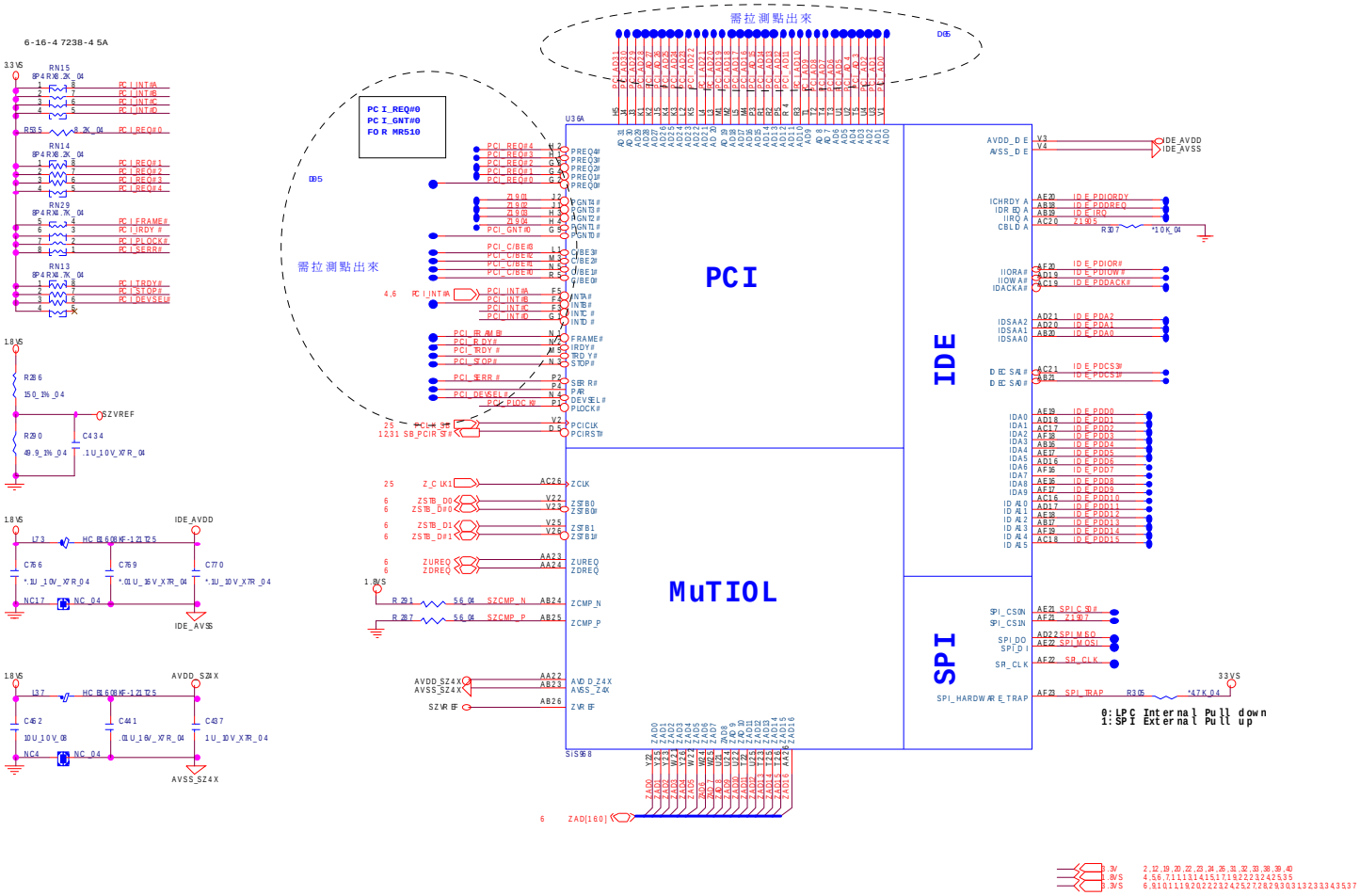


Sheet 20 of 45
968 PCI, IDE,
MuTIOL, SPI 1/4

# 968 PCIE, LAN, GPIO 2/4



**Sheet 21 of 45**
**968 PCIE, LAN, GPIO 2/4**

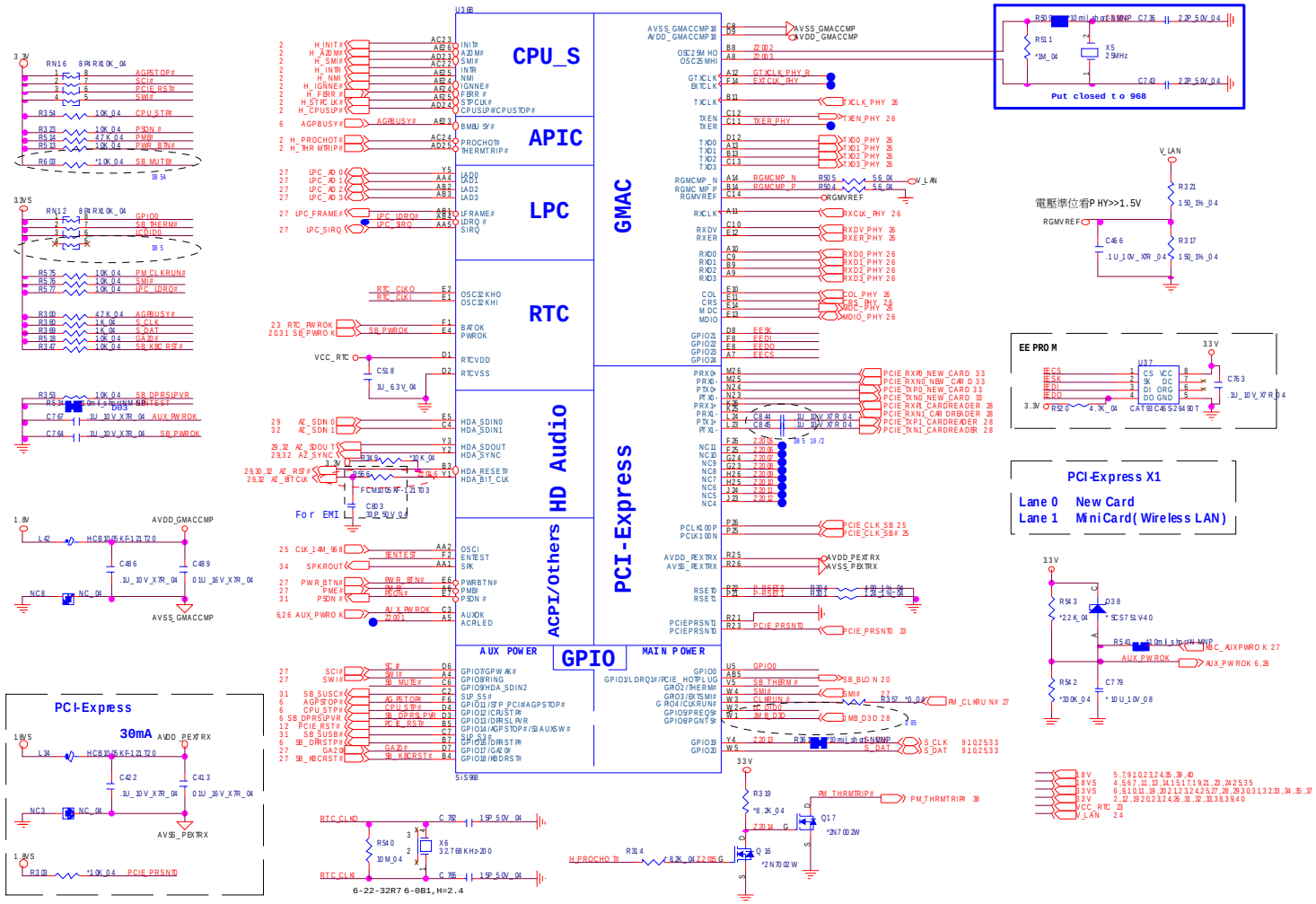

# 968 USB SATA 3/4

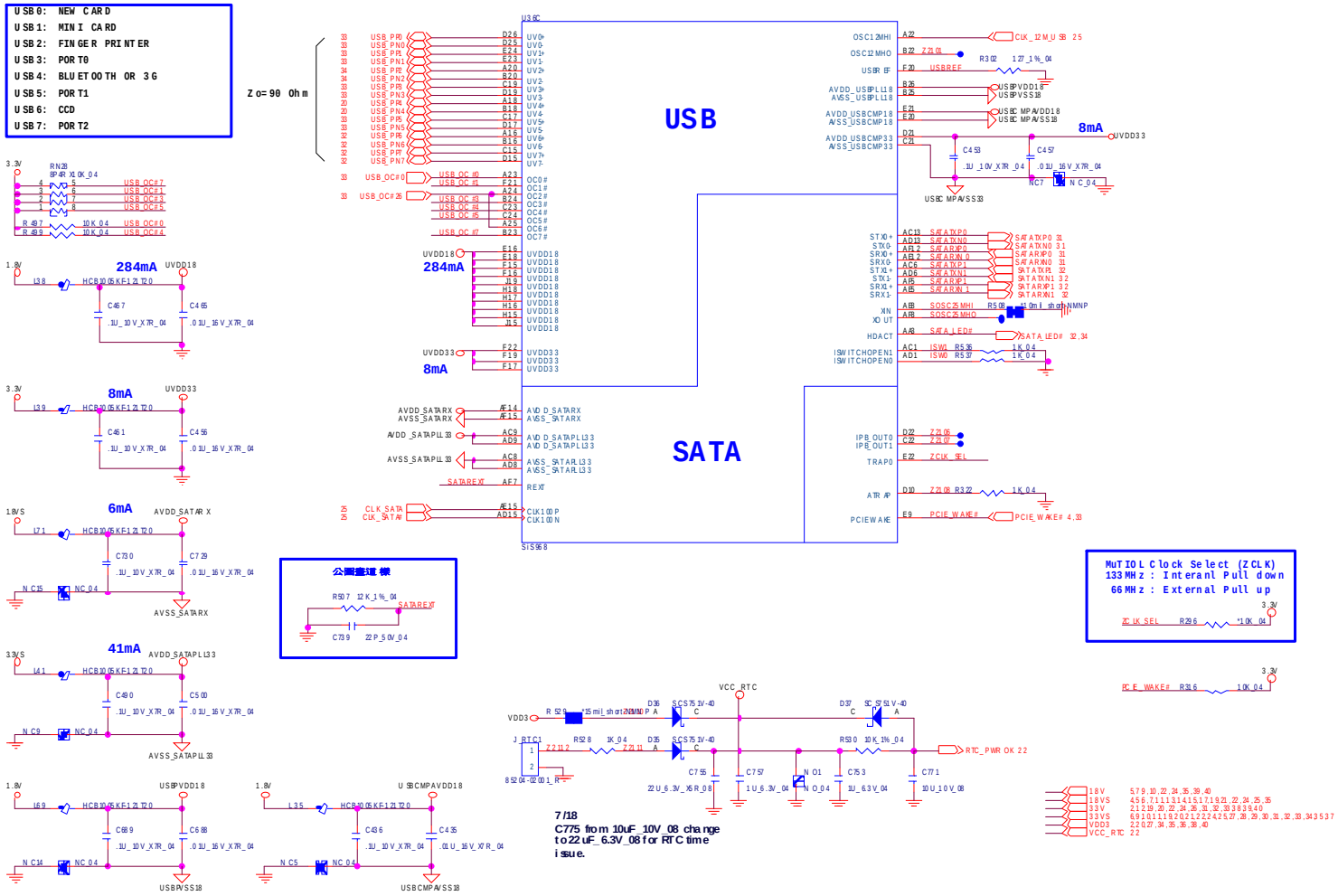


Sheet 22 of 45
968 USB SATA 3/4

# 968 PWR, GND 4/4



**Sheet 23 of 45**
**968 PWR, GND 4/4**

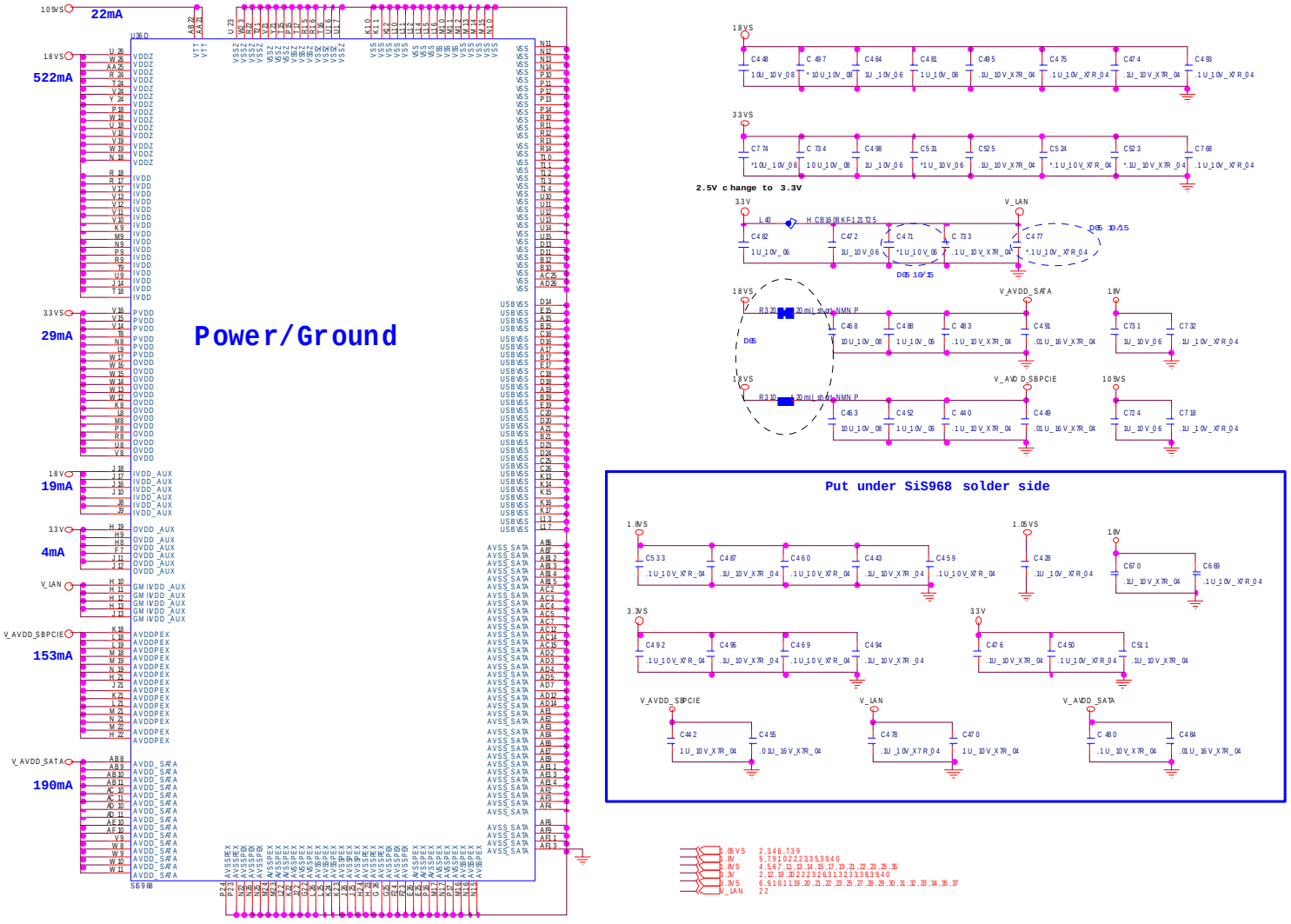

# Clock Generator & Clock Buffer

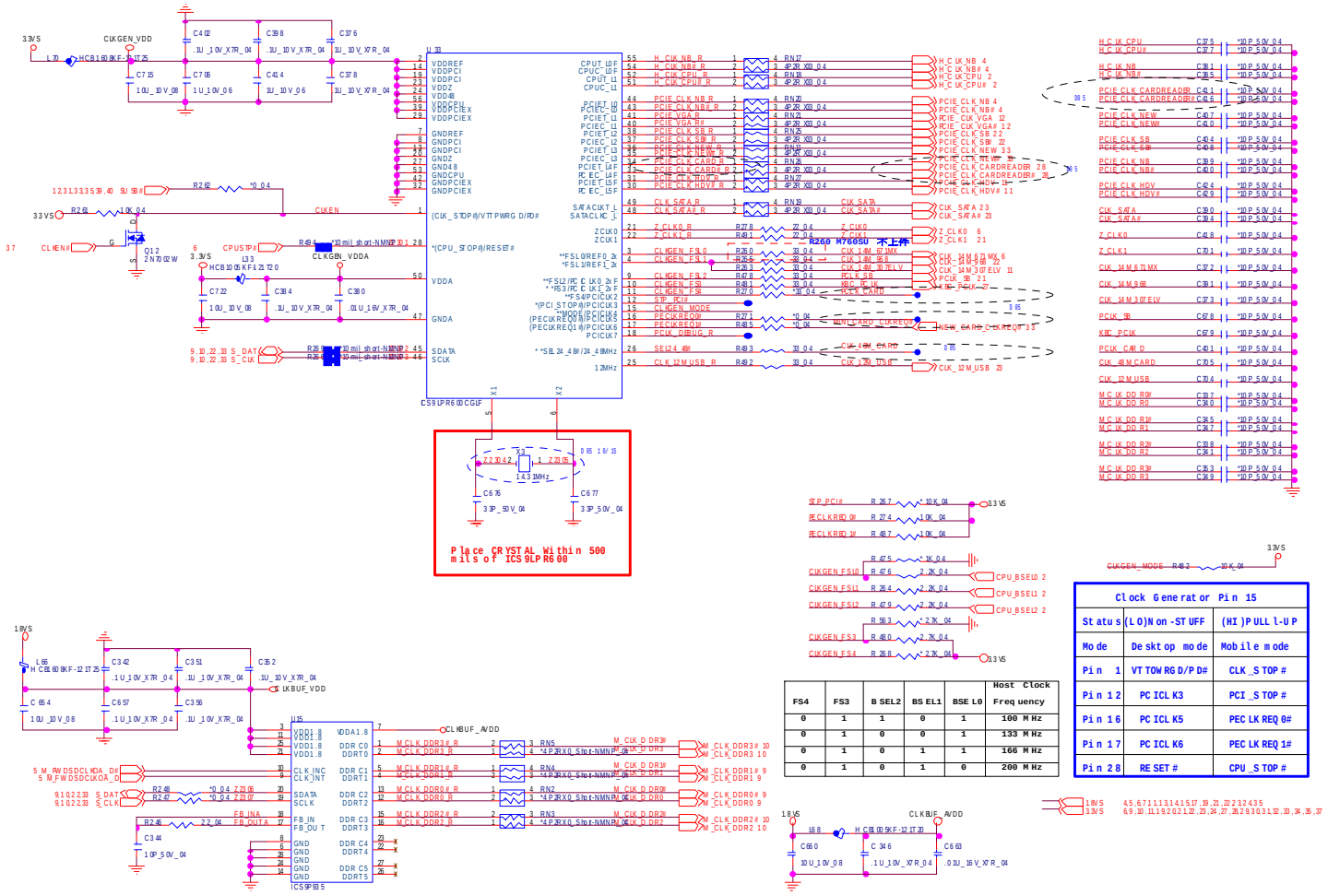


| FS4 | FS3 | BSEL2 | BSEL1 | BSEL0 | Host Clock Frequency |
|---|---|---|---|---|---|
| 0 | 1 | 1 | 0 | 1 | 100 MHz |
| 0 | 1 | 0 | 0 | 1 | 133 MHz |
| 0 | 1 | 0 | 1 | 1 | 166 MHz |
| 0 | 1 | 0 | 1 | 0 | 200 MHz |

| Clock Generator Pin 15 | | |
|---|---|---|
| Status | (LO)Non-STUFF | (HI)PULL-UP |
| Mode | Desktop mode | Mobile mode |
| Pin 1 | VTTOWRG D/PD# | CLK_STOP# |
| Pin 12 | PCICLK3 | PCI_STOP# |
| Pin 16 | PCICLK5 | PECLKREQ0# |
| Pin 17 | PCICLK6 | PECLKREQ1# |
| Pin 28 | RESET# | CPU_STOP# |

**Sheet 24 of 45**
**Clock Generator & Clock Buffer**

# PHY Realtek 8201CL



**Sheet 25 of 45**
**PHY Realtek**
**8201CL**

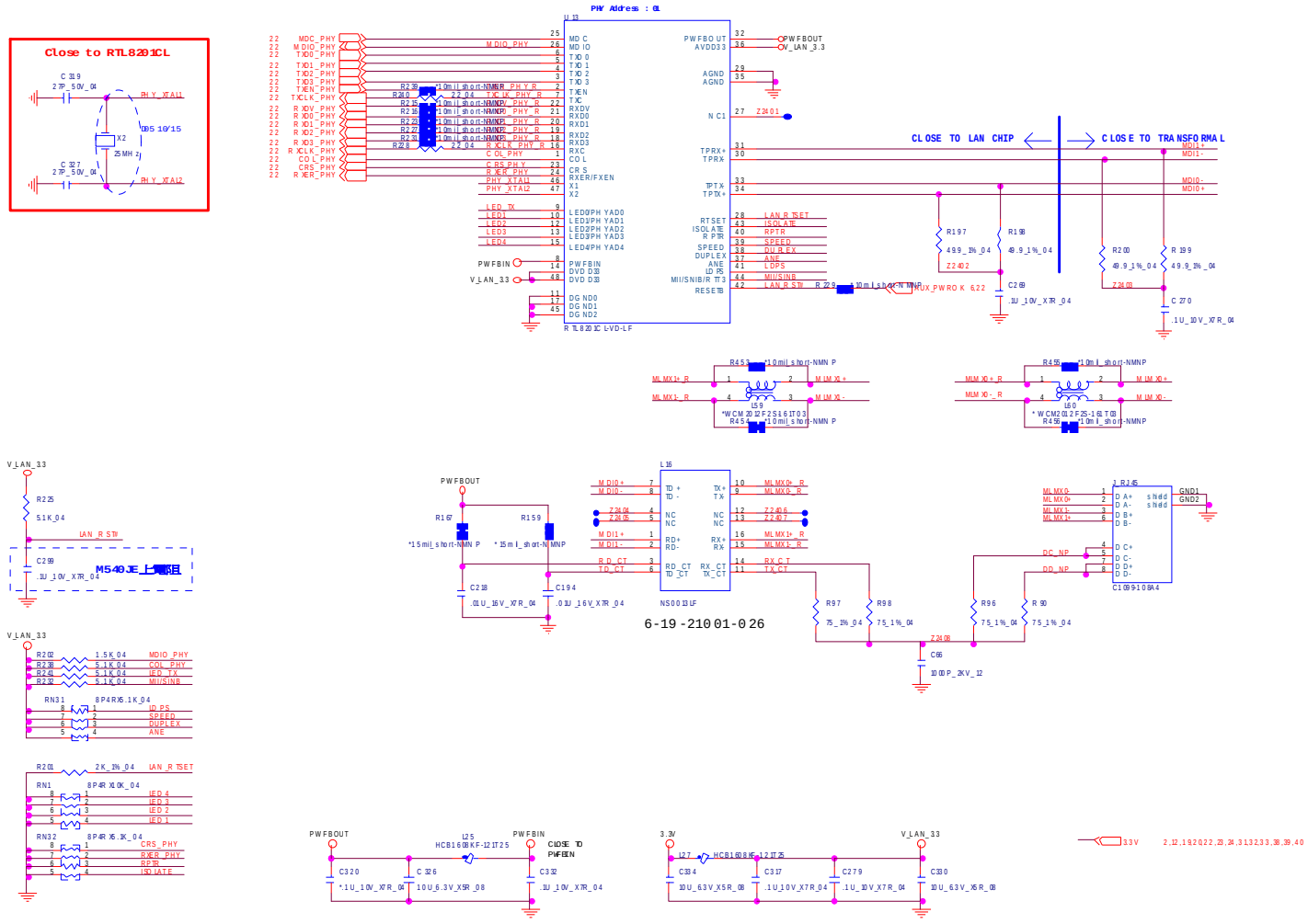

# KBC ITE8512E

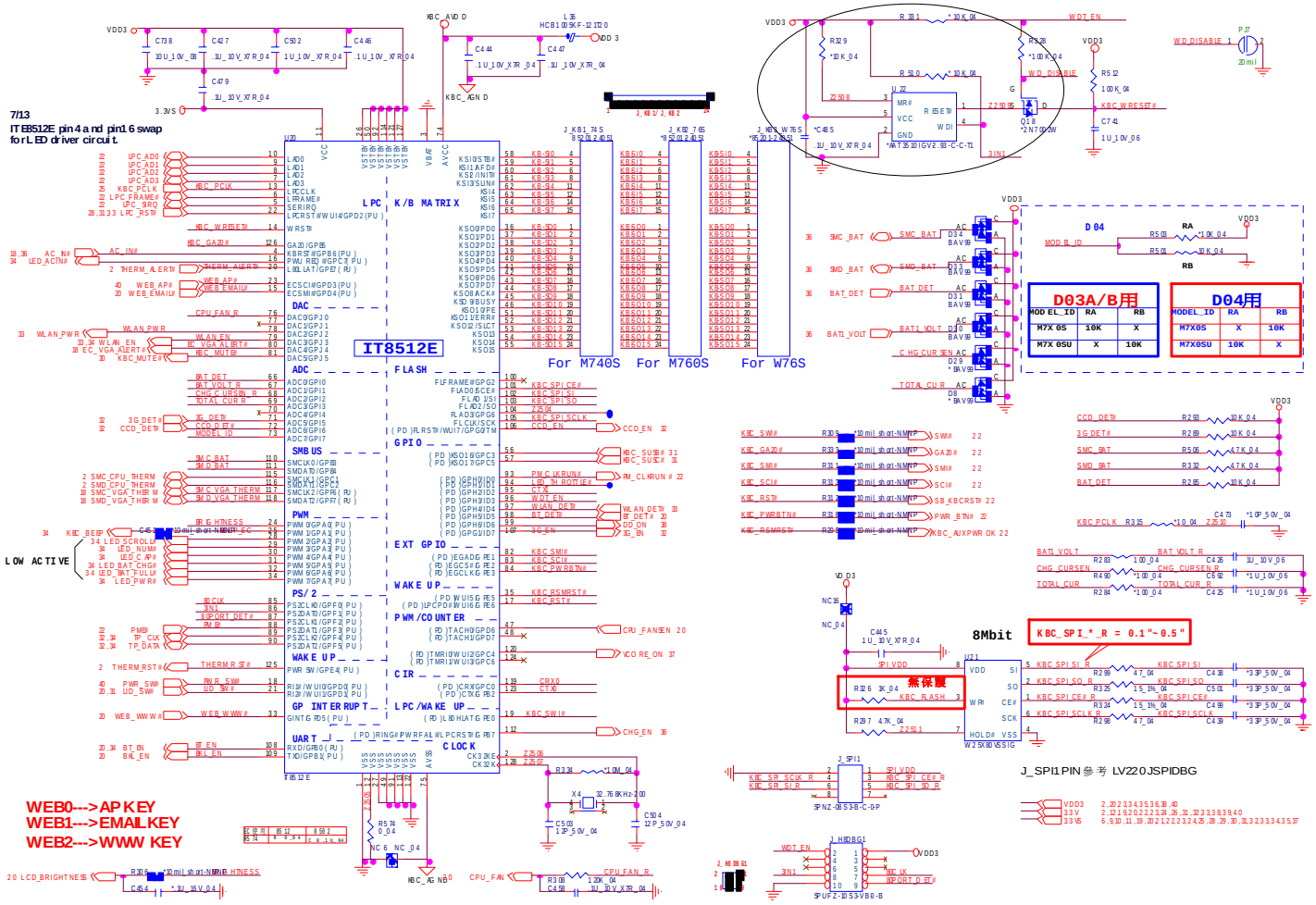


Sheet 26 of 45
KBC ITE8512E

# JMB385, Card Reader



**Sheet 27 of 45**
**JMB385,**
**Card Reader**

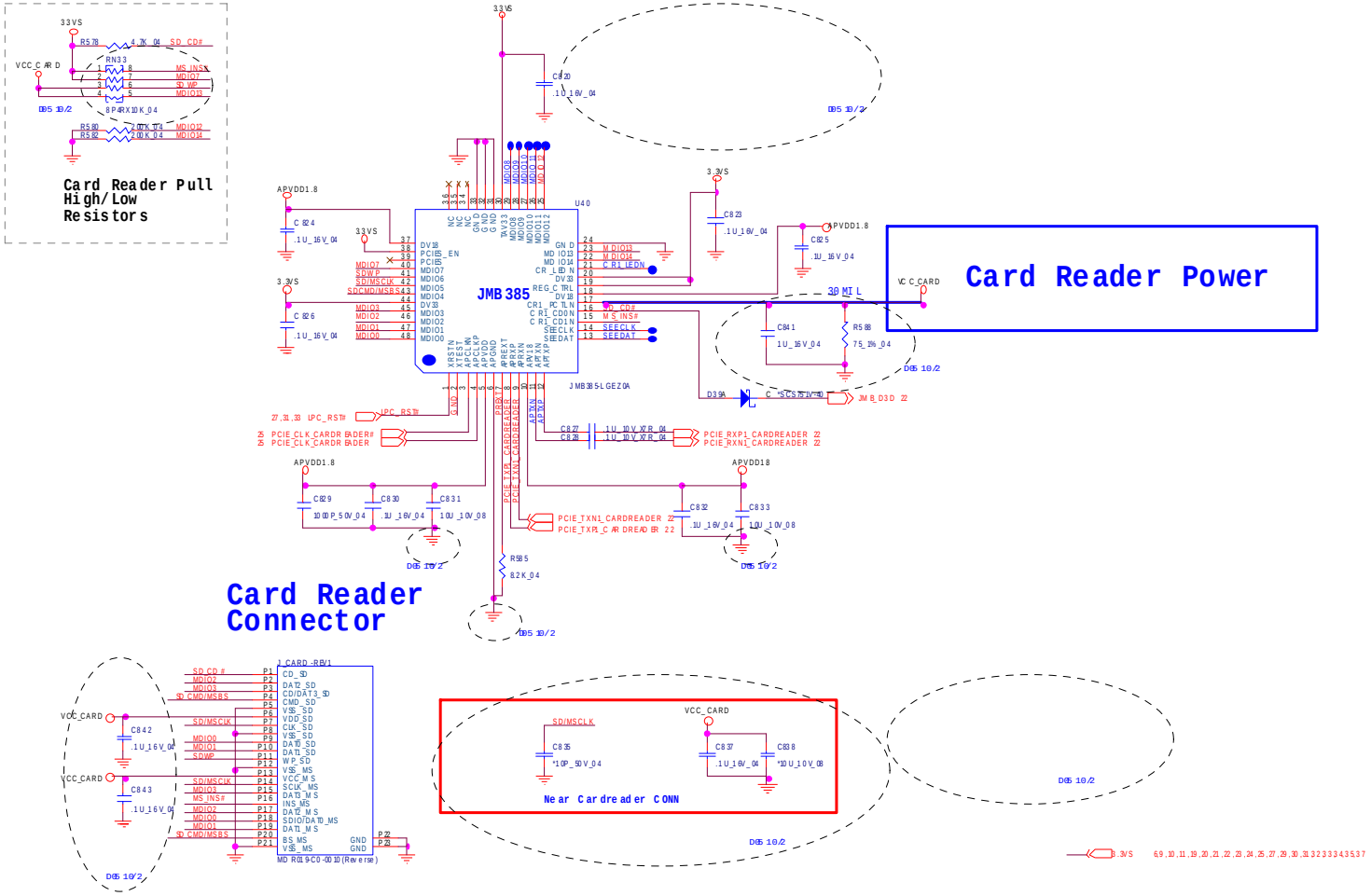

# Audio Codec ALC662

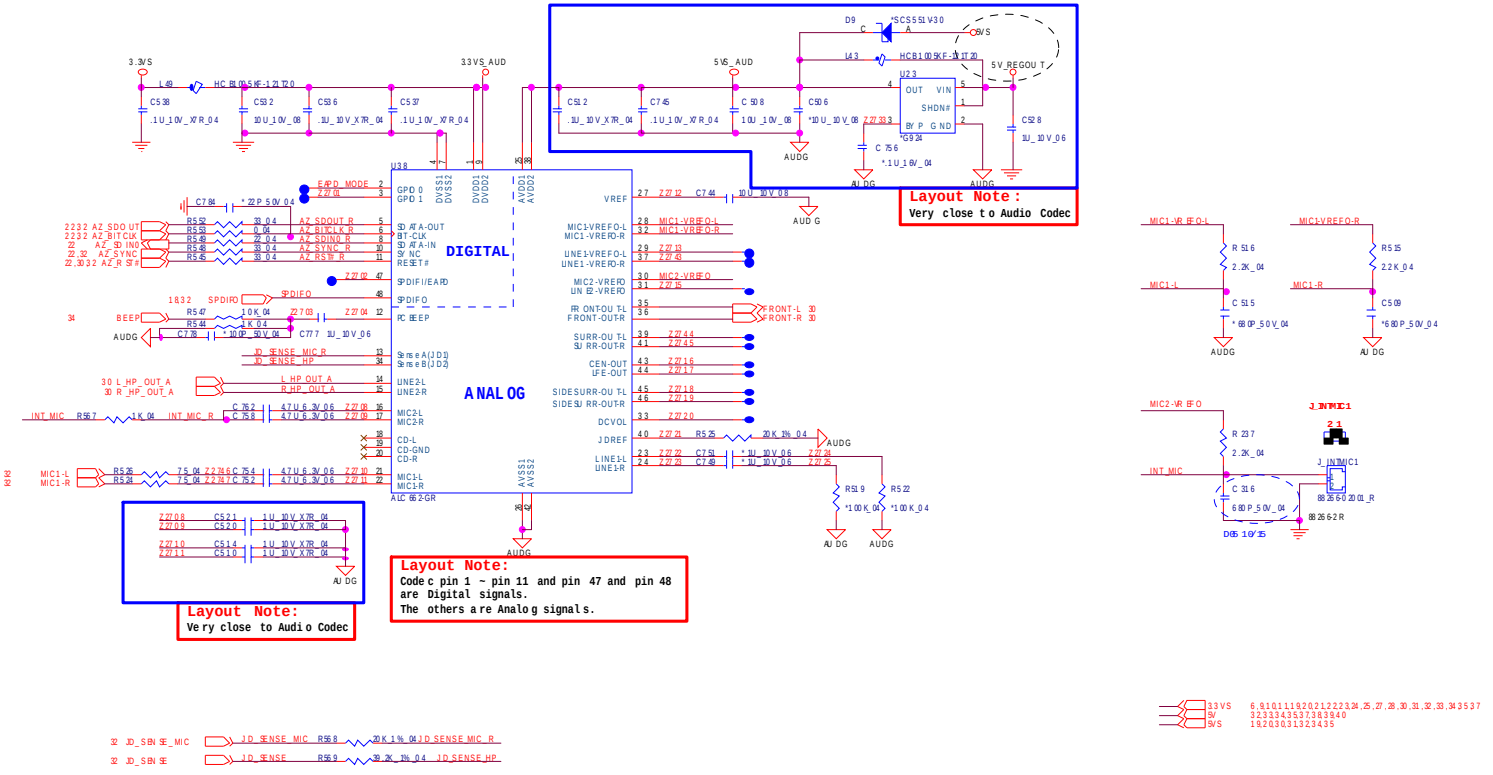


Sheet 28 of 45
Audio Codec
ALC662

# Audio AMP



**Sheet 29 of 45**
**Audio AMP**

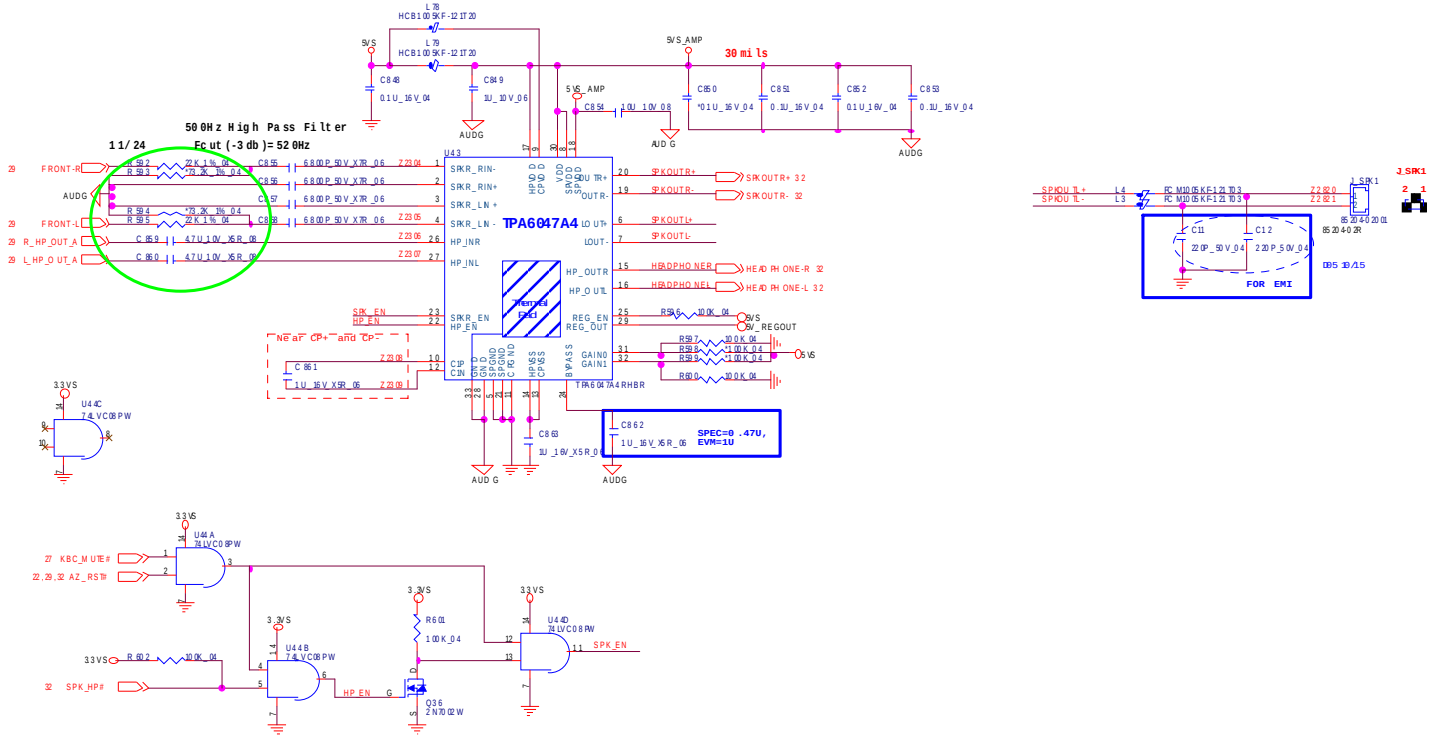


| | Default( L = Mute ) |
|---|---|
| AUDIOGP IO0# | H -> H |
| KBC_MUTE# | L -> H |
| AZ_RST# | L -> H |
| SB_MUTE # | L -> H |

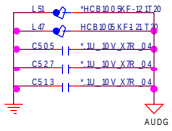


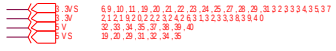

# SATA HDD, PWR, LID

## POWER MANAGMENT

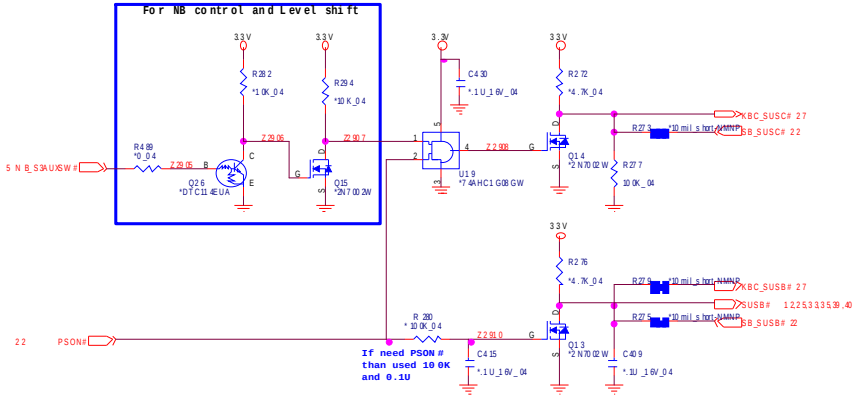


| SIGNAL | S0/S1 | S3 | S4/S5 |
|---|---|---|---|
| S3AUXSW# | 1 | 0 | 1 |
| PSON# | 0 | 1 | 1 |

## POWER GOOD & RESET

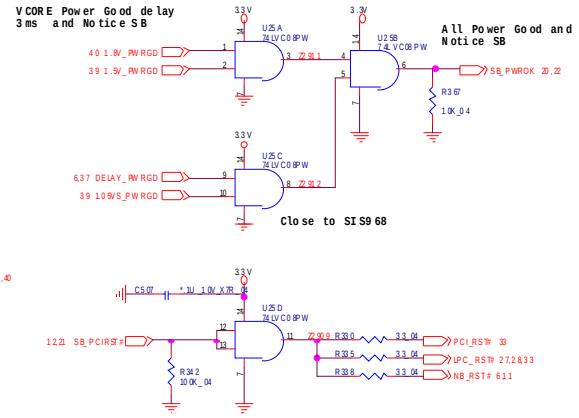


## SATA HDD

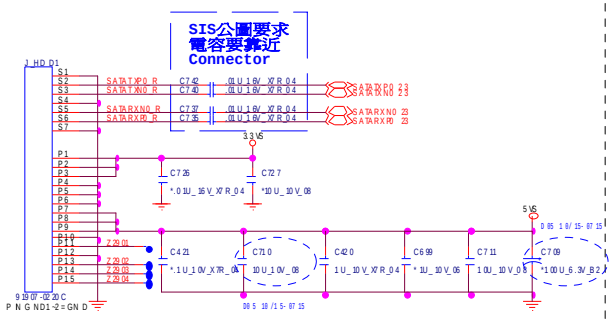


## LID SWITCH IC

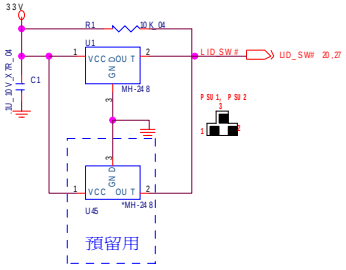


## POWER SWITCH CONNECTER

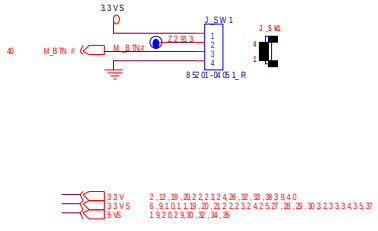


Sheet 30 of 45
SATA HDD, PWR, LID

B.Schematic Diagrams

# Multi I/O, ODD, 3G, Click BD for M74



**Sheet 31 of 45**
**Multi I/O, ODD, 3G, Click BD for M74**

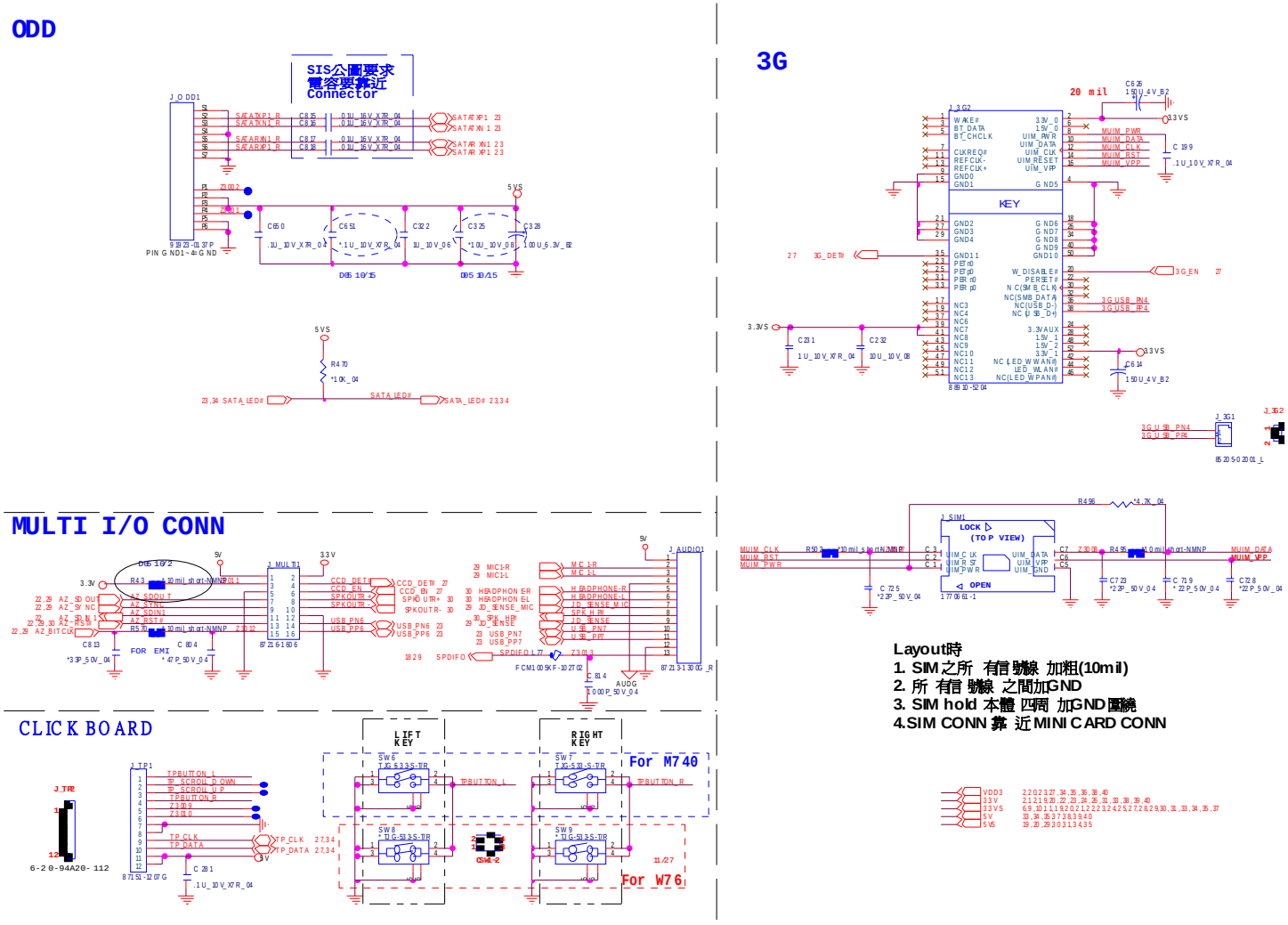


Layout時
1. SIM之所 有信號線 加粗(10mil)
2. 所 有信 號線 之間加GND
3. SIM hold 本體 四周 加GND圍繞
4.SIM CONN 靠 近MINI CARD CONN

# New Card, Mini PCIE, USB

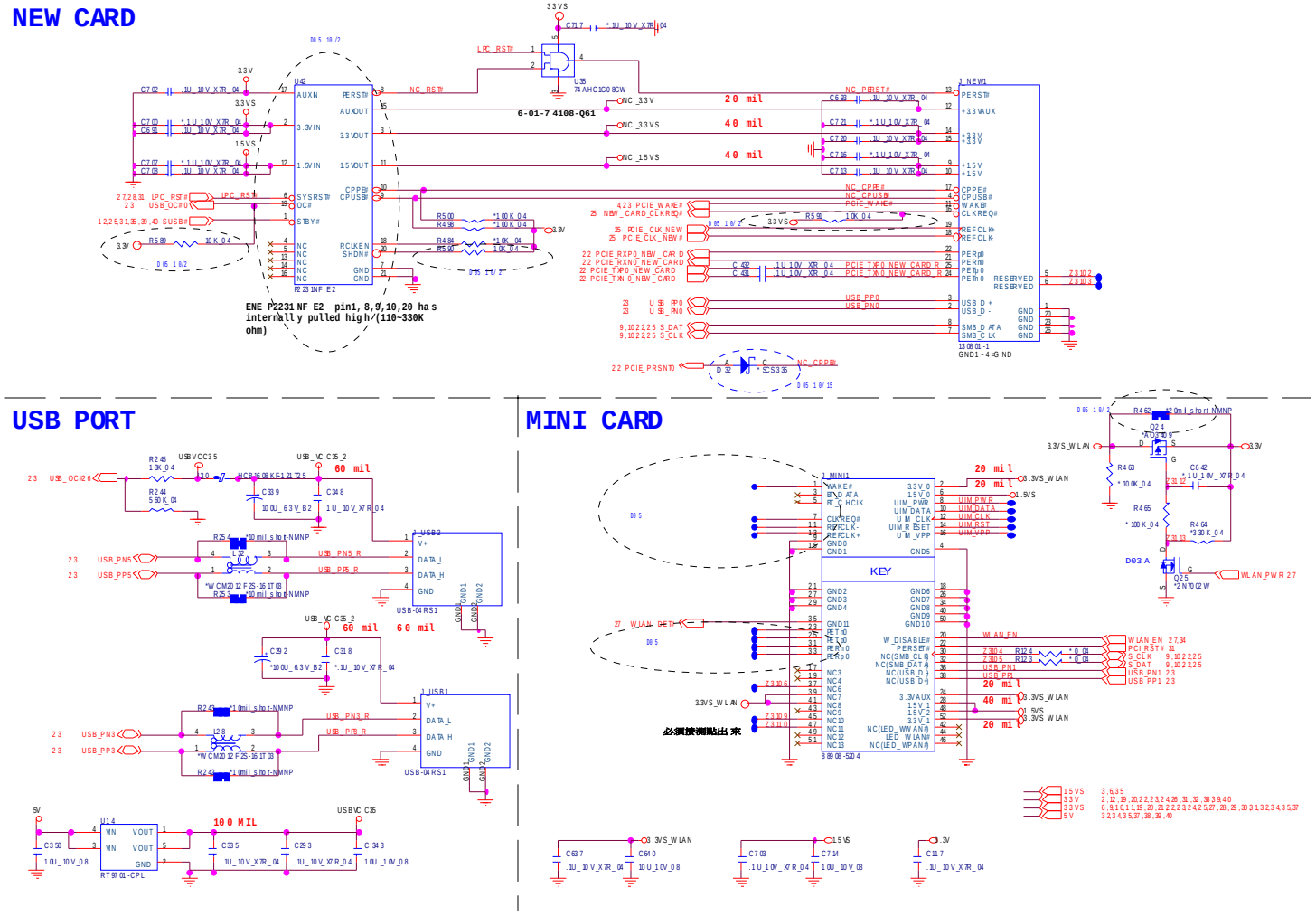


Sheet 32 of 45
New Card,
Mini PCIE, USB

# LED, PC Beep, TP, FP



**Sheet 33 of 45**
**LED, PC Beep, TP, FP**

## LED

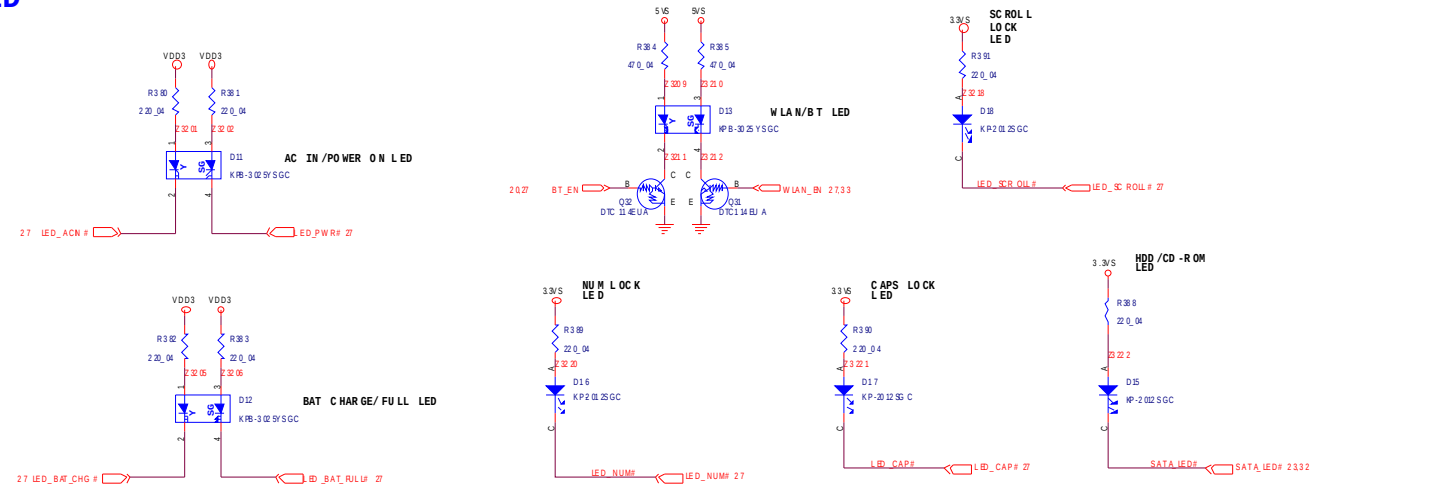


## PC BEEP

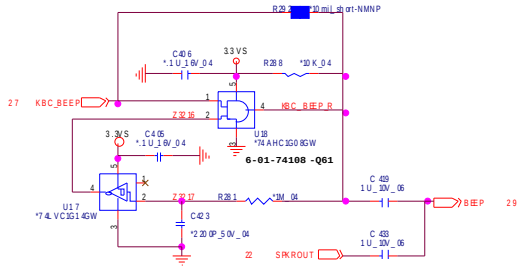

## FP CONN

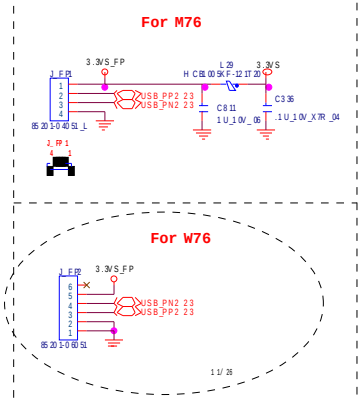


## CLICK CONN For M76

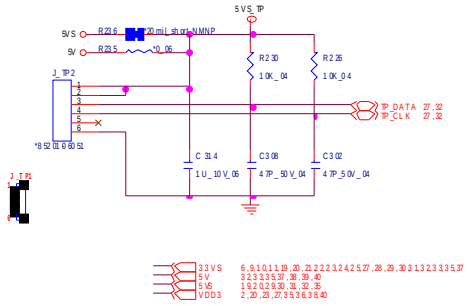

# System/Ext-VGA Power

## 1.2VS,1.5VS,1.8VS,3.3VS,5VS

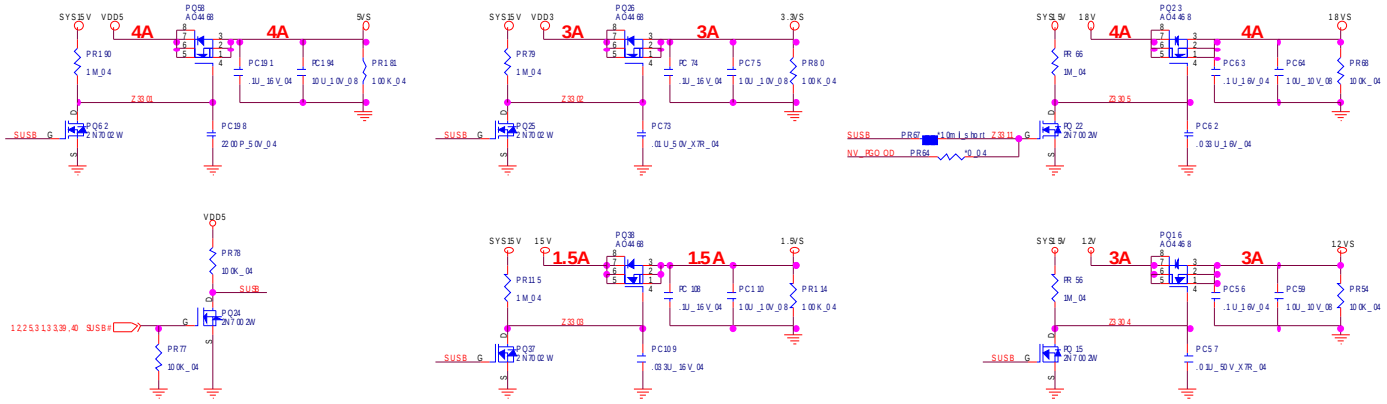


Sheet 34 of 45
System/Ext-VGA Power

## M760US 要上件

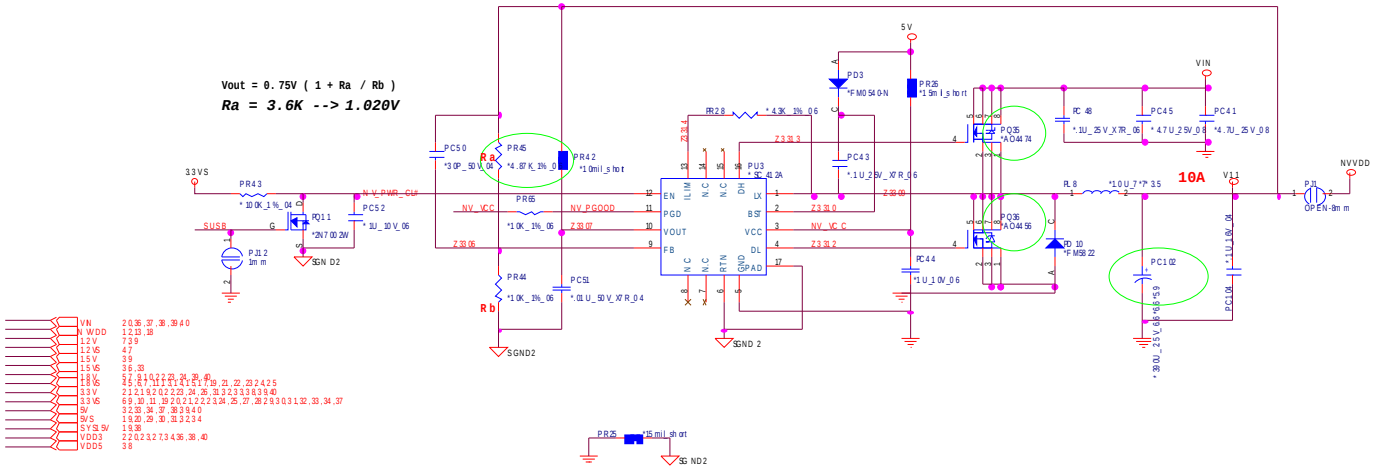

# AC-IN, Charger



**Sheet 35 of 45**
**AC-IN, Charger**

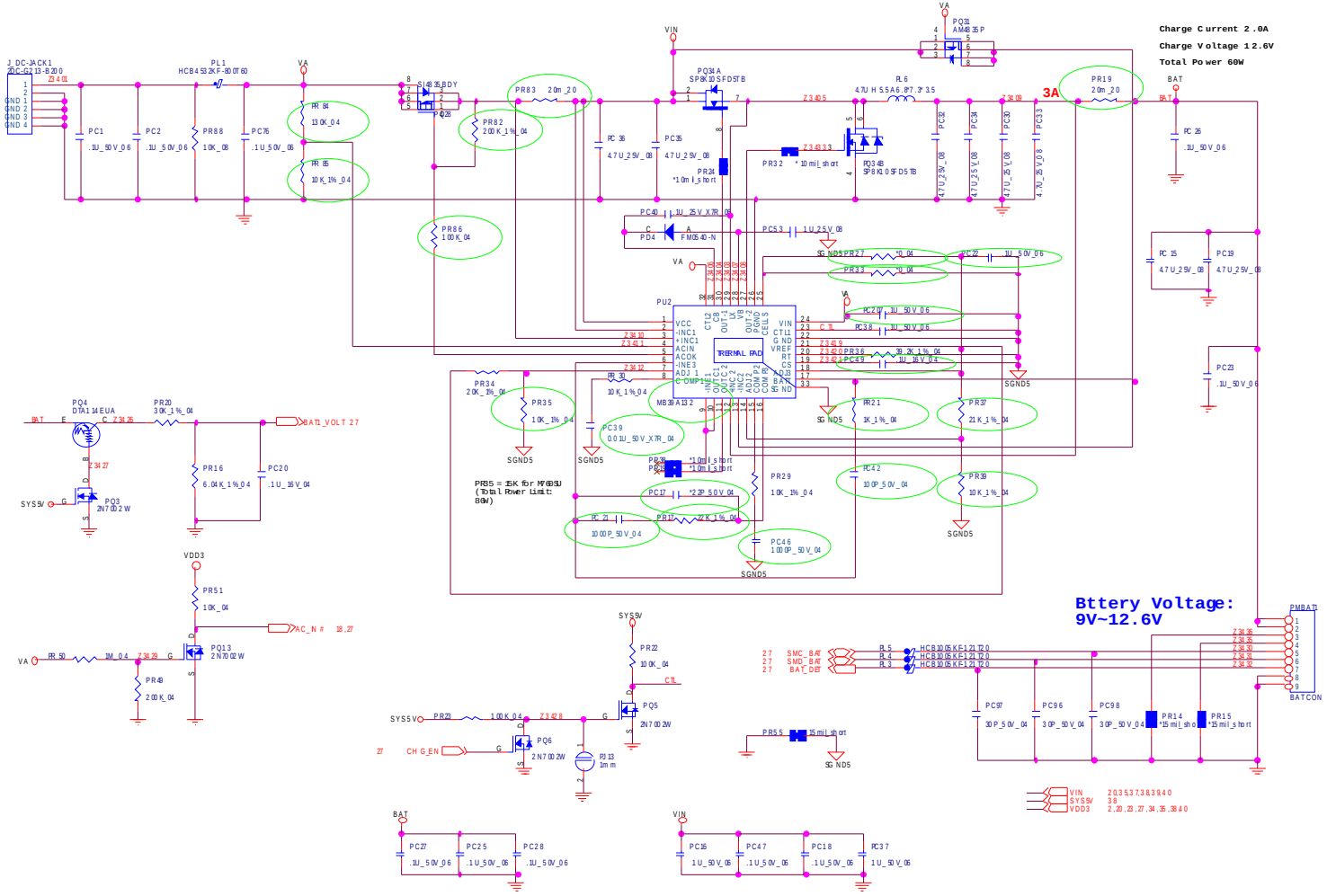

# VCORE

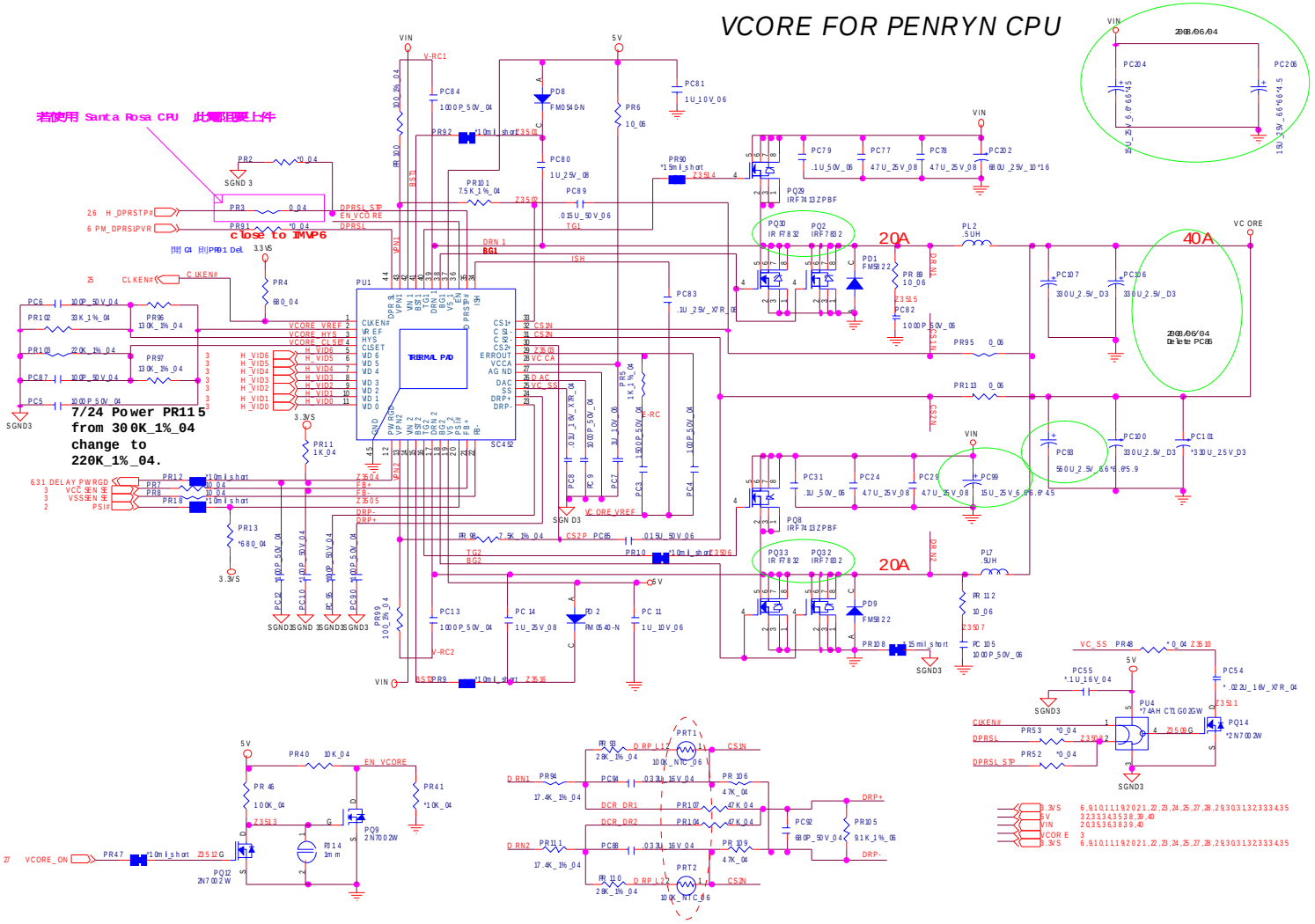


Sheet 36 of 45
VCORE

# VDD3, VDD5)



**Sheet 37 of 45**
**VDD3, VDD5**

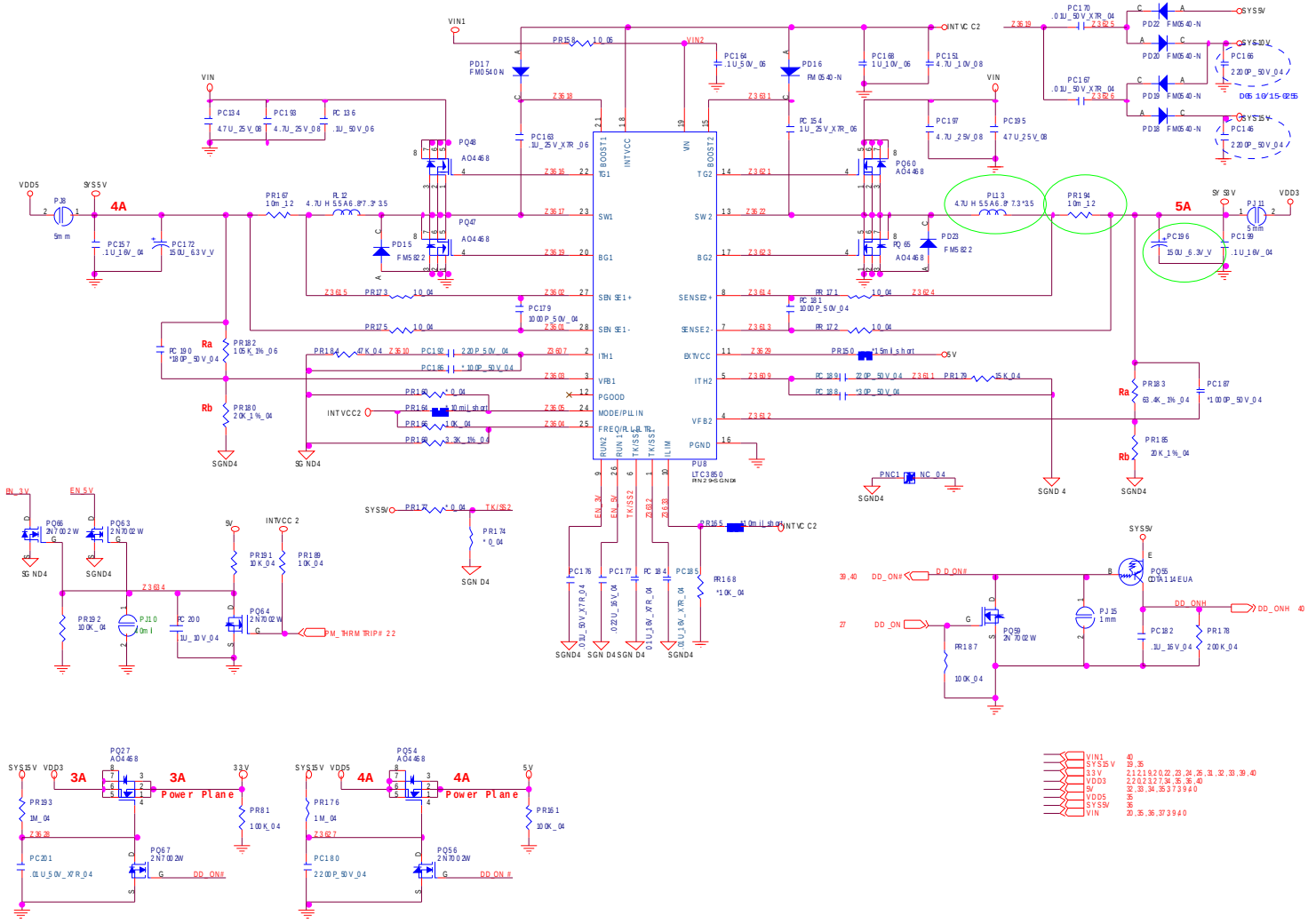

# 1.05VS, 1.2V, 1.5V

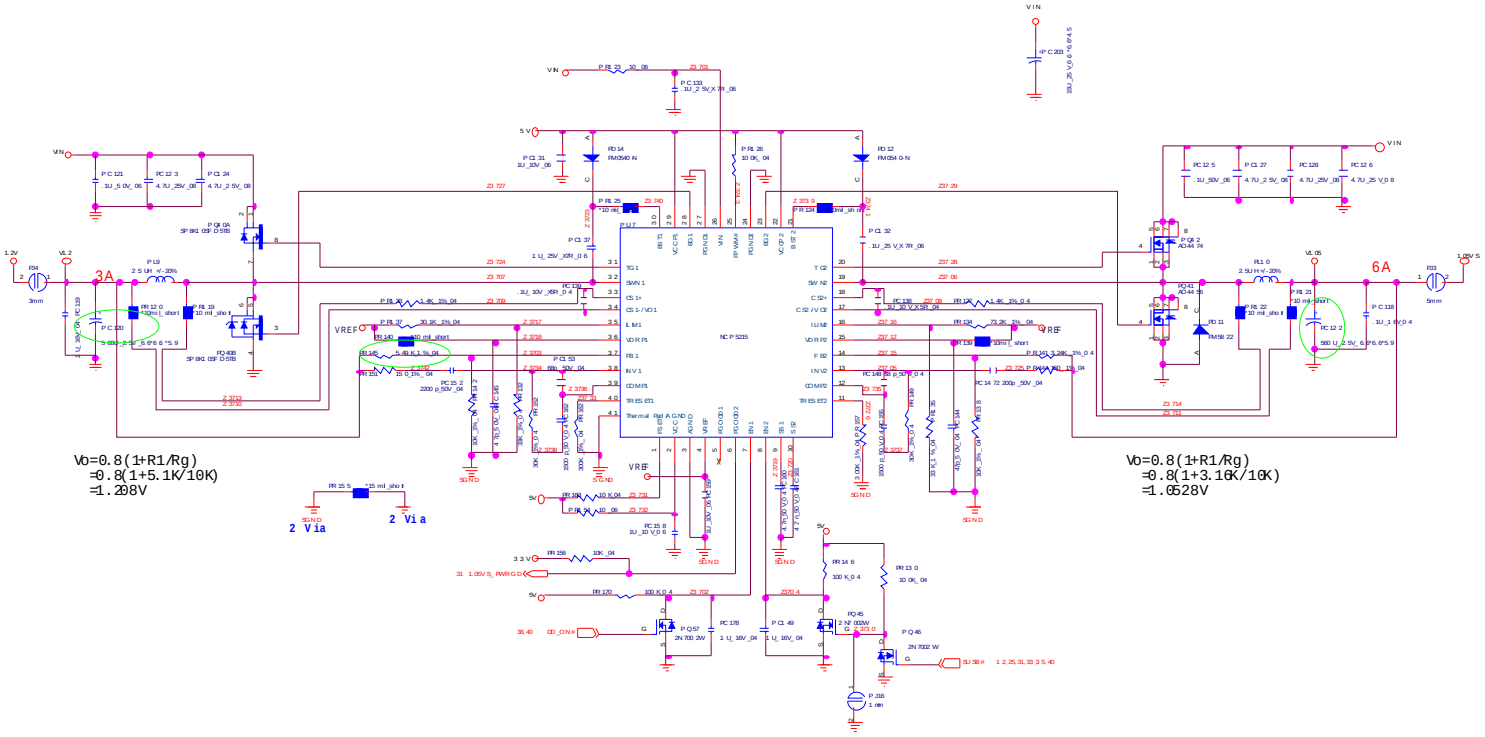


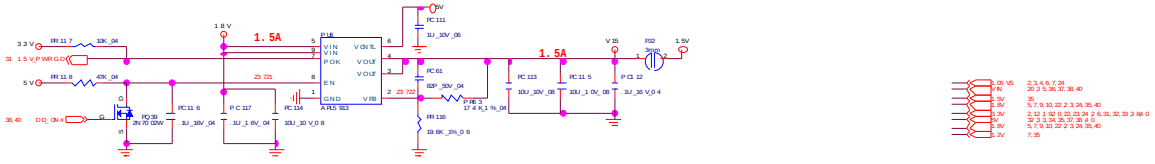


Sheet 38 of 45
1.05VS, 1.2V, 1.5V

# 1.8V, 0.9VS



**Sheet 39 of 45**
**1.8V, 0.9VS**

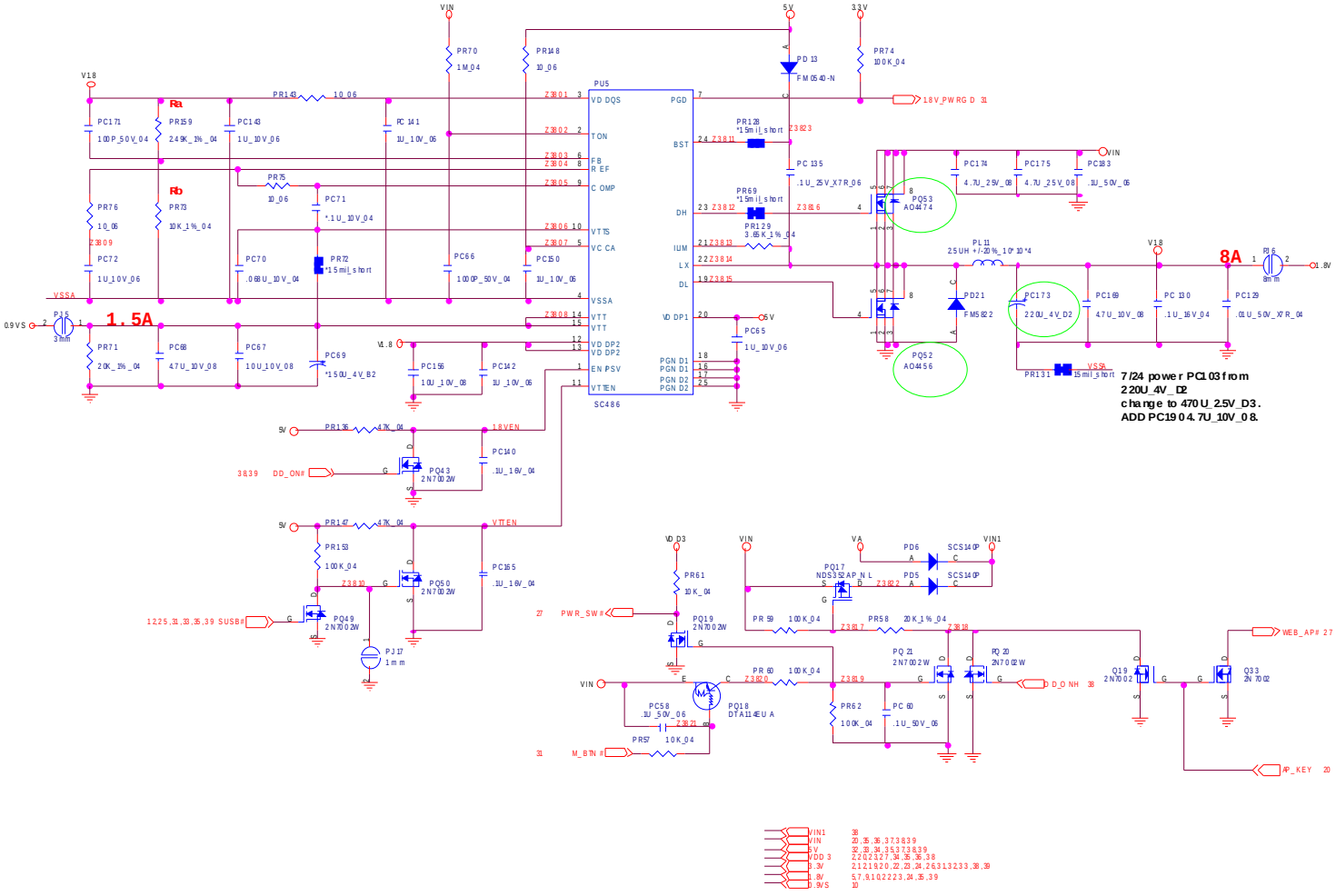

# Click BD, Finger BD for M76

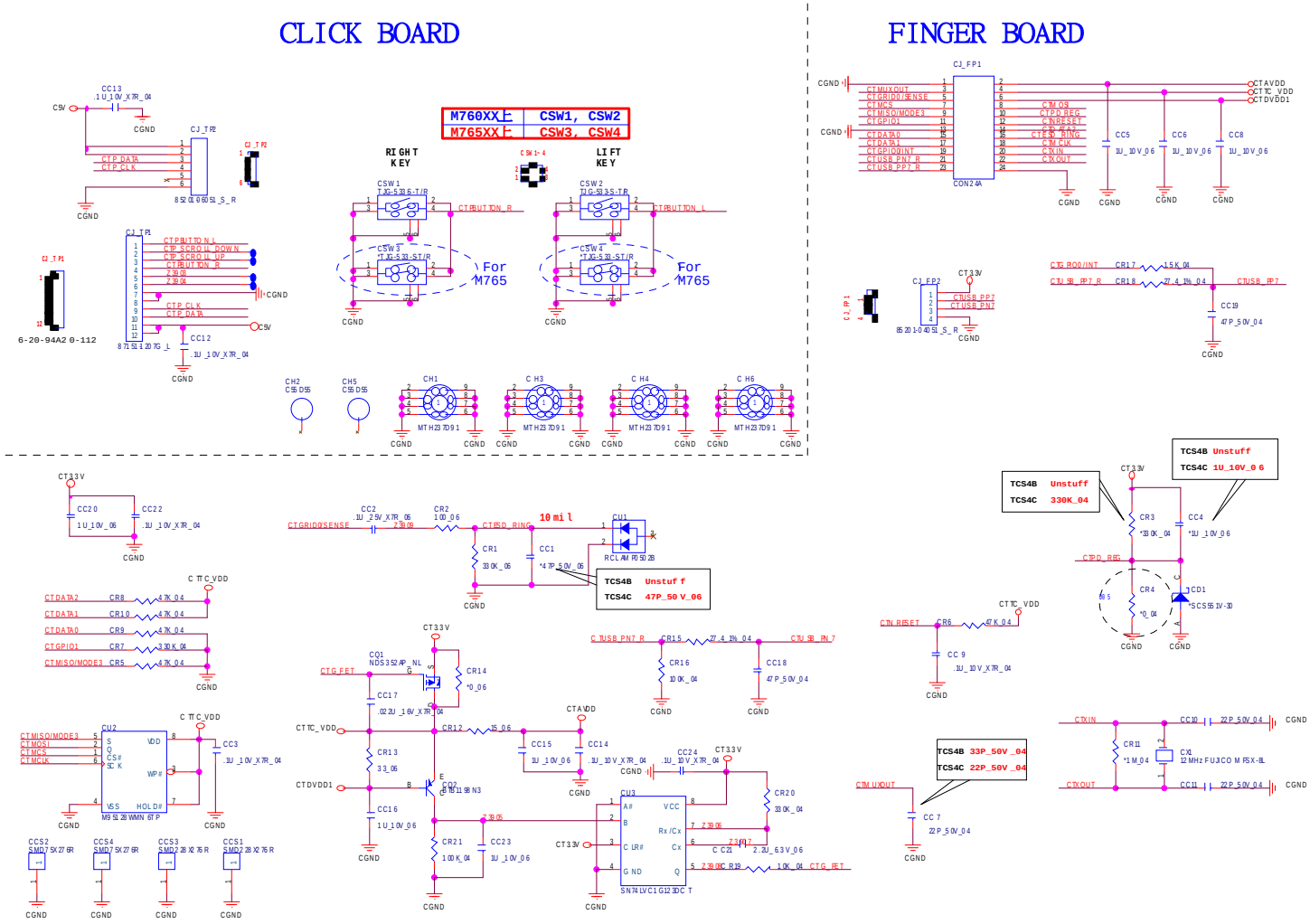


Sheet 40 of 45
Click BD, Finger BD for M76

# Multi Function Board



**Sheet 41 of 45**
**Multi Function Board**

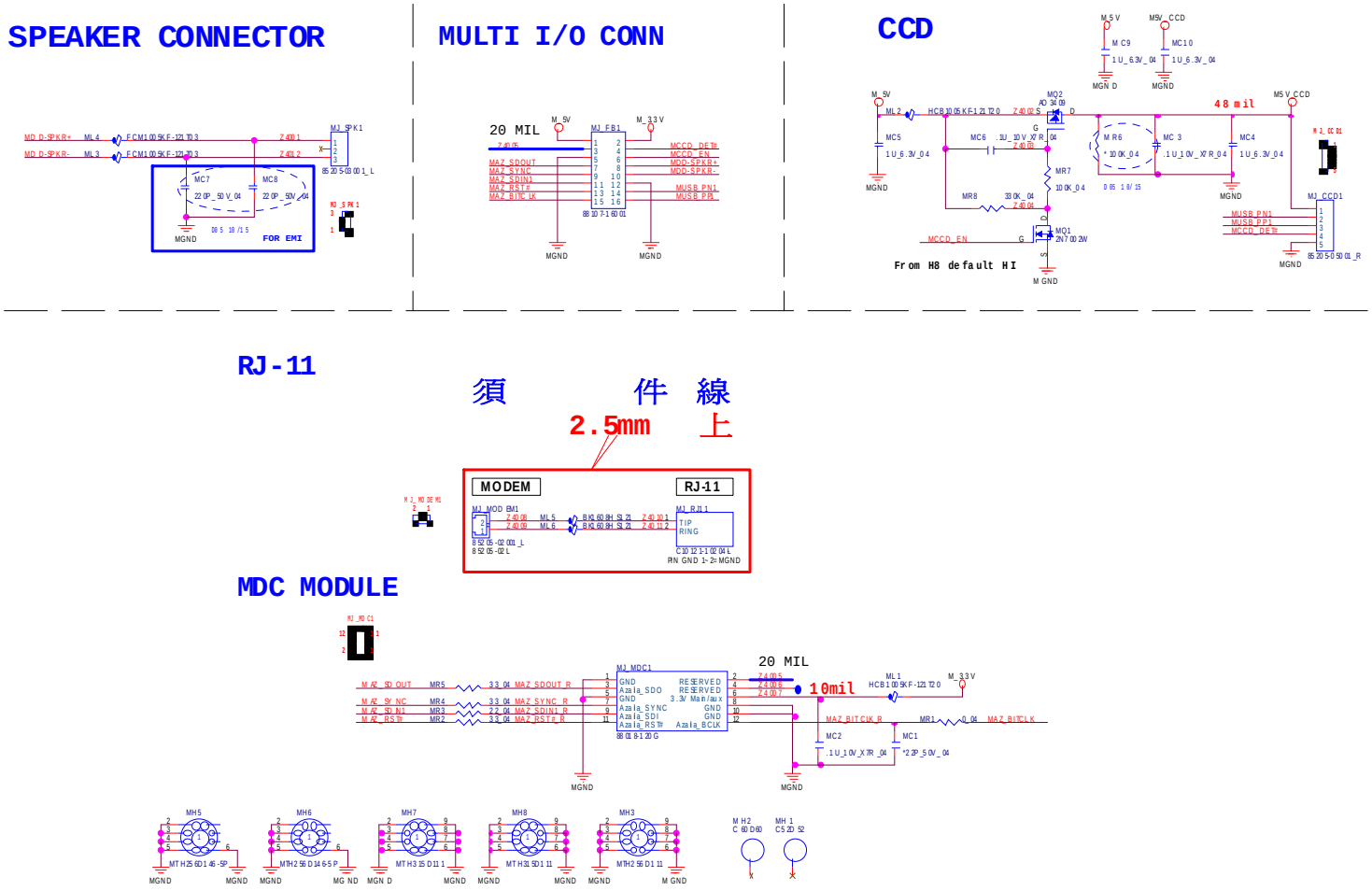

# Audio Board

## USB PORT

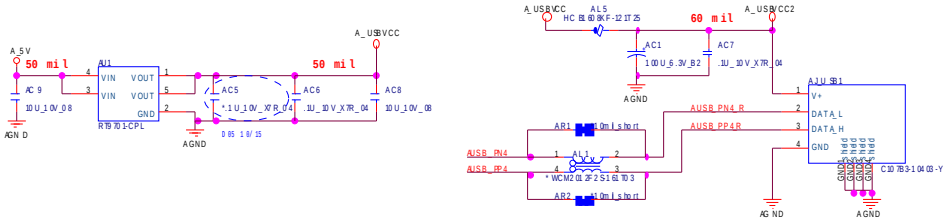


Sheet 42 of 45
Audio Board

## AUDIO JACK

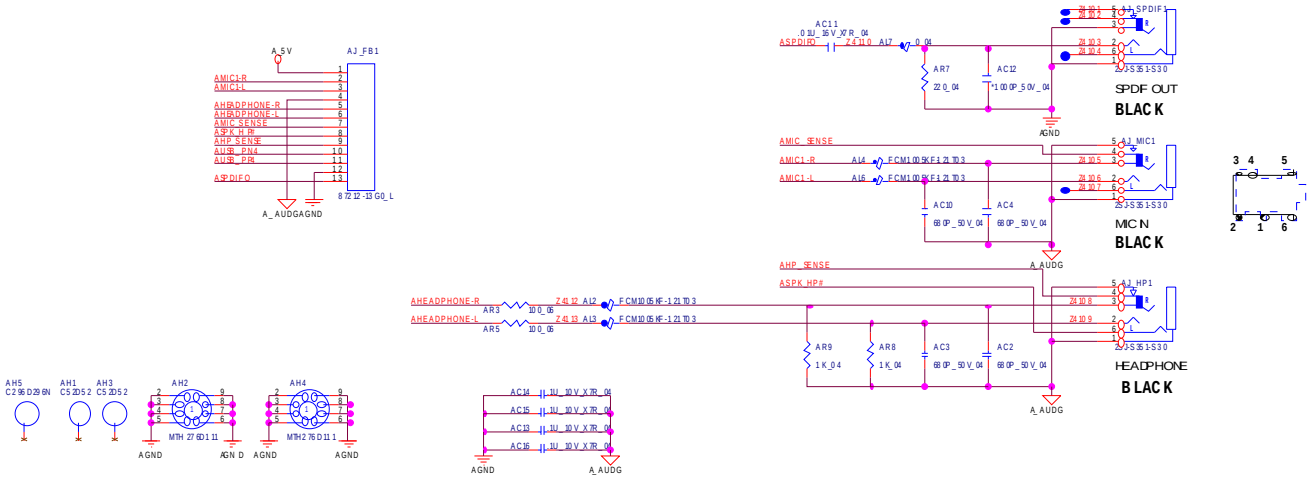

# Finger Sensor Board



**Sheet 43 of 45**
**Finger Sensor Board**

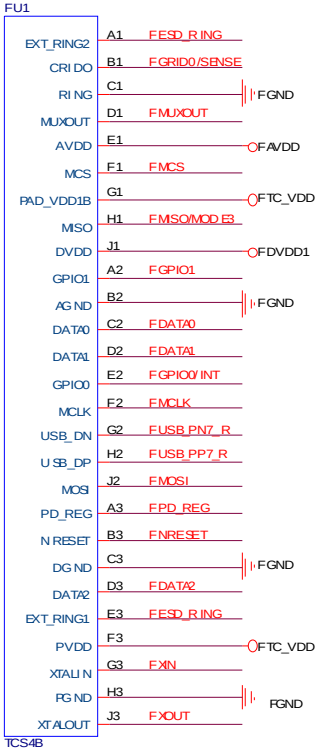


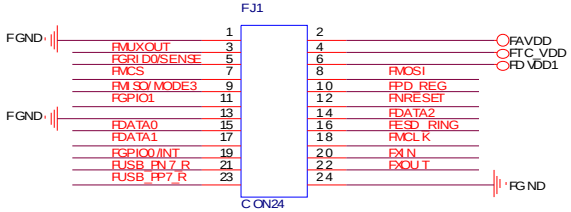


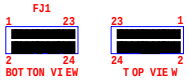

# Power Switch Board for M74

## POWER SW & POWER LED FOR M74

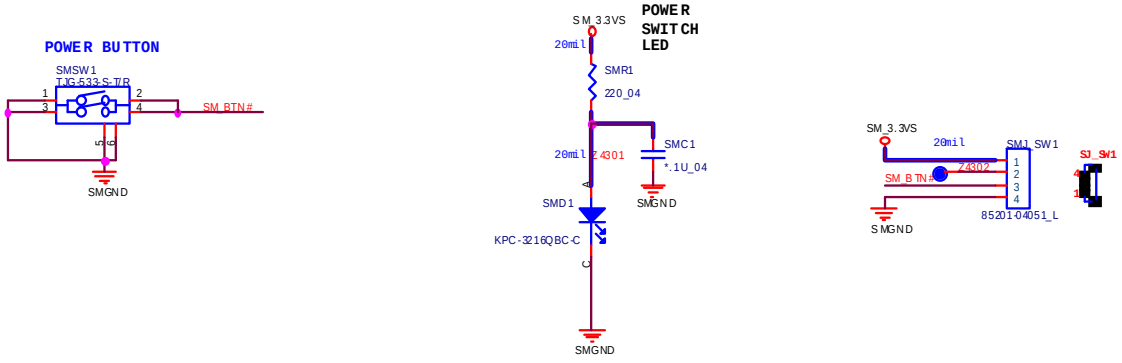


Sheet 44 of 45
Power Switch Board for M74

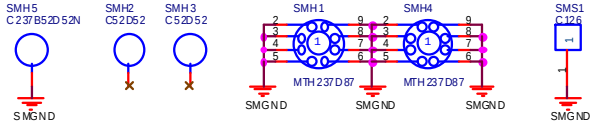


B.Schematic Diagrams

# External ODD Board for W76

## ODD BOARD FOR W76



**Sheet 45 of 45**
**External ODD Board for W76**

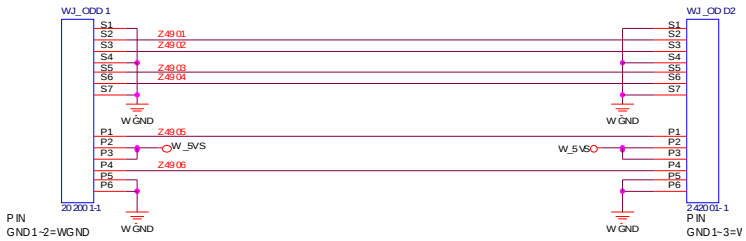


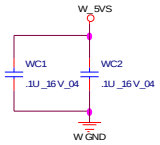


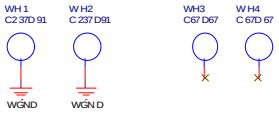

# Appendix C:Updating the FLASH ROM BIOS

## To update the FLASH ROM BIOS you must:

- Download the BIOS update from the web site.
- Unzip the files onto a bootable CD/DVD/USB Flash Drive.
- Reboot your computer from an external CD/DVD/USB Flash Drive.
- Use the flash tools to update the flash BIOS using the commands indicated below.
- Restart the computer booting from the HDD and press **F2** at startup enter the BIOS.
- Load setup defaults from the BIOS and save the default settings and exit the BIOS to restart the computer.
- After rebooting the computer you may restart the computer again and make any required changes to the default BIOS settings.

### Download the BIOS

1. Go to **www.clevo.com.tw** and point to **E-Services** and click **E-Channel**.
2. Use your user ID and password to access the appropriate download area (BIOS), and download the latest BIOS files (the BIOS file will be contained in a batch file that may be run directly once unzipped) for your computer model (**see sidebar for important information on BIOS versions**).

### Unzip the downloaded files to a bootable CD/DVD/ or USB Flash drive

1. Insert a bootable CD/DVD/USB flash drive into the CD/DVD drive/USB port of the computer containing the downloaded files.
2. Use a tool such as Winzip or Winrar to unzip all the BIOS files and refresh tools to your bootable CD/DVD/USB flash drive (you may need to create a bootable CD/DVD with the files using a 3rd party software).

### Set the computer to boot from the external drive

1. With the bootable CD/DVD/USB flash drive containing the BIOS files in your CD/DVD drive/USB port, restart the computer and press **F2** (in most cases) to enter the BIOS.
2. Use the arrow keys to highlight the **Boot** menu.
3. Use the “+” and “-” keys to move boot devices up and down the priority order.
4. Make sure that the CD/DVD drive/USB flash drive is set first in the boot priority of the BIOS.
5. Press **F10** to save any changes you have made and exit the BIOS to restart the computer.

**BIOS Version**

Make sure you download the latest correct version of the BIOS appropriate for the computer model you are working on.

**You should only download BIOS versions that are V1.01.XX or higher** as appropriate for your computer model.

Note that BIOS versions are not backward compatible and therefore **you may not downgrade your BIOS to an older version** after upgrading to a later version (e.g if you upgrade a BIOS to ver 1.01.05, you **MAY NOT** then go back and flash the BIOS to ver 1.01.04).

## Use the flash tools to update the BIOS

1. Make sure you are not loading any memory management programs such as HIMEM by holding the **F8** key as you see the message "**Starting MS-DOS**". You will then be prompted to give "**Y**" or "**N**" responses to the programs being loaded by DOS. Choose "N" for any memory management programs.
2. You should now be at the DOS prompt e.g: DISK **C**:\> (C is the designated drive letter for the CD/DVD drive/USB flash drive).
3. **Type the following command** at the DOS prompt:

   **C:\> XXX.bat**

4. The utility will then proceed to flash the BIOS.
5. You should then be prompted to press any key to restart the system or turn the power off, and then on again but make sure you remove the CD/DVD/USB flash drive from the CD/DVD drive/USB port before the computer restarts.

## Restart the computer (booting from the HDD)

1. With the CD/DVD/USB flash drive removed from the CD/DVD drive/USB port the computer should restart from the HDD.
2. Press **F2** as the computer restarts to enter the BIOS.
3. Use the arrow keys to highlight the **Exit** menu.
4. Select **Load Setup Defaults** (or press **F9**) and select "**Yes**" to confirm the selection.
5. Press **F10** to save any changes you have made and exit the BIOS to restart the computer.

## Your computer is now running normally with the updated BIOS

You may now enter the BIOS and make any changes you require to the default settings.